# ALFA ROMEO

## ALFA 145 + 146 — 07/94→ 01/01

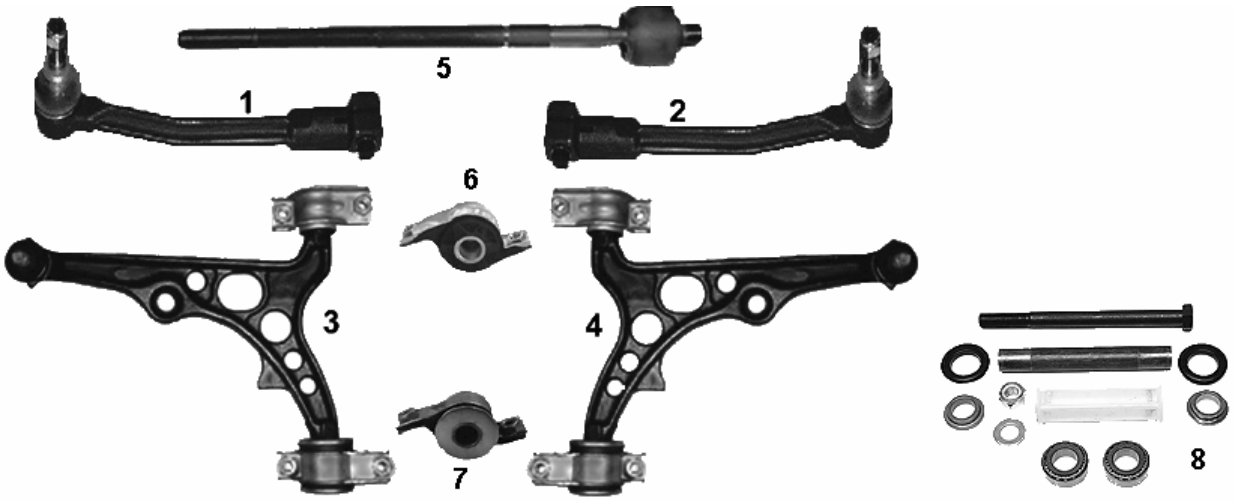


| NR | MAPCO | REF | | | ← | → | ↑ | ↓ | | | NEW | INFO |
|---|---|---|---|---|---|---|---|---|---|---|---|---|
| 1 | **19013** | 60608979 | ✓ | | ✓ | | | | ✓ | ✓ | | M18x1,5RHT |
| 2 | **19014** | 60608980 | ✓ | | | ✓ | | | ✓ | ✓ | | M18x1,5LHT |
| 3 | **19009** | 60813013<br>60809813 | ✓ | | ✓ | | | | ✓ | ✓ | | |
| 4 | **19010** | 60813014<br>60809814 | ✓ | | | ✓ | | | ✓ | ✓ | | |
| 5 | **49053** | 9947718 | ✓ | | ✓ | ✓ | | | ✓ | ✓ | | 01/96→ M14x1,5RHT |
| 6 | **33019** | 7601065 | ✓ | | ✓ | | | | ✓ | ✓ | ✓ | |
| 7 | **33035** | 7601068 | ✓ | | | ✓ | | | ✓ | ✓ | ✓ | |
| 8 | **34054** | | | ✓ | ✓ | ✓ | | | ✓ | ✓ | | |

## ALFA 147

01/01→

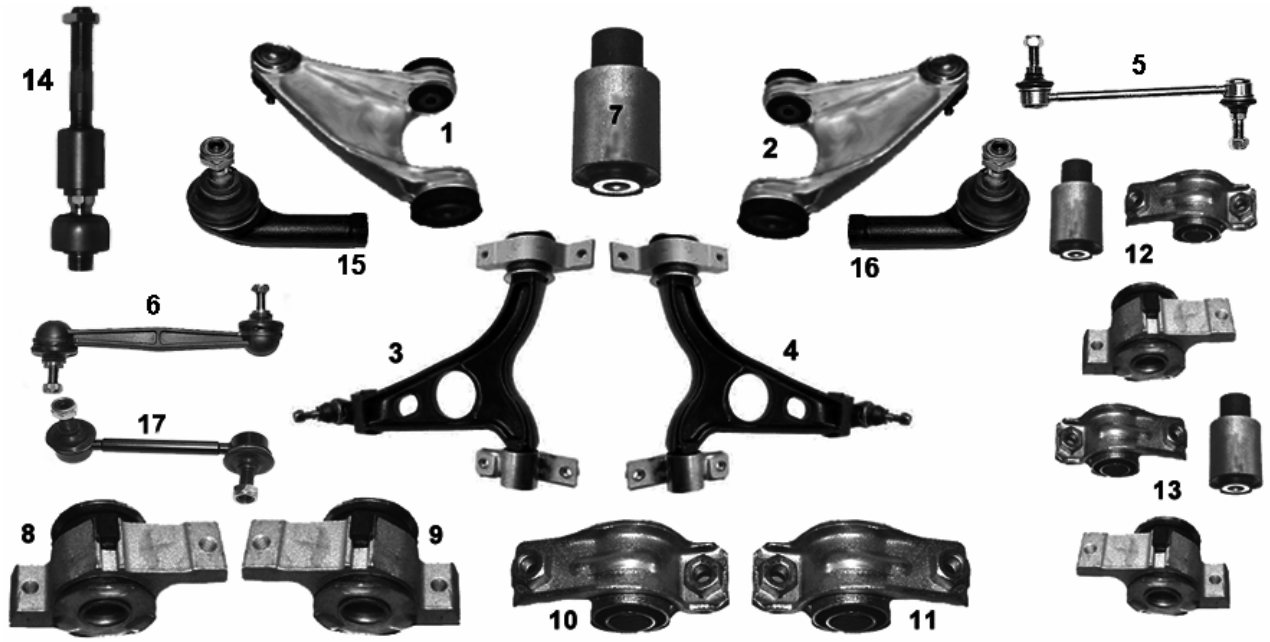


| NR | MAPCO | REF | | | ← | → | ↑ | ↓ | | | NEW | INFO |
|---|---|---|---|---|---|---|---|---|---|---|---|---|
| 1 | 49027 | 6065 1939 | ✓ | | ✓ | | ✓ | | ✓ | ✓ | | |
| 2 | 49026 | 6065 1940 | ✓ | | | ✓ | ✓ | | ✓ | ✓ | | |
| 3 | 49028 | 6065 2465 | ✓ | | ✓ | | | | ✓ | ✓ | | |
| 4 | 49029 | 6065 2466 | ✓ | | | ✓ | | | ✓ | ✓ | | |
| 5 | 49030 | 6062 5029 | ✓ | | ✓ | ✓ | | | ✓ | ✓ | | |
| 6 | 49031 | 6061 3575 | | ✓ | ✓ | ✓ | | | ✓ | ✓ | | |
| 7 | 33007 | | ✓ | | ✓ | ✓ | | ✓ | ✓ | ✓ | | |
| 8 | 33008 | | ✓ | | ✓ | | | | ✓ | ✓ | | aussen/outside |
| 9 | 33010 | | ✓ | | | ✓ | | | ✓ | ✓ | | aussen/outside |
| 10 | 33013 | | ✓ | | ✓ | | | | ✓ | ✓ | | innen/inner |
| 11 | 33014 | | ✓ | | | ✓ | | | ✓ | ✓ | | innen/inner |
| 12 | 19231 | | ✓ | | ✓ | | | ✓ | ✓ | ✓ | | Kit |
| 13 | 19232 | | ✓ | | | ✓ | | ✓ | ✓ | ✓ | | Kit |
| 14 | 19018 | 994 7923 | ✓ | | ✓ | ✓ | | | ✓ | ✓ | | |
| 15 | 19029 | 994 7919 | ✓ | | ✓ | | | | ✓ | ✓ | | |
| 16 | 19030 | 994 7920 | ✓ | | | ✓ | | | ✓ | ✓ | | |
| 17 | 49049HPS | 4655 5183 | | ✓ | ✓ | ✓ | | | ✓ | ✓ | | |

## ALFA 155 1992→ 12/97

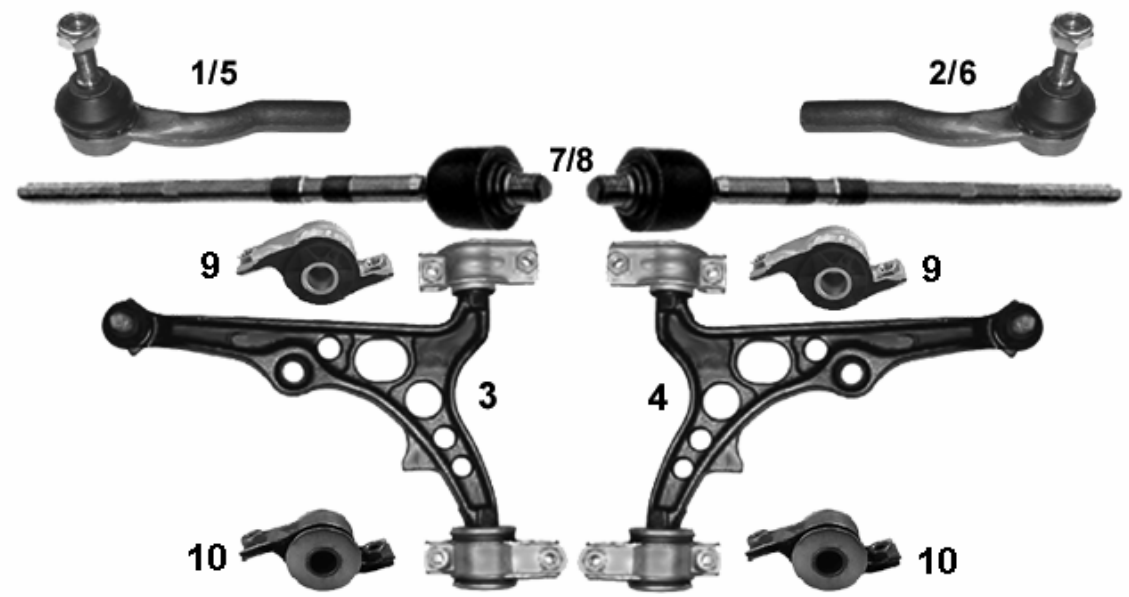


| NR | MAPCO | REF | | | ← | → | ↑ | ↓ | | | NEW | INFO |
|---|---|---|---|---|---|---|---|---|---|---|---|---|
| 1 | 19011 | 6056 5706 | ✓ | | ✓ | | | | ✓ | ✓ | | ✓ 2.0 Turbo M12x1,5RHT |
| 2 | 19012 | 6056 5705 | ✓ | | | ✓ | | | ✓ | ✓ | | ✓ 2.0 Turbo M12x1,5RHT |
| 3 | 19009 | 6081 3013<br>6080 9813 | ✓ | | ✓ | | | | ✓ | ✓ | | |
| 4 | 19010 | 6081 3014<br>6080 9814 | ✓ | | | ✓ | | | ✓ | ✓ | | |
| 5 | 19052 | 759 1216 | ✓ | | ✓ | | | | ✓ | ✓ | | STOP 2.0 Turbo M12x1,5RHT |
| 6 | 19053 | 759 1215 | ✓ | | | ✓ | | | ✓ | ✓ | | STOP 2.0 Turbo M12x1,5RHT |
| 7 | 19016 | 994 4452 | ✓ | | ✓ | | | | ✓ | | | |
| 8 | 19017 | 994 7361 | ✓ | | | ✓ | | | | ✓ | | |
| 9 | 33019 | 7601065 | ✓ | | ✓ | ✓ | | | ✓ | ✓ | ✓ | |
| 10 | 33035 | 7601068 | ✓ | | ✓ | ✓ | | | ✓ | ✓ | ✓ | |
| | | | | | | | | | | | | |

## ALFA 156 (932) 09/97→ 10/00

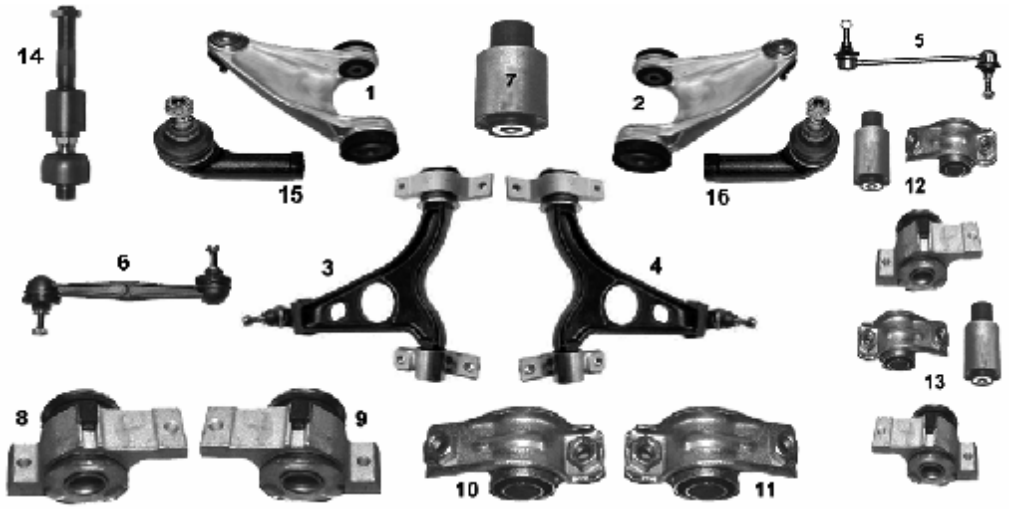


| NR | MAPCO | REF | | | ← | → | ↑ | ↓ | | | NEW | INFO |
|---|---|---|---|---|---|---|---|---|---|---|---|---|
| 1 | 49027 | 6065 1939 | ✓ | | ✓ | | ✓ | | ✓ | ✓ | | |
| 2 | 49026 | 6065 1940 | ✓ | | | ✓ | ✓ | | ✓ | ✓ | | |
| 3 | 49028 | 6065 2465 | ✓ | | ✓ | | | | ✓ | ✓ | | |
| 4 | 49029 | 6065 2466 | ✓ | | | ✓ | | | ✓ | ✓ | | |
| 5 | 49030 | 6062 5029 | ✓ | | ✓ | ✓ | | | ✓ | ✓ | | |
| 6 | 49031 | 6061 3575 | | ✓ | ✓ | ✓ | | | ✓ | ✓ | | |
| 7 | 33007 | | ✓ | | ✓ | ✓ | | ✓ | ✓ | ✓ | | |
| 8 | 33008 | | ✓ | | ✓ | | | | ✓ | ✓ | | aussen/outside |
| 9 | 33010 | | ✓ | | | ✓ | | | ✓ | ✓ | | aussen/outside |
| 10 | 33013 | | ✓ | | ✓ | | | | ✓ | ✓ | | innen/inner |
| 11 | 33014 | | ✓ | | | ✓ | | | ✓ | ✓ | | innen/inner |
| 12 | 19231 | | ✓ | | ✓ | | | ✓ | ✓ | ✓ | | Kit |
| 13 | 19232 | | ✓ | | | ✓ | | ✓ | ✓ | ✓ | | Kit |
| 14 | 19018 | 9947 923 | ✓ | | ✓ | ✓ | | | ✓ | ✓ | | |
| 15 | 19029 | 994 7919 | ✓ | | ✓ | | | | ✓ | ✓ | | |
| 16 | 19030 | 994 7920 | ✓ | | | ✓ | | | ✓ | ✓ | | |

## ALFA 164 -> 164TD 1987→ 12/91

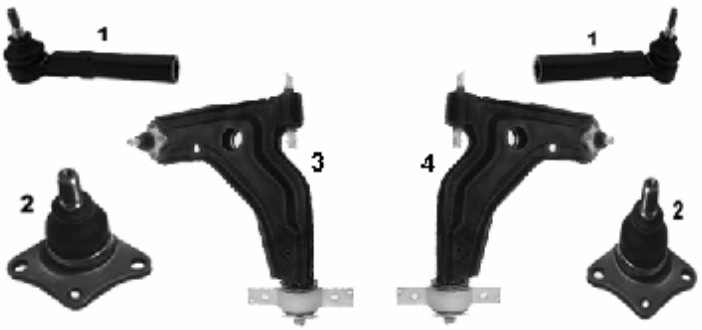


| NR | MAPCO | REF | | | ← | → | ↑ | ↓ | | | NEW | INFO |
|---|---|---|---|---|---|---|---|---|---|---|---|---|
| 1 | 19007 | 6051 1622 | ✓ | | ✓ | ✓ | | | ✓ | ✓ | | M14x1,5RHT |
| 2 | 19060 | 8244 6499 | ✓ | | ✓ | ✓ | | | ✓ | ✓ | | |
| 3 | 19061 | 6058 8843 | ✓ | | ✓ | | | | ✓ | ✓ | | Ø 13 mm |
| 4 | 19062 | 6058 8844 | ✓ | | | ✓ | | | ✓ | ✓ | | Ø 13 mm |

## ALFA 164 -> 164D

1992→ 09/98

| NR | MAPCO | REF | | | ← | → | ↑ | ↓ | | | NEW | INFO |
|---|---|---|---|---|---|---|---|---|---|---|---|---|
| 1 | 19007 | 6051 1622 | ✓ | | ✓ | ✓ | | | ✓ | ✓ | | M14x1,5RHT |
| 2 | 19008 | 6051 0360 | ✓ | | ✓ | ✓ | | | ✓ | ✓ | | |
| 3 | 19020 | 6080 1529<br>6051 0363 | ✓ | | ✓ | | | | ✓ | ✓ | | Ø 15 mm |
| 4 | 19021 | 6080 1528<br>6051 0362 | ✓ | | | ✓ | | | ✓ | ✓ | | Ø 15 mm |

## ALFA 166 STUFENHECK

09/98→

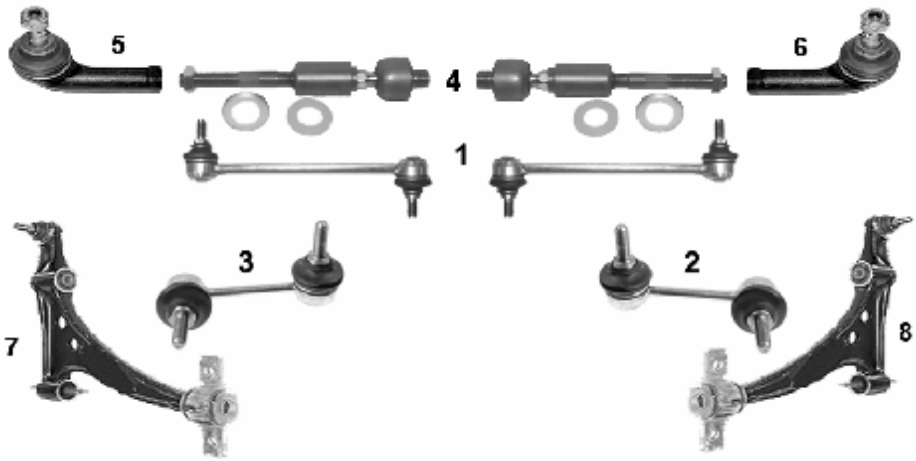


| NR | MAPCO | REF | | | ← | → | ↑ | ↓ | | | NEW | INFO |
|---|---|---|---|---|---|---|---|---|---|---|---|---|
| 1 | 49032 | 6063 0757 | ✓ | | ✓ | ✓ | | | ✓ | ✓ | | |
| 2 | 49033 | 6062 8255 | | ✓ | | ✓ | | | ✓ | ✓ | | |
| 3 | 49034 | 6062 8284 | | ✓ | ✓ | | | | ✓ | ✓ | | |
| 4 | 19018 | 9947 923 | ✓ | | ✓ | ✓ | | | ✓ | ✓ | | |
| 5 | 19029 | 9947 919 | ✓ | | ✓ | | | | ✓ | ✓ | | |
| 6 | 19030 | 9947 920 | ✓ | | | ✓ | | | ✓ | ✓ | | |
| 7 | 19031 | 6066 5804 | ✓ | | ✓ | | | | ✓ | ✓ | | |
| 8 | 19032 | 6066 5805 | ✓ | | | ✓ | | | ✓ | ✓ | | |

## ALFA GTV 05/98→

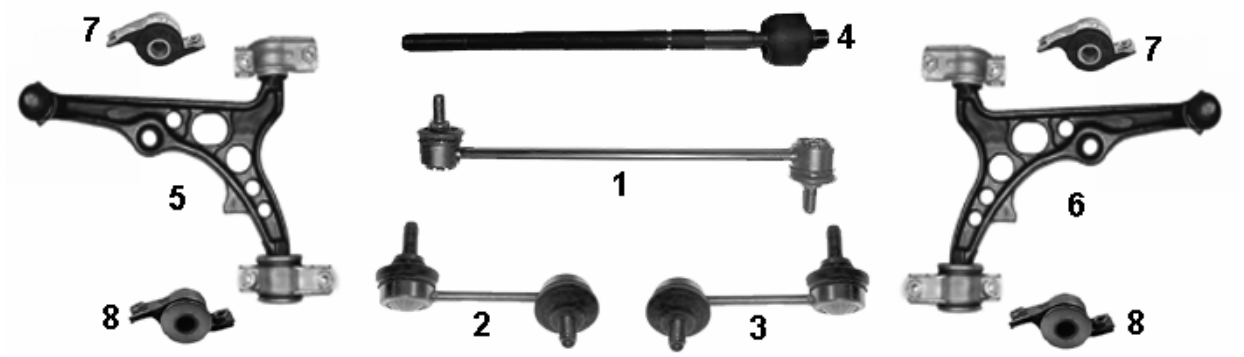


| NR | MAPCO | REF | | | ← | → | ↑ | ↓ | | | NEW | INFO |
|---|---|---|---|---|---|---|---|---|---|---|---|---|
| 1 | 49046 | 6061 4514 | ✓ | | ✓ | ✓ | | | ✓ | ✓ | | |
| 2 | 49047 | 6061 2435 | | ✓ | ✓ | | | | ✓ | ✓ | | |
| 3 | 49048 | 6061 2436 | | ✓ | | ✓ | | | ✓ | ✓ | | |
| 4 | 49053 | 9947 718 | ✓ | | ✓ | ✓ | | | ✓ | ✓ | | M14x1,5RHT |
| 5 | 19009 | 6081 3013 | ✓ | | ✓ | | | | ✓ | ✓ | | |
| 6 | 19010 | 6081 3014 | ✓ | | | ✓ | | | ✓ | ✓ | | |
| 7 | 33019 | 7601 065 | ✓ | | ✓ | ✓ | | | ✓ | ✓ | ✓ | |
| 8 | 33035 | 7601 068 | ✓ | | ✓ | ✓ | | | ✓ | ✓ | ✓ | |

## ALFA SPIDER 06/95→

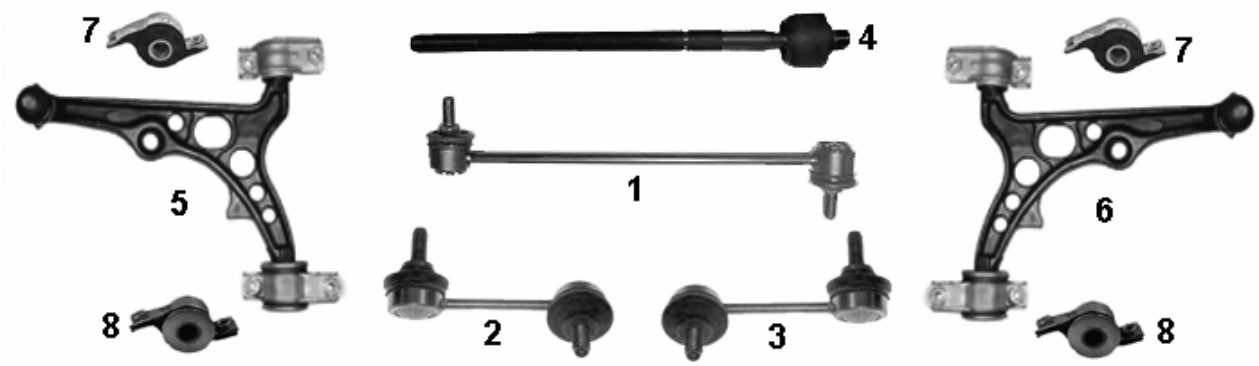


| NR | MAPCO | REF | | | ← | → | ↑ | ↓ | | | NEW | INFO |
|---|---|---|---|---|---|---|---|---|---|---|---|---|
| 1 | 49046 | 6061 4514 | ✓ | | ✓ | ✓ | | | ✓ | ✓ | | |
| 2 | 49047 | 6061 2435 | | ✓ | ✓ | | | | ✓ | ✓ | | |
| 3 | 49048 | 6061 2436 | | ✓ | | ✓ | | | ✓ | ✓ | | |
| 4 | 49053 | 9947 718 | ✓ | | ✓ | ✓ | | | ✓ | ✓ | | M14x1,5RHT |
| 5 | 19009 | 6081 3013 | ✓ | | ✓ | | | | ✓ | ✓ | | |
| 6 | 19010 | 6081 3014 | ✓ | | | ✓ | | | ✓ | ✓ | | |
| 7 | 33019 | 7601 065 | ✓ | | ✓ | ✓ | | | ✓ | ✓ | ✓ | |
| 8 | 33035 | 7601 068 | ✓ | | ✓ | ✓ | | | ✓ | ✓ | ✓ | |

# AUDI

## AUDI 50 — 08/74→ 07/78

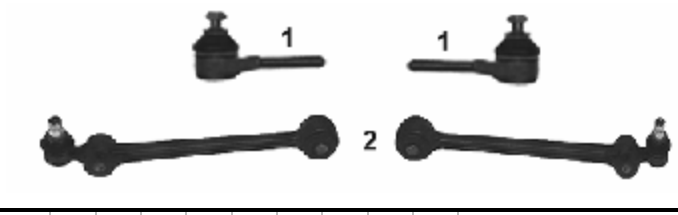


| NR | MAPCO | REF | | | ← | → | ↑ | ↓ | | | NEW | INFO |
|---|---|---|---|---|---|---|---|---|---|---|---|---|
| 1 | 19850 | 811419812 | ✓ | | ✓ | ✓ | | | ✓ | ✓ | | M14x1,5RHT |
| 2 | 19854 | 861407151B | ✓ | | ✓ | ✓ | | | ✓ | ✓ | | |

## AUDI 80 — 04/80→ 08/86
## AUDI 80 QUATTRO — 04/82→ 08/86
## AUDI 90 + QUATTRO — 06/84→ 01/87

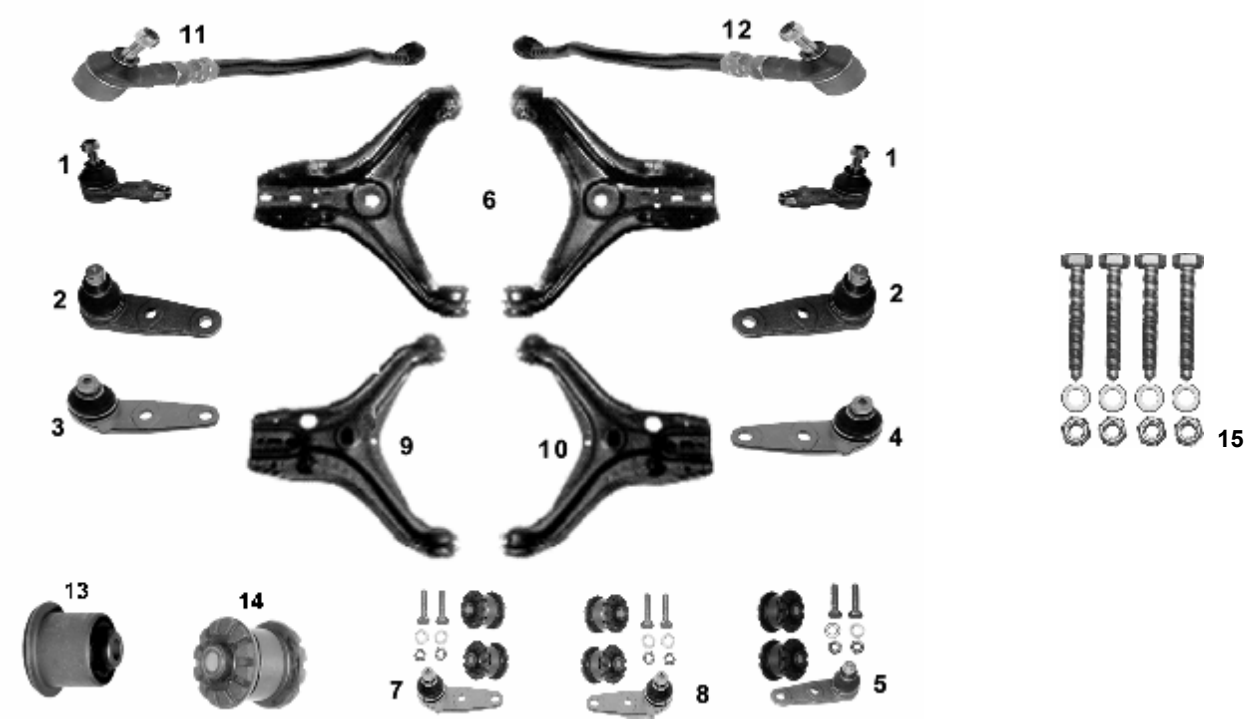


| NR | MAPCO | REF | | | ← | → | ↑ | ↓ | | | NEW | INFO |
|---|---|---|---|---|---|---|---|---|---|---|---|---|
| 1 | 19890 | 811419812A | ✓ | | ✓ | ✓ | | | ✓ | ✓ | | M14x1,5RHT |
| 2 | 19857 | 823407365E | ✓ | | ✓ | ✓ | | | ✓ | ✓ | | Chassis → 81-D077973 / QUATTRO Ø 17 mm |
| 3 | 19893 | 855407365A+B | ✓ | | ✓ | | | | ✓ | ✓ | | Chassis 81-D077974→ Ø 17 mm |
| 4 | 19894 | 855407366A+B | ✓ | | | ✓ | | | ✓ | ✓ | | Chassis 81-D077974→ Ø 17 mm |
| 5 | 19257 | | ✓ | | ✓ | ✓ | | | | ✓ | | Kit → 8/86 |
| 6 | 49768 | 893407147G | ✓ | | ✓ | ✓ | | | | ✓ | | |
| 7 | 19293 | | ✓ | | ✓ | | | | | ✓ | | Kit 09/86→ 03/87 |
| 8 | 19294 | | ✓ | | | ✓ | | | | ✓ | | Kit 09/86→ 03/87 |
| 9 | 49769 | 893407147C+D | ✓ | | ✓ | | | | ✓ | | | |
| 10 | 49770 | 893407148C+D | ✓ | | | ✓ | | | ✓ | | | |
| 11 | 49761 | 811419801E | ✓ | | ✓ | | | | ✓ | ✓ | | |
| 12 | 49762 | 811419802J | ✓ | | | ✓ | | | ✓ | ✓ | | |
| 13 | 33813 | 857 407 181 | ✓ | | ✓ | ✓ | | | ✓ | | | |
| 14 | 33828 | 811 407 181 | ✓ | | ✓ | ✓ | | | | ✓ | | |
| 15 | 95705 | | ✓ | | ✓ | ✓ | | | ✓ | ✓ | | MS |

## AUDI 80 + QUATTRO
## AUDI 90 + QUATTRO

09/86→ 07/89
09/86→ 07/89

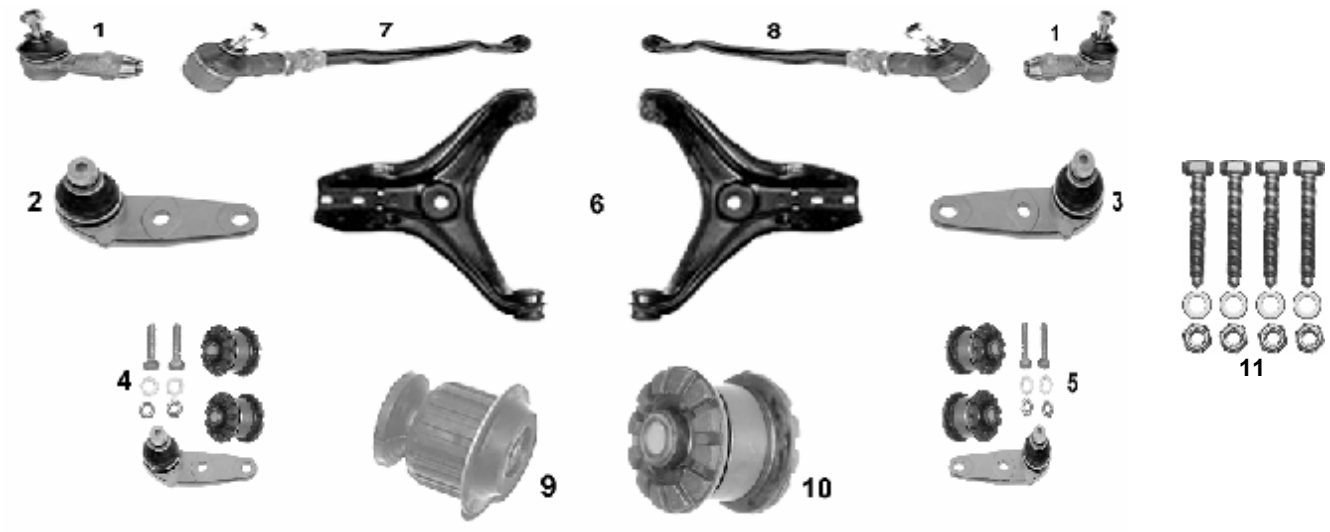


| NR | MAPCO | REF | | | ← | → | ↑ | ↓ | | | NEW | INFO |
|---|---|---|---|---|---|---|---|---|---|---|---|---|
| 1 | 19890 | 811419812A | ✓ | | ✓ | ✓ | | | | ✓ | | M14x1,5RHT |
| 2 | 19893 | 855407365A+B | ✓ | | ✓ | | | | | ✓ | | Chassis 81-D077974→ Ø 17 mm |
| 3 | 19894 | 855407366A+B | ✓ | | | ✓ | | | | ✓ | | Chassis 81-D077974→ Ø 17 mm |
| 4 | 19293 | | ✓ | | ✓ | | | | | ✓ | | Kit |
| 5 | 19294 | | ✓ | | | ✓ | | | | ✓ | | Kit |
| 6 | 49768 | 893407147G | ✓ | | ✓ | ✓ | | | | ✓ | | |
| 7 | 49761 | 811419801E | ✓ | | ✓ | | | | | ✓ | | |
| 8 | 49763 | 893419802 | ✓ | | | ✓ | | | | ✓ | | |
| 9 | 33830 | 893199415 | ✓ | | ✓ | ✓ | | | | ✓ | | |
| 10 | 33828 | 811407181<br>811407181A | ✓ | | ✓ | ✓ | | | | ✓ | | |
| 11 | 95705 | | ✓ | | ✓ | ✓ | | | | ✓ | | MS |

## AUDI 80 + QUATTRO 09/86→ 07/89
## AUDI 90 + QUATTRO 09/86→ 07/89

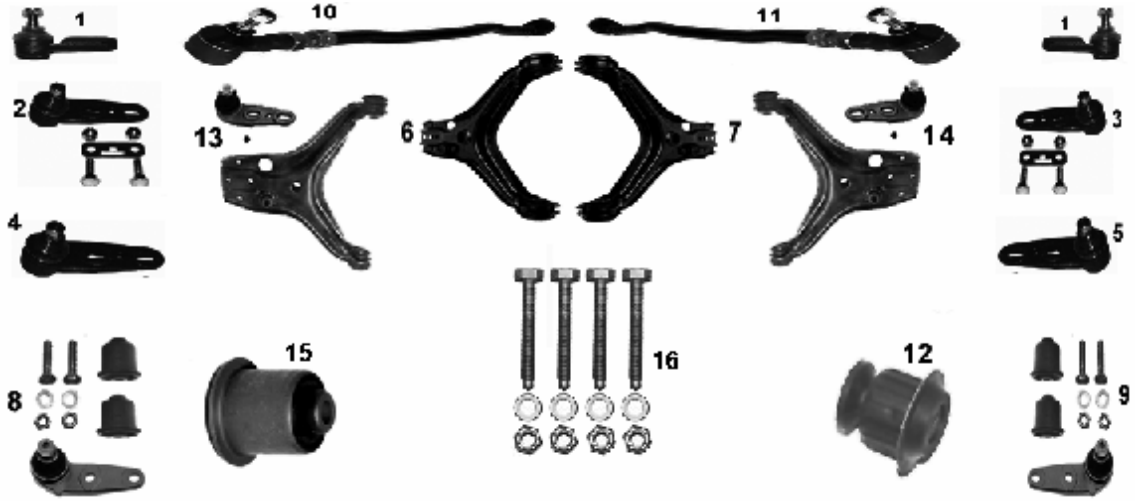


| NR | MAPCO | REF | | | ← | → | ↑ | ↓ | | | NEW | INFO |
|---|---|---|---|---|---|---|---|---|---|---|---|---|
| 1 | **19890** | 811419812A | ✓ | | ✓ | ✓ | | | ✓ | | | M14x1,5RHT |
| 2 | **19893** | 855407365A+B | ✓ | | ✓ | | | | ✓ | | | Chassis → 89-J-373598 Ø 17 mm |
| 3 | **19894** | 855407366A+B | ✓ | | | ✓ | | | ✓ | | | Chassis → 89-J-373598 Ø 17 mm |
| 4 | **19680** | 893407365F | ✓ | | ✓ | | | | ✓ | | | Chassis 89-J-373599→ Ø 19 mm |
| 5 | **19681** | 893407366F | ✓ | | | ✓ | | | ✓ | | | Chassis 89-J-373599→ Ø 19 mm |
| 6 | **49769** | 893407147C | ✓ | | ✓ | | | | ✓ | | | |
| 7 | **49770** | 893407148C | ✓ | | | ✓ | | | ✓ | | | |
| 8 | **19280** | | ✓ | | ✓ | | | | ✓ | | | Kit |
| 9 | **19281** | | ✓ | | | ✓ | | | ✓ | | | Kit |
| 10 | **49761** | 811419801E | ✓ | | ✓ | | | | ✓ | | | |
| 11 | **49763** | 893419802 | ✓ | | | ✓ | | | ✓ | | | |
| 12 | **33830** | 893199415 | ✓ | | ✓ | ✓ | | | ✓ | | | |
| 13 | **49769/1** | | ✓ | | ✓ | | | | ✓ | | | **10 + 4** |
| 14 | **49770/1** | | ✓ | | | ✓ | | | ✓ | | | **11 + 5** |
| 15 | **33813** | 857407181 | ✓ | | ✓ | ✓ | | | ✓ | | | |
| 16 | **95705** | | ✓ | | ✓ | ✓ | | | ✓ | | | MS |

# AUDI 80 + QUATTRO
# AUDI 90 + QUATTRO

**07/89→09/91**

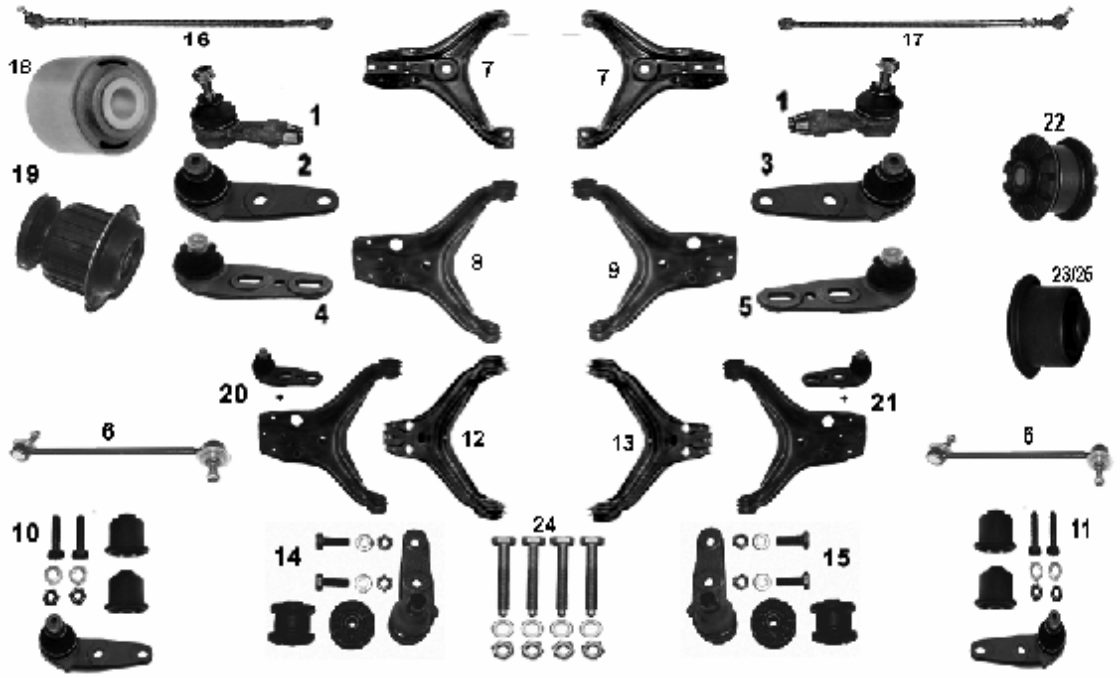


| NR | MAPCO | REF | | | ← | → | ↑ | ↓ | | | NEW | INFO |
|---|---|---|---|---|---|---|---|---|---|---|---|---|
| 1 | **19890** | 811419812A | ✓ | | ✓ | ✓ | | | ✓ | ✓ | | M14x1,5RHT |
| 2 | **19898** | 893407365A | ✓ | | ✓ | | | | | ✓ | | Ø 19 mm |
| 3 | **19897** | 893407366A | ✓ | | | ✓ | | | | ✓ | | Ø 19 mm |
| 4 | **19680** | 893407365F | ✓ | | ✓ | | | | ✓ | | | Ø 19 mm |
| 5 | **19681** | 893407366F | ✓ | | | ✓ | | | ✓ | | | Ø 19 mm |
| 6 | **19603HPS** | 893407465 | ✓ | | ✓ | ✓ | | | ✓ | ✓ | | Chassis 8A-L-045001→ |
| 7 | **49768** | 893407147G | ✓ | | ✓ | ✓ | | | | ✓ | | |
| 8 | **49769** | 893407147C+D | ✓ | | ✓ | | | | ✓ | | | Chassis → 8A-L-038656 |
| 9 | **49770** | 893407148C+D | ✓ | | | ✓ | | | ✓ | | | Chassis → 8A-L-038656 |
| 10 | **19280** | | ✓ | | ✓ | | | | ✓ | | | Kit |
| 11 | **19281** | | ✓ | | | ✓ | | | ✓ | | | Kit |
| 12 | **49775** | 893407147E | ✓ | | ✓ | | | | ✓ | | | Chassis 8A-L-038657→ |
| 13 | **49776** | 893407148E | ✓ | | | ✓ | | | ✓ | | | Chassis 8A-L-038657→ |
| 14 | **19297** | | ✓ | | ✓ | | | | | ✓ | | Kit |
| 15 | **19298** | | ✓ | | | ✓ | | | | ✓ | | Kit |
| 16 | **49761** | 811419801E | ✓ | | ✓ | | | | ✓ | ✓ | | |
| 17 | **49763** | 893419802 | ✓ | | | ✓ | | | ✓ | ✓ | | |
| 18 | **33829** | 811511247 | ✓ | | ✓ | ✓ | | | ✓ | ✓ | | |
| 19 | **33830** | 893199415 | ✓ | | ✓ | ✓ | | | ✓ | ✓ | | |
| 20 | **49769/1** | | ✓ | | ✓ | | | | ✓ | ✓ | | **8+4** |
| 21 | **49770/1** | | ✓ | | | ✓ | | | ✓ | ✓ | | **9+5** |
| 22 | **33828** | 81407181<br>811407181A | ✓ | | ✓ | ✓ | | | | ✓ | | |
| 23 | **33813** | 857407181 | ✓ | | ✓ | ✓ | | | ✓ | | | 2.8 |
| 24 | **95705** | | ✓ | | ✓ | ✓ | | | ✓ | ✓ | | MS |
| 25 | **33846** | 893407181 | ✓ | | ✓ | ✓ | | | ✓ | | | ✓ 2.8 |

## AUDI 80 + AVANT + 80 QUATTRO + Cabrio B4 09/91→12/94

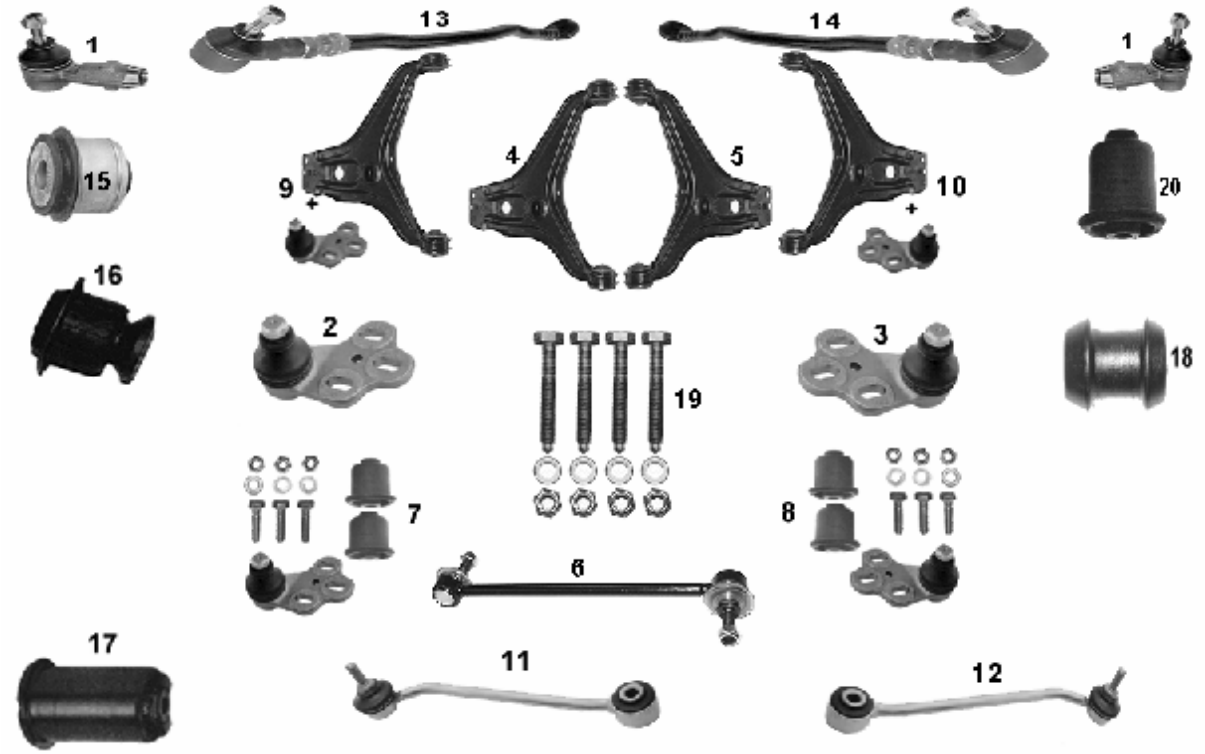


| NR | MAPCO | REF | | | ← | → | ↑ | ↓ | | | NEW | INFO |
|---|---|---|---|---|---|---|---|---|---|---|---|---|
| 1 | 19890 | 811419812A | ✓ | | ✓ | ✓ | | | ✓ | ✓ | | M14x1,5RHT |
| 2 | 19684 | 8A0407365 | ✓ | | ✓ | | | | ✓ | ✓ | | Ø 19 mm |
| 3 | 19685 | 8A0407366 | ✓ | | | ✓ | | | ✓ | ✓ | | Ø 19 mm |
| 4 | 49705 | 895407147A | ✓ | | ✓ | | | | ✓ | ✓ | | |
| 5 | 49706 | 895407148A | ✓ | | | ✓ | | | ✓ | ✓ | | |
| 6 | 19603HPS | 8A0406465C | ✓ | | ✓ | ✓ | | | ✓ | ✓ | | |
| 7 | 19284 | | ✓ | | ✓ | ✓ | | | ✓ | ✓ | | Kit |
| 8 | 19285 | | ✓ | | ✓ | ✓ | | | ✓ | ✓ | | Kit |
| 9 | 49705/1 | | ✓ | | ✓ | | | | ✓ | ✓ | | **4+2** |
| 10 | 49706/1 | | ✓ | | | ✓ | | | ✓ | ✓ | | **5+3** |
| 11 | 49688 | 8D0505465 | | ✓ | ✓ | | | | ✓ | ✓ | | |
| 12 | 49689 | 8D0505466 | | ✓ | | ✓ | | | ✓ | ✓ | | |
| 13 | 49761 | 811419801E | ✓ | | ✓ | | | | ✓ | ✓ | | |
| 14 | 49763 | 893419802 | ✓ | | | ✓ | | | ✓ | ✓ | | |
| 15 | 33827 | 893199419 | ✓ | | ✓ | ✓ | | | ✓ | ✓ | | |
| 16 | 33830 | 893199415 | ✓ | | ✓ | ✓ | | | ✓ | ✓ | | |
| 17 | 33894 | 8A0501541 | | ✓ | ✓ | ✓ | | | ✓ | ✓ | | |
| 18 | 33907 | 857407474 | ✓ | | ✓ | ✓ | | | ✓ | ✓ | | |
| 19 | 95705 | | ✓ | | ✓ | ✓ | | | ✓ | ✓ | | MS |
| 20 | 33842 | 857407181 | ✓ | | ✓ | ✓ | | | ✓ | | | |

## AUDI 100

09/85→ 01/91

| NR | MAPCO | REF | | | ← | → | ↑ | ↓ | | | NEW | INFO |
|---|---|---|---|---|---|---|---|---|---|---|---|---|
| 1 | 49696 | 437407151A | ✓ | | ✓ | | | | ✓ | | | |
| 2 | 49697 | 437407152A | ✓ | | | ✓ | | | ✓ | | | |
| 10 | 49696/1 | 437407151A | ✓ | | ✓ | | | | ✓ | | | 1 + 33891 (2x) |
| 11 | 49697/1 | 437407152A | ✓ | | | ✓ | | | ✓ | | | 2 + 33891 (2x) |
| 3 | 49698 | 437407151B<br>443407151B | ✓ | | ✓ | | | | | ✓ | | |
| 4 | 49699 | 437407151B<br>443407152B | ✓ | | | ✓ | | | | ✓ | | |
| 5 | 49717 | 443419811D | ✓ | | ✓ | ✓ | | | ✓ | ✓ | | M16x1,5 RHT |
| 6 | 49718 | 443 419812B<br>443 419812D | ✓ | | ✓ | ✓ | | | ✓ | ✓ | | M16x1,5 RHT |
| 7 | 33891 | 431407181F | ✓ | | ✓ | ✓ | | | ✓ | ✓ | | |
| 8 | 33898 | 431511247C | ✓ | | ✓ | ✓ | | | ✓ | ✓ | | |
| 9 | 95696 | | ✓ | | ✓ | ✓ | | | ✓ | ✓ | | MS |

## AUDI 100 + AVANT + QUATTRO 09/91→06/94

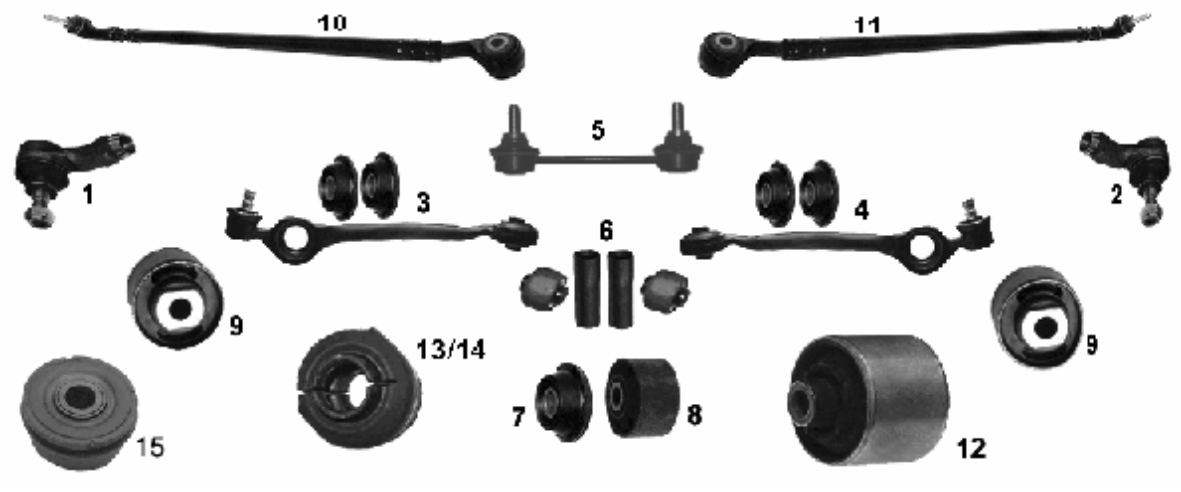


| NR | MAPCO | REF | | | ← | → | ↑ | ↓ | | | NEW | INFO |
|---|---|---|---|---|---|---|---|---|---|---|---|---|
| 1 | 19692 | 4A0419811A | ✓ | | ✓ | | | | ✓ | ✓ | | M18x1,5RHT |
| 2 | 19693 | 4A0419812A | ✓ | | | ✓ | | | ✓ | ✓ | | M18x1,5RHT |
| 3 | 19694 | 4A0407151 | ✓ | | ✓ | | | | ✓ | ✓ | | |
| 4 | 19695 | 4A0407152 | ✓ | | | ✓ | | | ✓ | ✓ | | |
| 5 | 49686 | 4A0505389 | | ✓ | ✓ | ✓ | | | ✓ | ✓ | | |
| 6 | 33878/2 | | ✓ | | ✓ | ✓ | | | ✓ | ✓ | | Kit |
| 7 | 33892 | 4A0407181A | ✓ | | ✓ | ✓ | | | ✓ | ✓ | | |
| 8 | 33898 | 431511247C | ✓ | | ✓ | ✓ | | | ✓ | ✓ | | |
| 9 | 33899 | 4A0511247 | | ✓ | ✓ | ✓ | | | ✓ | ✓ | | |
| 10 | 49789 | 4A0419801A | ✓ | | ✓ | | | | ✓ | ✓ | | |
| 11 | 49790 | 4A0419802A | ✓ | | | ✓ | | | ✓ | ✓ | | |
| 12 | 33941 | 4D0511523A | | ✓ | ✓ | ✓ | | ✓ | ✓ | ✓ | | |
| 13 | 33938 | 4A0411327F | ✓ | | ✓ | ✓ | | | ✓ | ✓ | | 24,0 mm ✓ 2.0 |
| 14 | 36904 | 4A0411327A | ✓ | | ✓ | ✓ | | | ✓ | ✓ | | 25,0 mm |
| 15 | 36941 | 4A0511247B | | ✓ | ✓ | ✓ | | ✓ | ✓ | ✓ | ✓ | |

## AUDI A2 02/00→08/05

| NR | MAPCO | REF | | | ← | → | ↑ | ↓ | | | NEW | INFO |
|---|---|---|---|---|---|---|---|---|---|---|---|---|
| 1 | 59892 | 8Z0 423 803C | ✓ | | ✓ | | | | ✓ | ✓ | | |
| 2 | 59891 | 8Z0 423 804C | ✓ | | | ✓ | | | ✓ | ✓ | | |
| 3 | 59894 | 8Z0 411 315B | ✓ | | ✓ | ✓ | | | ✓ | ✓ | | 1.2 TDI |
| 4 | 59812HPS | 6Q0 411 315A | ✓ | | ✓ | ✓ | | | ✓ | ✓ | | 1.4, 1.4TDI, 1.6 FSI |
| 5 | 36798 | 8Z0 407 183 | ✓ | | ✓ | ✓ | | | ✓ | ✓ | ✓ | 1.4 |

## AUDI A3 (8L1) 10/97→

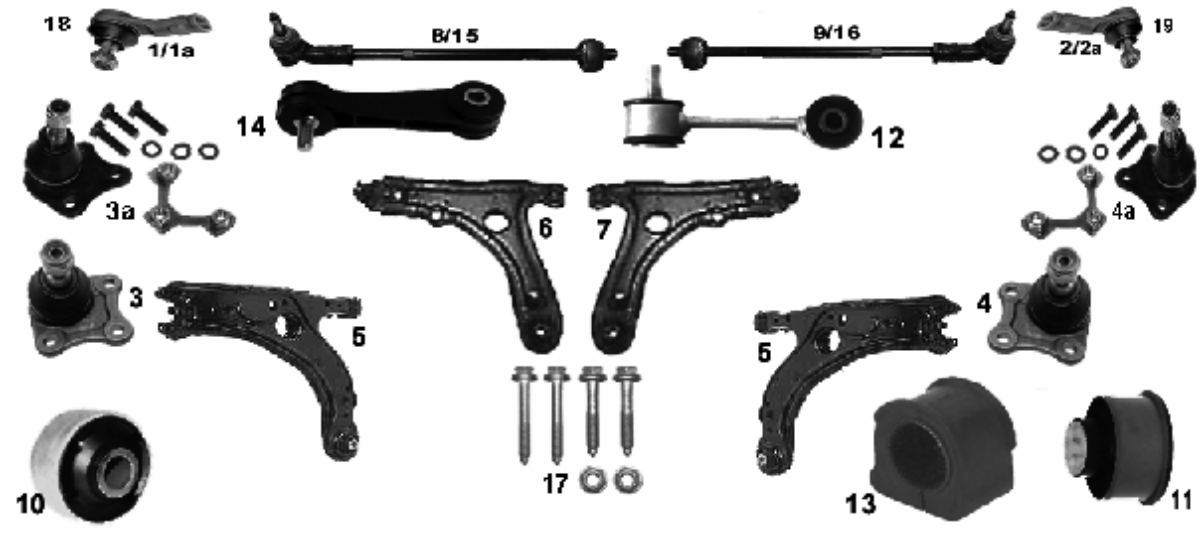


| NR | MAPCO | REF | | | ← | → | ↑ | ↓ | | | NEW | INFO |
|---|---|---|---|---|---|---|---|---|---|---|---|---|
| 1 | 49700 | 1J0 422 811B | ✓ | | ✓ | | | | ✓ | ✓ | | L=94mm M14x1,5RHT, Chassis 8L-W-050422 → |
| 1a | 59895 | 1J0 422 811A | ✓ | | ✓ | | | | ✓ | ✓ | | L=75mm M14x1,5RHT, Chassis → 8L-W-050421 |
| 2 | 49701 | 1J0 422 812B | ✓ | | | ✓ | | | ✓ | ✓ | | L=94mm M14x1,5RHT, Chassis 8L-W-050422 → |
| 2a | 59896 | 1J0 422 812A | ✓ | | | ✓ | | | ✓ | ✓ | | L=75mm M14x1,5RHT, Chassis → 8L-W-050421 |
| 3 | 49702 | 1J0 407 365C | ✓ | | ✓ | | | | ✓ | ✓ | | |
| 3a | 49702/1 | 1J0 407 365A | ✓ | | ✓ | | | | ✓ | ✓ | | |
| 4 | 49703 | 1J0 407 366C | ✓ | | | ✓ | | | ✓ | ✓ | | |
| 4a | 49703/1 | 1J0 407 366A | ✓ | | | ✓ | | | ✓ | ✓ | | |
| 5 | 49704 | 1J0 407 151B | ✓ | | ✓ | ✓ | | | ✓ | ✓ | | |
| 6 | 49704/1 | | ✓ | | ✓ | | | | ✓ | ✓ | | **5+3a** Chassis 8L-W-050422→ |
| 7 | 49704/2 | | ✓ | | | ✓ | | | ✓ | ✓ | | **5+4a** Chassis 8L-W-050422→ |
| 8 | 49690 | 1J0 422 803B | ✓ | | ✓ | | | | ✓ | ✓ | | Chassis 8L-W-050422→ |
| 9 | 49691 | 1J0 422 804B | ✓ | | | ✓ | | | ✓ | ✓ | | Chassis 8L-W-050422→ |
| 10 | 33903 | 1J0 407 181 | ✓ | | ✓ | ✓ | | | ✓ | ✓ | | |
| 11 | 33912 | 1J0 501 541C | | ✓ | ✓ | ✓ | | | ✓ | ✓ | | |
| 12 | 49867 | 1J0 411 315C | ✓ | | ✓ | ✓ | | | ✓ | ✓ | | Stahl/steel L=105mm, Ø 23mm |
| 13 | 33927 | 1J0 411 314B | ✓ | | ✓ | ✓ | | | ✓ | ✓ | | Innen Ø 19mm |
| 14 | 49868 | 1J0 411 315C | ✓ | | ✓ | ✓ | | | ✓ | ✓ | | Plastik L= 105mm Ø 21mm |
| 15 | 49869 | 1J0 422 803A | ✓ | | ✓ | | | | ✓ | ✓ | | Chassis → 8L-W-050421 |
| 16 | 49870 | 1J0 422 804A | ✓ | | | ✓ | | | ✓ | ✓ | | Chassis → 8L-W-050421 |
| 17 | 95704 | | ✓ | | ✓ | ✓ | | | ✓ | ✓ | | MS |
| 18 | 51711 | 8N0 422 811A | ✓ | | ✓ | | | | ✓ | | | 16x1,5RHT ✓ S3 quattro |
| 19 | 51712 | 8N0 422 812A | ✓ | | | ✓ | | | ✓ | | | 16x1,5RHT ✓ S3 quattro |
| | | | | | | | | | | | | |
| | | | | | | | | | | | | |
| | | | | | | | | | | | | |

## AUDI A3 (8P1) 05/03→
## AUDI A3 (8PA) 09/04→

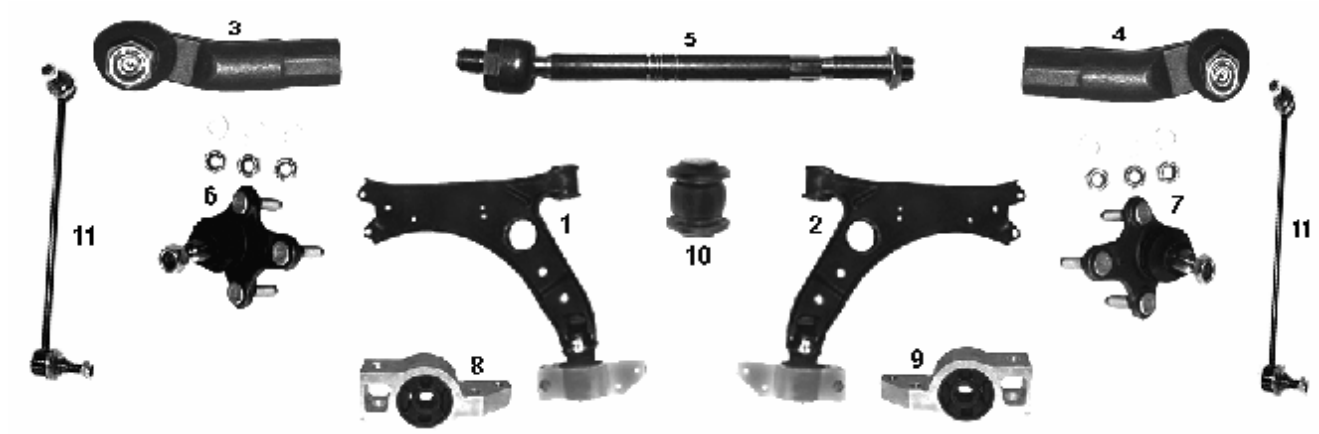


| NR | MAPCO | REF | | | ← | → | ↑ | ↓ | | | NEW | INFO |
|---|---|---|---|---|---|---|---|---|---|---|---|---|
| 1 | 51715 | 1K0 407 151P | ✓ | | ✓ | | | ✓ | ✓ | ✓ | | |
| 2 | 51716 | 1K0 407 152P | ✓ | | | ✓ | | ✓ | ✓ | ✓ | | |
| 3 | 51826 | 1K0 423 811A | ✓ | | ✓ | | | | ✓ | ✓ | | |
| 4 | 51827 | 1K0 423 812A | ✓ | | | ✓ | | | ✓ | ✓ | | |
| 5 | 51723 | 1K0 423 810A | ✓ | | ✓ | ✓ | | | ✓ | ✓ | | M16x1,5RHT L=310 mm |
| 6 | 51724 | 1K0 407 365E | ✓ | | ✓ | | | ✓ | ✓ | ✓ | | Konus 16,00 mm |
| 7 | 51725 | 1K0 407 366E | ✓ | | | ✓ | | ✓ | ✓ | ✓ | | Konus 16,00 mm |
| 8 | 36948 | 1K0 199 231G | ✓ | | ✓ | | | ✓ | ✓ | ✓ | ✓ | |
| 9 | 36949 | 1K0 199 232G | ✓ | | | ✓ | | ✓ | ✓ | ✓ | ✓ | |
| 10 | 36950 | 1K0 407 182 | ✓ | | ✓ | ✓ | | ✓ | ✓ | ✓ | ✓ | |
| 11 | 51825HPS | 1K0 411 315D | ✓ | | ✓ | ✓ | | ✓ | ✓ | ✓ | ✓ | |

## AUDI A4 + AVANT + QUATTRO 11/94→

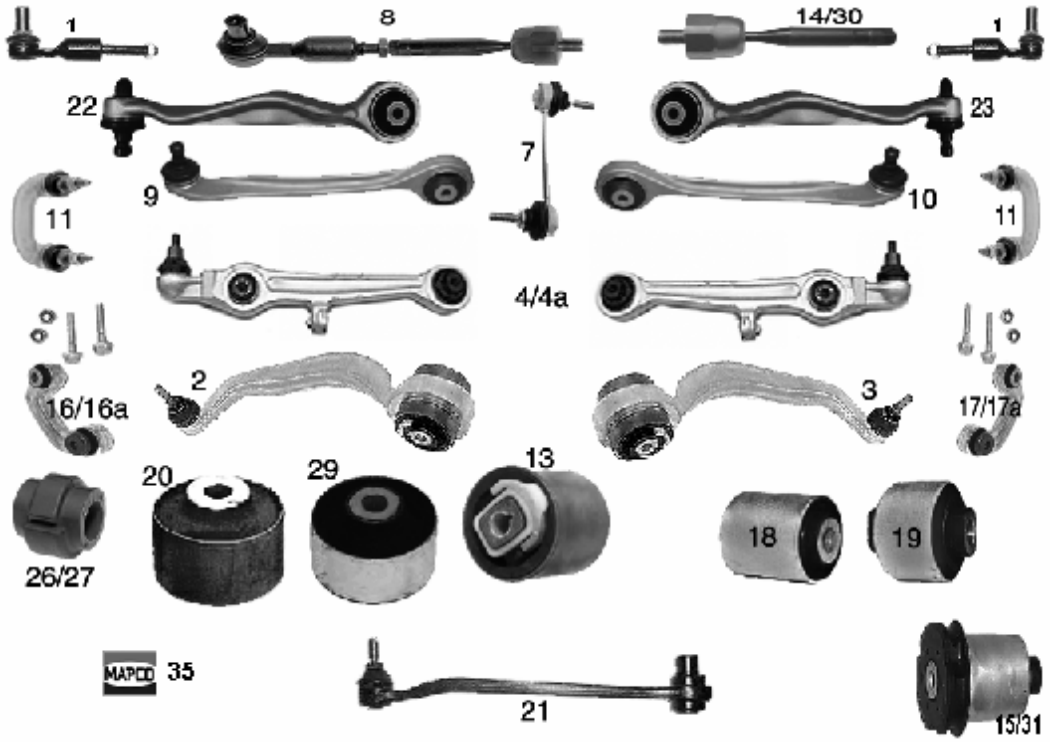


| NR | MAPCO | REF | | | ← | → | ↑ | ↓ | | | NEW | INFO |
|---|---|---|---|---|---|---|---|---|---|---|---|---|
| 1 | 49707 | 4D0419811B | ✓ | | ✓ | ✓ | | | ✓ | ✓ | | |
| 2 | 49708 | 4D0407693N | ✓ | | ✓ | | | ✓ | ✓ | ✓ | | hinten/ rear/ arrière |
| 3 | 49709 | 4D0407694N | ✓ | | | ✓ | | ✓ | ✓ | ✓ | | hinten/ rear/ arrière |
| 4 | 49710 | 4D0407151P | ✓ | | ✓ | ✓ | | | ✓ | ✓ | | vorn/ front/ avant -> 10/04 |
| 4a | 51710 | 8E0407151N | ✓ | | ✓ | ✓ | | | ✓ | ✓ | | vorn/ front/ avant 11/04 -> |
| 7 | 49714 | 4D0505465D | ✓ | | ✓ | ✓ | | | ✓ | ✓ | | |
| 8 | 49732 | 4D0419801B | ✓ | | ✓ | ✓ | | | ✓ | ✓ | | |
| 9 | 49680 | 8D0407505F | ✓ | | ✓ | | ✓ | | ✓ | ✓ | | vorn/ front/ avant |
| 10 | 49681 | 8D0407506F | ✓ | | | ✓ | ✓ | | ✓ | ✓ | | vorn/ front/ avant |
| 11 | 49682 | 4D0411317J | ✓ | | ✓ | ✓ | | | ✓ | ✓ | | |
| 13 | 33932 | 4D0407183N | ✓ | | ✓ | ✓ | | ✓ | ✓ | ✓ | | |
| 14 | 49738 | 4D0422821A | ✓ | | ✓ | ✓ | | | ✓ | ✓ | | → 11/00 |
| 15 | 33902 | 8D0501541D | | ✓ | ✓ | ✓ | | | ✓ | ✓ | | |
| 16 | 49683 | 8D0411317D | ✓ | | ✓ | ✓ | | ✓ | ✓ | ✓ | | |
| 16a | 49683/1 | 8D0411317D | ✓ | | ✓ | ✓ | | ✓ | ✓ | ✓ | | + Chassis 8D-W-290001→ |
| 17 | 49684 | 8D0411318D | ✓ | | ✓ | ✓ | | ✓ | ✓ | ✓ | | |
| 17a | 49684/1 | 8D0411318D | ✓ | | ✓ | ✓ | | ✓ | ✓ | ✓ | | + Chassis 8D-W-290001→ |
| 18 | 33839 | 4D0407181H | ✓ | | ✓ | ✓ | | | ✓ | ✓ | | ⦸ 40mm |
| 19 | 33840 | 4D0407182E | ✓ | | ✓ | ✓ | | | ✓ | ✓ | | ⦸ 50mm |
| 20 | 33876 | 4D0407515D | ✓ | | ✓ | ✓ | | | ✓ | ✓ | | |
| 21 | 59893 | 8D0 501 530 | | ✓ | | | | | ✓ | ✓ | | 01/95→ |
| 22 | 49791 | 4D0407509G | ✓ | | ✓ | | | | ✓ | ✓ | | hinten/ rear/ arrière |
| 23 | 49792 | 4D0407510G | ✓ | | | ✓ | | | ✓ | ✓ | | hinten/ rear/ arrière |
| 26 | 33939 | 4D0 411 327E | ✓ | | ✓ | ✓ | | | ✓ | ✓ | | |
| 27 | 33940 | 4D0 411 327F | ✓ | | ✓ | ✓ | | | ✓ | ✓ | | ✓ |
| 28 | 95710 | | ✓ | | ✓ | ✓ | | | ✓ | ✓ | | MS |

## AUDI A4 + AVANT + QUATTRO

Fortsetzung / continued (S.19) 11/94→

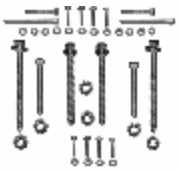

28

24

24a

32

24b

33

25

26

34

27

| NR | MAPCO | REF | | | ← | → | ↑ | ↓ | | | NEW | INFO |
|---|---|---|---|---|---|---|---|---|---|---|---|---|
| 24 | 59818 | 4D0498998C | ✓ | | ✓ | ✓ | | | ✓ | ✓ | | |
| 24a | 59818/1HPS | 4D0498998C | ✓ | | ✓ | ✓ | | | ✓ | ✓ | | → 10/04 + MS |
| 24b | 59818/2 | 4D0498998C | ✓ | | ✓ | ✓ | | | ✓ | ✓ | | → 10/04 + MS |
| 25 | 59819 | 8D0 498 998 | ✓ | | ✓ | ✓ | | | ✓ | ✓ | | |
| 26 | 59819/1 | 8D0 498 998 | ✓ | | ✓ | ✓ | | | ✓ | ✓ | | → 10/04 + MS |
| 27 | 59819/2 | 8D0 498 998 | ✓ | | ✓ | ✓ | | | ✓ | ✓ | | |
| 29 | 36915 | 4B0 407 515 | ✓ | | ✓ | ✓ | ✓ | | ✓ | ✓ | | vorn/ front/ avant |
| 30 | 51707 | 8E0422801B | ✓ | | ✓ | ✓ | | | ✓ | ✓ | ✓ | 11/04→ M14x1,5 |
| 31 | 33988 | 8D0501541A | | ✓ | ✓ | ✓ | | | ✓ | ✓ | ✓ | ✓ |
| 32 | 59824/1 | | ✓ | | ✓ | ✓ | | | ✓ | ✓ | | 11/04→ + MS |
| 33 | 59824/2 | | ✓ | | ✓ | ✓ | | | ✓ | ✓ | | 11/04→ + MS |
| 34 | 59825/1 | | ✓ | | ✓ | ✓ | | | ✓ | ✓ | | 11/04→ + MS |
| 35 | 36778 | 4F0407183C | ✓ | | ✓ | ✓ | | ✓ | ✓ | ✓ | ✓ | bushing hinten/ rear/ arrière 11/04 -> |

## AUDI A6 + AVANT + QUATTRO 08/94→ 12/97

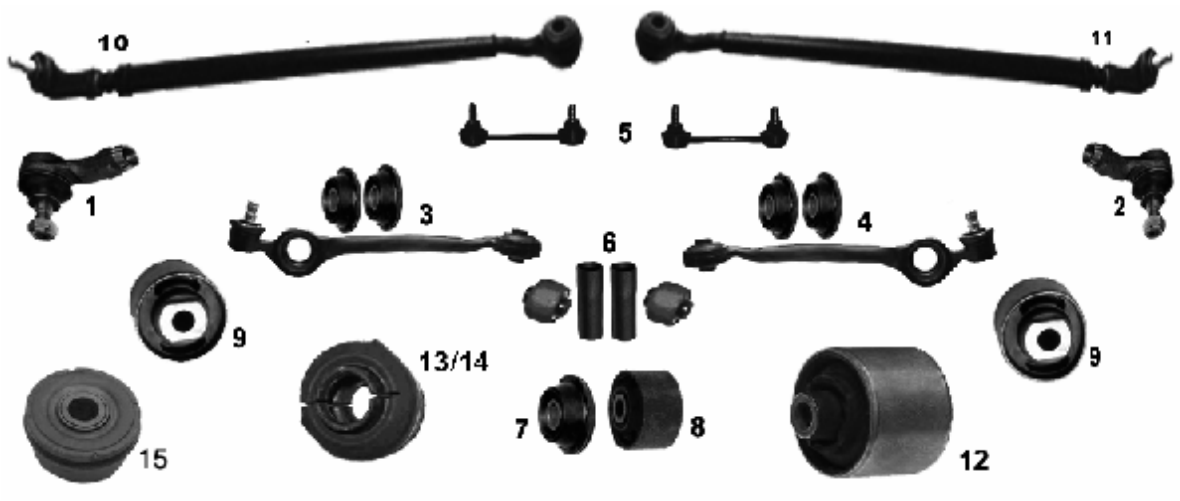


| NR | MAPCO | REF | | | ← | → | ↑ | ↓ | | | NEW | INFO |
|---|---|---|---|---|---|---|---|---|---|---|---|---|
| 1 | 49717 | 443419811D | ✓ | | ✓ | | | | ✓ | ✓ | | M16x1,5RHT |
| 2 | 49718 | 443419812D | ✓ | | | ✓ | | | ✓ | ✓ | | M16x1,5RHT |
| 3 | 19694 | 4A0407151 | ✓ | | ✓ | | | | ✓ | ✓ | | |
| 4 | 19695 | 4A0407152 | ✓ | | | ✓ | | | ✓ | ✓ | | |
| 5 | 49686 | 4A0505389 | | ✓ | ✓ | ✓ | | | ✓ | ✓ | | |
| 6 | 33878/2 | | ✓ | | ✓ | ✓ | | | ✓ | ✓ | | Kit |
| 7 | 33892 | 4A0407181A | ✓ | | ✓ | ✓ | | | ✓ | ✓ | | |
| 8 | 33898 | 431511247C | ✓ | | ✓ | ✓ | | | ✓ | ✓ | | |
| 9 | 33899 | 4A0511247 | | ✓ | ✓ | ✓ | | | ✓ | ✓ | | |
| 10 | 49789 | 4A0419801A | ✓ | | ✓ | | | | ✓ | ✓ | | |
| 11 | 49790 | 4A0419802A | ✓ | | | ✓ | | | ✓ | ✓ | | |
| 12 | 33941 | 4D0511523A | | ✓ | ✓ | ✓ | | ✓ | ✓ | ✓ | | |
| 13 | 33938 | 4A0411327F | ✓ | | ✓ | ✓ | | | ✓ | ✓ | | 24,0 mm ✓ 2.0 |
| 14 | 36904 | 4A0411327A | ✓ | | ✓ | ✓ | | | ✓ | ✓ | | 25,0 mm |
| 15 | 36941 | 4A0511247B | | ✓ | ✓ | ✓ | | ✓ | ✓ | ✓ | ✓ | |

## AUDI A6 + AVANT + QUATTRO 01/97→

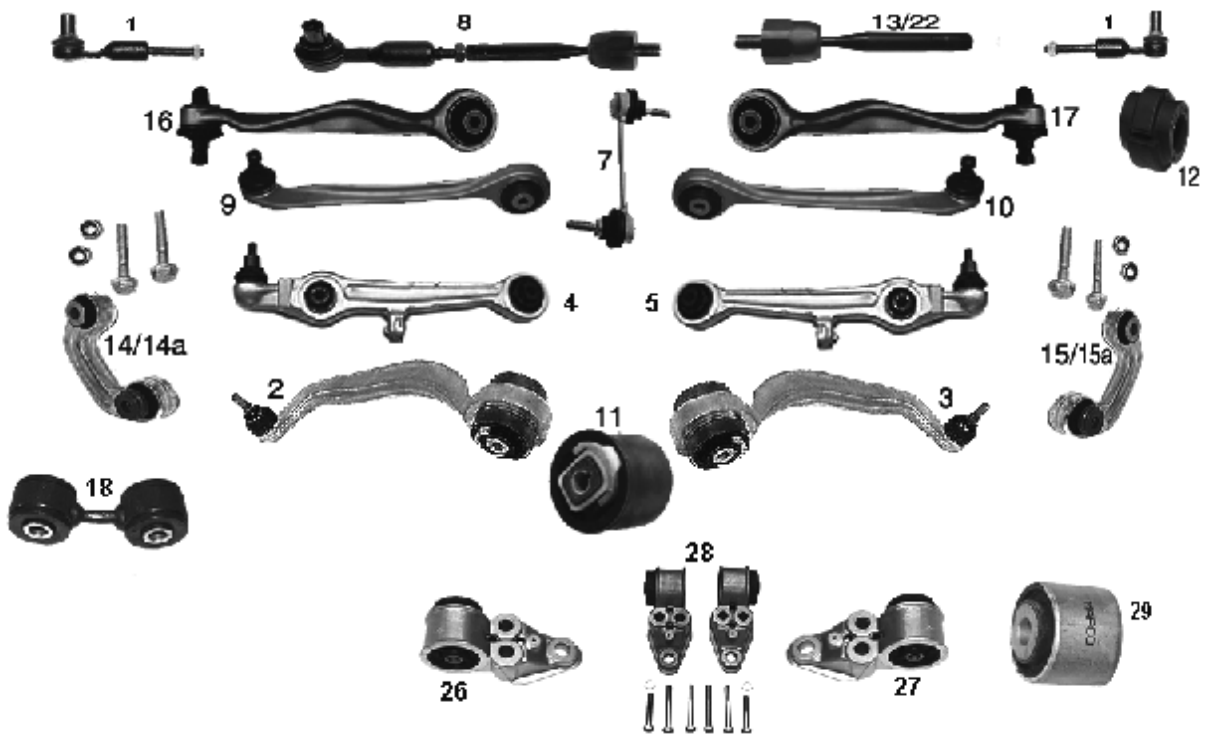


| NR | MAPCO | REF | | | ← | → | ↑ | ↓ | | | NEW | INFO |
|---|---|---|---|---|---|---|---|---|---|---|---|---|
| 1 | 49707 | 4D0419811B | ✓ | | ✓ | ✓ | | | ✓ | ✓ | | |
| 2 | 49708 | 4D0407693N | ✓ | | ✓ | | | ✓ | ✓ | ✓ | | hinten/ rear/ arrière |
| 3 | 49709 | 4D0407694N | ✓ | | | ✓ | | ✓ | ✓ | ✓ | | hinten/ rear/ arrière |
| 4 | 49710 | 4D0407151P | ✓ | | ✓ | ✓ | | | ✓ | ✓ | | vorn/ front/ avant -> 12/01 |
| 5 | 51710 | 8E0407151N | ✓ | | ✓ | ✓ | | | ✓ | ✓ | | ✓ quattro 1998-> 12/01 vorn/ front/ avant 01/02 -> |
| 7 | 49714 | 4D0505465D | ✓ | | ✓ | ✓ | | | ✓ | ✓ | | |
| 8 | 49732 | 4D0419801B | ✓ | | ✓ | ✓ | | | ✓ | ✓ | | |
| 9 | 49680 | 8D0407505F | ✓ | | ✓ | | ✓ | | ✓ | ✓ | | vorn/ front/ avant |
| 10 | 49681 | 8D0407506F | ✓ | | | ✓ | ✓ | | ✓ | ✓ | | vorn/ front/ avant |
| 11 | 33932 | 4D0407183N | ✓ | | ✓ | ✓ | | ✓ | ✓ | ✓ | | |
| 12 | 33940 | 4D0 411 327F | ✓ | | ✓ | ✓ | | | ✓ | ✓ | | |
| 13 | 49738 | 4D0422821A | ✓ | | ✓ | ✓ | | | ✓ | ✓ | | |
| 14 | 49683 | 8D0411317D | ✓ | | ✓ | ✓ | | ✓ | ✓ | ✓ | | |
| 14a | 49683/1 | 8D0411317D | ✓ | | ✓ | ✓ | | ✓ | ✓ | ✓ | | + Chassis 8D-W-290001→ |
| 15 | 49684 | 8D0411318D | ✓ | | ✓ | ✓ | | ✓ | ✓ | ✓ | | |
| 15a | 49684/1 | 8D0411318D | ✓ | | ✓ | ✓ | | ✓ | ✓ | ✓ | | + Chassis 8D-W-290001→ |
| 16 | 49791 | 4D0407509G | ✓ | | ✓ | | | | ✓ | ✓ | | hinten/ rear/ arrière |
| 17 | 49792 | 4D0407510G | ✓ | | | ✓ | | | ✓ | ✓ | | hinten/ rear/ arrière |
| 18 | 59820 | 8E0505465C | | ✓ | ✓ | ✓ | | | ✓ | ✓ | | ✓ quattro |
| 21 | 95710 | | ✓ | | ✓ | ✓ | | | ✓ | ✓ | | MS |
| 22 | 51707 | 8E0422801B | ✓ | | ✓ | ✓ | | | ✓ | ✓ | ✓ | 11/00→ M14x1,5 |

**Fortsetzung / continued Seite/ page 23**

## AUDI A6 + AVANT + QUATTRO

Fortsetzung / continued (S.22) 01/97→

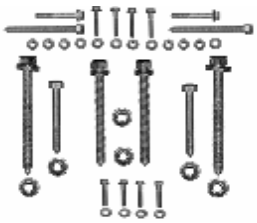

21

19

19a

23

19b

24

20

21

25

22

| NR | MAPCO | REF | | | ← | → | ↑ | ↓ | | | NEW | INFO |
|---|---|---|---|---|---|---|---|---|---|---|---|---|
| 19 | 59818 | 4D0498998C | ✓ | | ✓ | ✓ | | | ✓ | ✓ | | |
| 19a | 59818/1HPS | 4D0498998C | ✓ | | ✓ | ✓ | | | ✓ | ✓ | | -> 12/01 + MS |
| 19b | 59818/2 | 4D0498998C | ✓ | | ✓ | ✓ | | | ✓ | ✓ | | -> 12/01 + MS |
| 20 | 59819 | 8D0 498 998 | ✓ | | ✓ | ✓ | | | ✓ | ✓ | | |
| 21 | 59819/1 | 8D0 498 998 | ✓ | | ✓ | ✓ | | | ✓ | ✓ | | -> 12/01 + MS |
| 22 | 59819/2 | 8D0 498 998 | ✓ | | ✓ | ✓ | | | ✓ | ✓ | | |
| 23 | 59824/1 | | ✓ | | ✓ | ✓ | | | ✓ | ✓ | | ✓ quattro 1998-> 12/01, 01/02 -> + MS |
| 24 | 59824/2 | | ✓ | | ✓ | ✓ | | | ✓ | ✓ | | ✓ quattro 1998-> 12/01, 01/02 -> + MS |
| 25 | 59825/1 | | ✓ | | ✓ | ✓ | | | ✓ | ✓ | | ✓ quattro 1998-> 12/01, 01/02 -> + MS |
| 26 | 36775 | 4B0501521D | | ✓ | ✓ | | | | ✓ | ✓ | ✓ | |
| 27 | 36776 | 4B0501522D | | ✓ | | ✓ | | | ✓ | ✓ | ✓ | |
| 28 | 36782 | | | | | | | | | | | |
| 29 | 36777 | 4F0407183A | ✓ | | ✓ | ✓ | | ✓ | ✓ | ✓ | ✓ | hinten/ rear/ arrière 05/04 -> |

## AUDI A8 + A8 QUATTRO 08/94→

| NR | MAPCO | REF | | | ← | → | ↑ | ↓ | | | NEW | INFO |
|---|---|---|---|---|---|---|---|---|---|---|---|---|
| 1 | 49707 | 4D0419811B | ✓ | | ✓ | ✓ | | | ✓ | ✓ | | |
| 2 | 49708 | 4D0407693N | ✓ | | ✓ | | | ✓ | ✓ | ✓ | | hinten/ rear/ arrière |
| 3 | 49709 | 4D0407694N | ✓ | | | ✓ | | ✓ | ✓ | ✓ | | hinten/ rear/ arrière |
| 4 | 49710 | 4D0407151P | ✓ | | ✓ | ✓ | | | ✓ | ✓ | | vorn/ front/ avant -> 12/98 |
| 4a | 51710 | 8E0407151N | ✓ | | ✓ | ✓ | | | ✓ | ✓ | | vorn/ front/ avant 01/99 -> 2003 |
| 7 | 49713 | 4D0407505D | ✓ | | ✓ | | | | ✓ | ✓ | | |
| 8 | 49714 | 4D0505465D | ✓ | | | ✓ | | | ✓ | ✓ | | |
| 9 | 49715 | 4D0505548C | | ✓ | | ✓ | | | ✓ | ✓ | | |
| 10 | 49716 | 4D0501529E | | ✓ | ✓ | ✓ | | | ✓ | ✓ | | |
| 11 | 49729 | 4D0505547C | | ✓ | ✓ | | | | ✓ | ✓ | | |
| 12 | 49732 | 4D0419801B | ✓ | | ✓ | ✓ | | | ✓ | ✓ | | |
| 13 | 49738 | 4D0422821A | ✓ | | ✓ | ✓ | | | ✓ | ✓ | | |
| 14 | 33932 | 4D0407183N | ✓ | | ✓ | ✓ | | ✓ | ✓ | ✓ | | |
| 15 | 33939 | 4D0 411 327E | ✓ | | ✓ | ✓ | | | ✓ | ✓ | | |
| 15a | 33940 | 4D0 411 327F | ✓ | | ✓ | ✓ | | | ✓ | ✓ | | ✓ |
| 16 | 49685 | 4D0411317K | ✓ | | ✓ | ✓ | | ✓ | ✓ | ✓ | | |
| 17 | 49791 | 4D0407509G | ✓ | | ✓ | | | | ✓ | ✓ | | hinten/ rear/ arrière |
| 18 | 49792 | 4D0407510G | ✓ | | | ✓ | | | ✓ | ✓ | | hinten/ rear/ arrière |
| 21 | 95713 | | ✓ | | ✓ | ✓ | | | ✓ | ✓ | | MS |

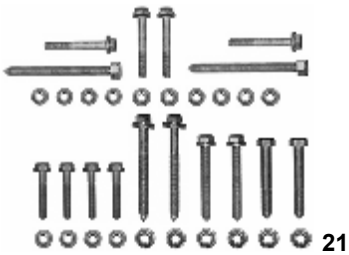


**Fortsetzung / continued**
**Seite/page 25**

## AUDI A8 + A8 QUATTRO

Fortsetzung / continued (S.24) 08/94→

19

19a

20

20a

| NR | MAPCO | REF | | | ← | → | ↑ | ↓ | | | NEW | INFO |
|---|---|---|---|---|---|---|---|---|---|---|---|---|
| 19 | 59821 | | ✓ | | ✓ | ✓ | | | ✓ | ✓ | | Chassis →144999 |
| 19a | 59821/1 | | ✓ | | ✓ | ✓ | | | ✓ | ✓ | | Chassis →144999 + MS |
| 20 | 59822 | | ✓ | | ✓ | ✓ | | | ✓ | ✓ | | Chassis 145000→ |
| 20a | 59822/1 | | ✓ | | ✓ | ✓ | | | ✓ | ✓ | | Chassis 145000→ + MS |

## AUDI TT
## AUDI TT Roadster

10/98→
10/99→

| NR | MAPCO | REF | | | ← | → | ↑ | ↓ | | | NEW | INFO |
|---|---|---|---|---|---|---|---|---|---|---|---|---|
| 1 | 49793 | 1J0411315D | ✓ | | ✓ | | | | ✓ | ✓ | | |
| 2 | 49794 | 1J0411316D | ✓ | | | ✓ | | | ✓ | ✓ | | |
| 3 | 51711 | 8N0422811A | ✓ | | ✓ | | | | ✓ | ✓ | ✓ | 16x1,5RHT |
| 4 | 51712 | 8N0422812A | ✓ | | | ✓ | | | ✓ | ✓ | ✓ | 16x1,5RHT |
| 5 | 51713 | 8N0422803A | ✓ | | ✓ | | | | ✓ | ✓ | ✓ | |
| 6 | 51714 | 8N0422804A | ✓ | | | ✓ | | | ✓ | ✓ | ✓ | |

# BMW

## BMW 1er E87 09/04→

| NR | MAPCO | REF | | | ← | → | ↑ | ↓ | | | NEW | INFO |
|---|---|---|---|---|---|---|---|---|---|---|---|---|
| 1 | 51634 | 31126763699 | ✓ | | ✓ | | | ✓ | ✓ | ✓ | ✓ | Konus 16,0 mm |
| 2 | 51635 | 31126763700 | ✓ | | | ✓ | | ✓ | ✓ | ✓ | ✓ | Konus 16,0 mm |

## BMW 3er E30 316 -> 325i 10/82→08/90

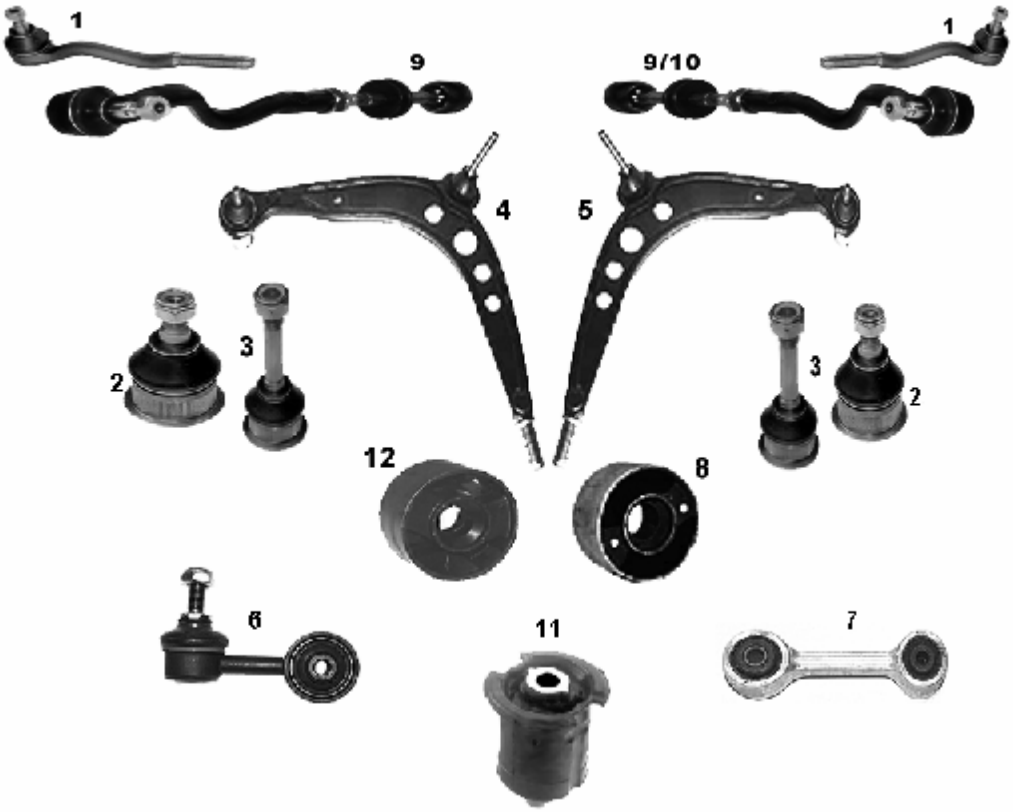


| NR | MAPCO | REF | | | ← | → | ↑ | ↓ | | | NEW | INFO |
|---|---|---|---|---|---|---|---|---|---|---|---|---|
| 1 | 19660 | 32111126757 | ✓ | | ✓ | ✓ | | | ✓ | ✓ | | M14x1,5RHT |
| 2 | 19661 | 31121126254 | ✓ | | ✓ | ✓ | | ✓ | ✓ | ✓ | | |
| 3 | 19662 | 31121126253 | ✓ | | ✓ | ✓ | | ✓ | ✓ | ✓ | | |
| 4 | 49733 | 31121127725 | ✓ | | ✓ | | | | ✓ | ✓ | | |
| 5 | 49734 | 31121127726 | ✓ | | | ✓ | | | ✓ | ✓ | | |
| 6 | 19667 | 31351091764 | ✓ | | ✓ | ✓ | | | ✓ | ✓ | | |
| 7 | 49786 | 33551126932 | | ✓ | ✓ | ✓ | | | ✓ | ✓ | | |
| 8 | 33875 | 31129058815 | ✓ | | ✓ | ✓ | | | ✓ | ✓ | | |
| 9 | 49780 | 32111125186 | ✓ | | ✓ | ✓ | | | ✓ | ✓ | | STOP |
| 10 | 49781 | 32111125187 | ✓ | | | ✓ | | | ✓ | ✓ | | ✓ |
| 11 | 33689 | 33311129144 | | ✓ | ✓ | ✓ | | | ✓ | ✓ | | **15x58x104 mm** |
| 12 | 33875/1 | 31121130123 | ✓ | | ✓ | ✓ | | | ✓ | ✓ | | |

## BMW Z1 1988→1991

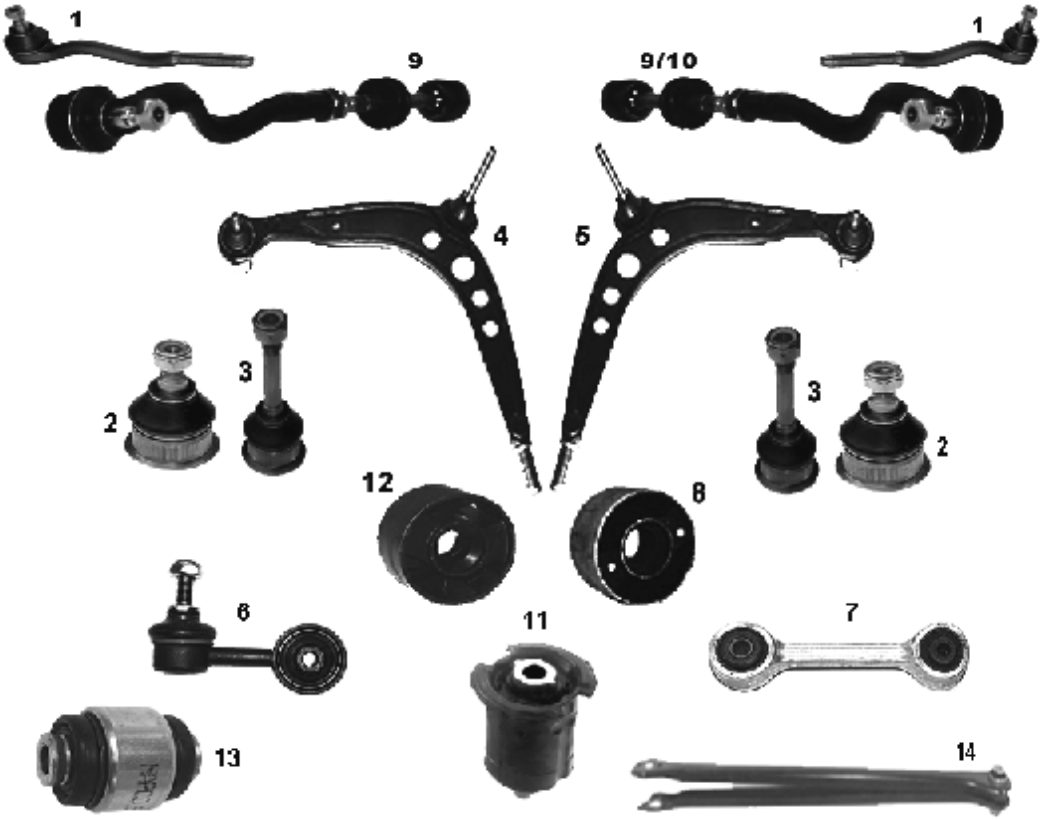


| NR | MAPCO | REF | | | ← | → | ↑ | ↓ | | | NEW | INFO |
|---|---|---|---|---|---|---|---|---|---|---|---|---|
| 1 | 19660 | 32111126757 | ✓ | | ✓ | ✓ | | | ✓ | ✓ | | M14x1,5RHT |
| 2 | 19661 | 31121126254 | ✓ | | ✓ | ✓ | | ✓ | ✓ | ✓ | | |
| 3 | 19662 | 31121126253 | ✓ | | ✓ | ✓ | | ✓ | ✓ | ✓ | | |
| 4 | 49733 | 31121127725 | ✓ | | ✓ | | | | ✓ | ✓ | | |
| 5 | 49734 | 31121127726 | ✓ | | | ✓ | | | ✓ | ✓ | | |
| 6 | 19667 | 31351091764 | ✓ | | ✓ | ✓ | | | ✓ | ✓ | | |
| 7 | 49786 | 33551126932 | | ✓ | ✓ | ✓ | | | ✓ | ✓ | | |
| 8 | 33875 | 31129058815 | ✓ | | ✓ | ✓ | | | ✓ | ✓ | | |
| 9 | 49780 | 32111125186 | ✓ | | ✓ | ✓ | | | ✓ | ✓ | | STOP |
| 10 | 49781 | 32111125187 | ✓ | | | ✓ | | | ✓ | ✓ | | ✓ |
| 11 | 33689 | 33311129144 | | ✓ | ✓ | ✓ | | | ✓ | ✓ | | **15x58x104 mm** |
| 12 | 33875/1 | 31121130123<br>31121130140<br>31129058931 | ✓ | | ✓ | ✓ | | | ✓ | ✓ | | |
| 13 | 59621 | 33321138722 | | ✓ | ✓ | ✓ | | | ✓ | ✓ | | **aussen/outside** |
| 14 | 59638 | 33321092237 | | ✓ | ✓ | ✓ | | ✓ | ✓ | ✓ | ✓ | ✓ **2,5** |

## BMW 3er E36 316i -> 325 Coupé , M3 09/90→ 1999

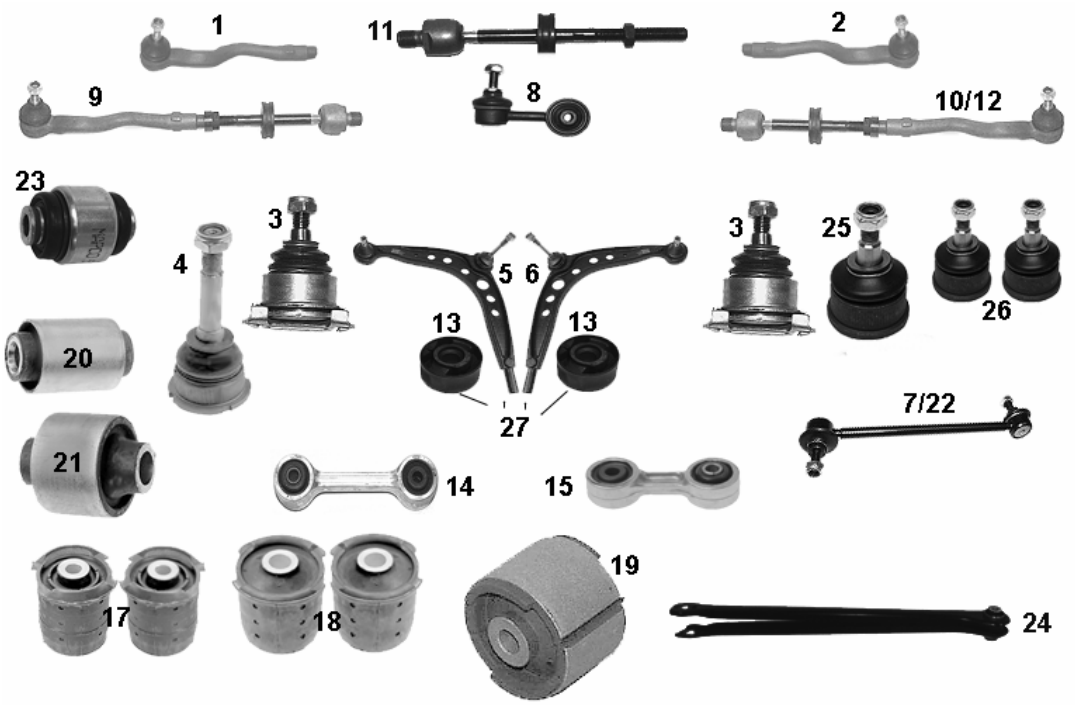


| NR | MAPCO | REF | | | ← | → | ↑ | ↓ | | | NEW | INFO |
|---|---|---|---|---|---|---|---|---|---|---|---|---|
| 1 | 19663 | 32111139313 | ✓ | | ✓ | | | | ✓ | ✓ | | M14x1,5RHT |
| 2 | 19664 | 32111139314 | ✓ | | | ✓ | | | ✓ | ✓ | | M14x1,5RHT |
| 3 | 19666HPS | 31121140398 | ✓ | | ✓ | ✓ | | | ✓ | ✓ | ✓ | M12x1,5 / 36,5 mm |
| 4 | 19665 | 31121139131 | ✓ | | ✓ | ✓ | | | ✓ | ✓ | | M14x1,5 / 89,7 mm |
| 5 | 19670 | 31121140957 | ✓ | | ✓ | | | | ✓ | ✓ | | |
| 6 | 19671 | 31121140958 | ✓ | | | ✓ | | | ✓ | ✓ | | |
| 7 | 19678HPS | 31351134582 | ✓ | | ✓ | ✓ | | | ✓ | | | 10/91→ |
| 8 | 19667 | 31351091764 | ✓ | | ✓ | ✓ | | | ✓ | ✓ | | |
| 9 | 49782 | 32111139315 | ✓ | | ✓ | | | | ✓ | ✓ | | 367 mm |
| 10 | 49783 | 32111139316 | ✓ | | | ✓ | | | ✓ | ✓ | | 367 mm ✓ STOP 316i M40 |
| 11 | 49785/1 | 32111136133 | ✓ | | ✓ | ✓ | | | ✓ | ✓ | ✓ | M14x1,5 |
| 12 | 49785 | 32111139318 | ✓ | | | ✓ | | | ✓ | ✓ | | 367 mm ✓ ✓ 316i M40 |
| 13 | 33847 | 31129059288 | ✓ | | ✓ | ✓ | | | ✓ | ✓ | | |
| 14 | 49786 | 33551126932 | | ✓ | ✓ | ✓ | | | ✓ | ✓ | | STOP COMPACT |
| 15 | 49787 | 33551135307 | | ✓ | ✓ | ✓ | | | ✓ | ✓ | | ✓ COMPACT |
| 17 | 33692 | 33319059300 | | ✓ | ✓ | ✓ | | | ✓ | ✓ | | **12,5x60,5x77 mm** |
| 17 | 33692/2 | Kit : 2 x 33692 | | ✓ | ✓ | ✓ | | | ✓ | ✓ | | **axle kit** |
| 18 | 33693 | 33319059301 | | ✓ | ✓ | ✓ | | | ✓ | ✓ | | **15,5x62,5x66,5 mm** |
| 18 | 33693/2 | Kit : 2 x 33693 | | ✓ | ✓ | ✓ | | | ✓ | ✓ | | **axle kit** |
| 19 | 33934 | 33321097009 | | ✓ | ✓ | ✓ | | | ✓ | ✓ | | für **Längslenker** Aluminium |
| 20 | 36661 | 33321092248 | | ✓ | ✓ | ✓ | | | ✓ | ✓ | | **Innen/inner Stahl/steel 52,0x40,0x12,0 mm** |
| 21 | 36662 | 33321136311 | | ✓ | ✓ | ✓ | | | ✓ | ✓ | | **aussen/outside Stahl/steel 52,0x45,5x12,0 mm** |
| 22 | 59613 | 31352227203 | | ✓ | ✓ | ✓ | | | ✓ | ✓ | | 231 mm ✓ **M3 3.0+3.2** |
| 23 | 59621 | 33321138722 | | ✓ | ✓ | ✓ | | | ✓ | ✓ | | **aussen/outside** |
| 24 | 59638 | 33321092237 | | ✓ | ✓ | ✓ | | ✓ | ✓ | ✓ | | |
| 25 | 19666/1 | 31121096685 | ✓ | | ✓ | ✓ | | | ✓ | ✓ | | **aussen/outside Stahl/steel** |
| 26 | 19666/2 | **Kit : 2 x 19666/1** | ✓ | | ✓ | ✓ | | | ✓ | ✓ | | **aussen/outside Stahl/steel** |
| 27 | 53670 | | ✓ | | ✓ | ✓ | | | ✓ | ✓ | ✓ | **axle kit** |

## BMW Z3 1995→

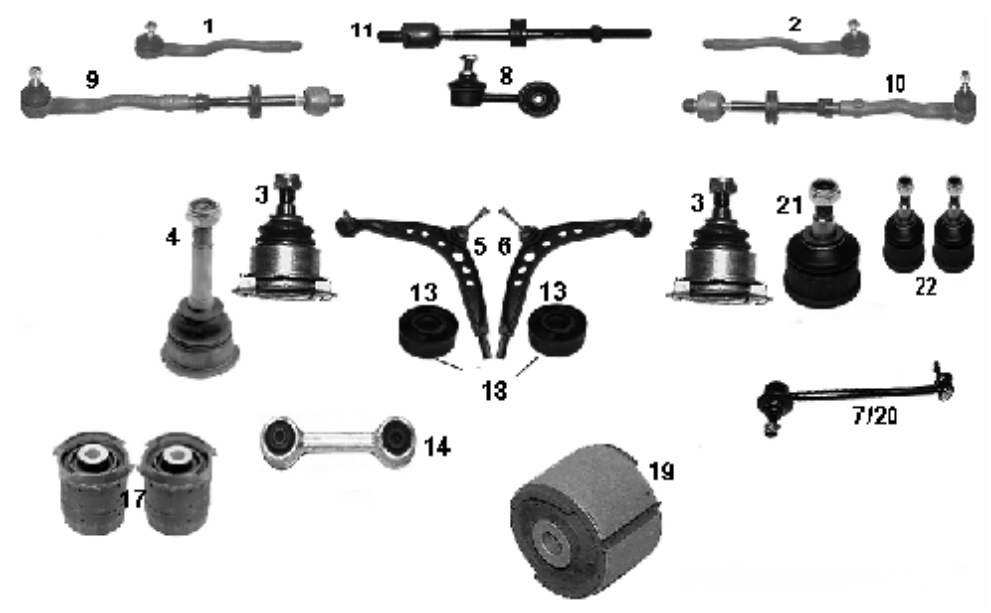


| NR | MAPCO | REF | | | ← | → | ↑ | ↓ | | | NEW | INFO |
|---|---|---|---|---|---|---|---|---|---|---|---|---|
| 1 | 19663 | 32111139313<br>32111140489 | ✓ | | ✓ | | | | ✓ | ✓ | | M14x1,5RHT |
| 2 | 19664 | 32111139314<br>32111140490 | ✓ | | | ✓ | | | ✓ | ✓ | | M14x1,5RHT |
| 3 | 19666HPS | 31121140398 | ✓ | | ✓ | ✓ | | | ✓ | ✓ | | M12x1,5 / 36,5 mm |
| 4 | 19665 | 31121139131 | ✓ | | ✓ | ✓ | | | ✓ | ✓ | | M14x1,5 / 89,7 mm |
| 5 | 19670 | 31121140957<br>31121140399 | ✓ | | ✓ | | | | ✓ | ✓ | | |
| 6 | 19671 | 31121140958<br>31121140400 | ✓ | | | ✓ | | | ✓ | ✓ | | |
| 7 | 19678HPS | 31351134582 | ✓ | | ✓ | ✓ | | | ✓ | | | 10/91→ |
| 8 | 19667 | 31351091764<br>31351127689 | ✓ | | ✓ | ✓ | | | ✓ | ✓ | | |
| 9 | 49782 | 32111139315 | ✓ | | ✓ | | | | ✓ | ✓ | | 367 mm |
| 10 | 49783 | 32111139316 | ✓ | | | ✓ | | | ✓ | ✓ | | 367 mm ✓ STOP 316i M40 |
| 11 | 49785/1 | 32111136133 | ✓ | | ✓ | ✓ | | | ✓ | ✓ | ✓ | M14x1,5 |
| 13 | 33847 | 31129059288 | ✓ | | ✓ | ✓ | | | ✓ | ✓ | | |
| 14 | 49786 | 33551126932 | | ✓ | ✓ | ✓ | | | ✓ | ✓ | | |
| 17 | 33692 | 33319059300 | | ✓ | ✓ | ✓ | | | ✓ | ✓ | | **12,5x60,5x77 mm** |
| 17 | 33692/2 | Kit : 2 x 33692 | | ✓ | ✓ | ✓ | | | ✓ | ✓ | | **axle kit** |
| 18 | 53670 | | ✓ | | ✓ | ✓ | | | ✓ | ✓ | ✓ | **axle kit** |
| 19 | 33934 | 33321097009 | | ✓ | ✓ | ✓ | | | ✓ | ✓ | | ✓ **Längslenker** Aluminium |
| 20 | 59613 | 31352227203 | | ✓ | ✓ | ✓ | | | ✓ | ✓ | | 231 mm ✓ **3.2** |
| 21 | 19666/1 | 31121096685 | ✓ | | ✓ | ✓ | | | ✓ | ✓ | | **aussen/outside Stahl/steel** |
| 22 | 19666/2 | **Kit : 2 x 19666/1** | ✓ | | ✓ | ✓ | | | ✓ | ✓ | | **aussen/outside Stahl/steel** |

## BMW 3er E46 316i -> 330d 02/98→

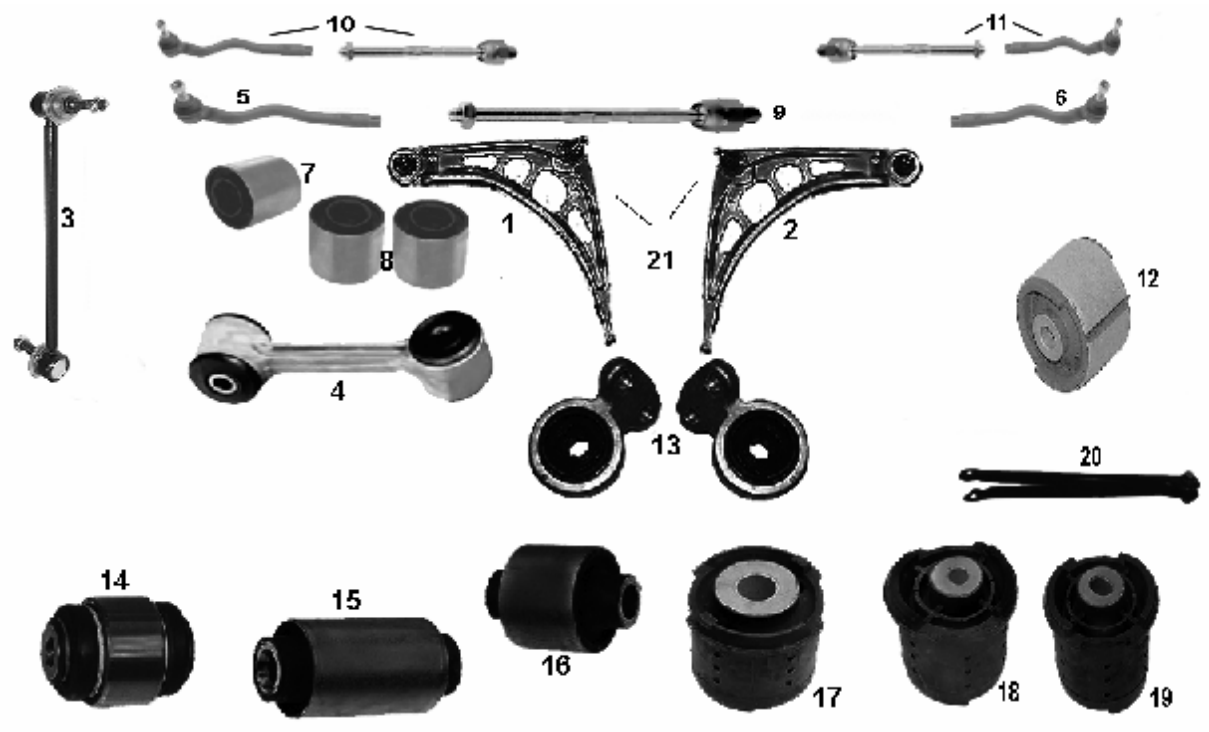


| NR | MAPCO | REF | | | ← | → | ↑ | ↓ | | | NEW | INFO |
|---|---|---|---|---|---|---|---|---|---|---|---|---|
| 1 | 49676/1 | 31136751317<br>31136752717 | ✓ | | ✓ | | | | ✓ | ✓ | | Aluminium |
| 2 | 49677/1 | 31136751318<br>31146752718 | ✓ | | | ✓ | | | ✓ | ✓ | | Aluminium<br>**mit Loch für Sensor zur Leuchtweitenregulierung Xenon-Licht** |
| 3 | 19700HPS | 31351095694 | ✓ | | ✓ | ✓ | | | ✓ | ✓ | | |
| 4 | 49799 | 33551094619 | | ✓ | ✓ | ✓ | | | ✓ | ✓ | | |
| 5 | 49653 | 32211095957 | ✓ | | ✓ | | | | ✓ | ✓ | | |
| 6 | 49654 | 32211095958 | ✓ | | | ✓ | | | ✓ | ✓ | | |
| 7 | 33933 | 31126750057 | ✓ | | ✓ | ✓ | | | ✓ | ✓ | | für 1 – 4 |
| 8 | 33933/2 | 31124000612 | ✓ | | ✓ | ✓ | | | ✓ | ✓ | | **axle kit** |
| 9 | 19676 | 32211095950 | ✓ | | ✓ | ✓ | | | ✓ | ✓ | | M12 x 1,25RHT |
| 10 | 19784 | 32211095955<br>32211096897 | ✓ | | ✓ | | | | ✓ | ✓ | | **5+9** |
| 11 | 19785 | 32211095956<br>32211096898 | ✓ | | | ✓ | | | ✓ | ✓ | | **6+9** |
| 12 | 33934 | 33321097009 | | ✓ | ✓ | ✓ | | | ✓ | ✓ | | ✓ **Längslenker** Aluminium |
| 13 | 36660 | 31121095278<br>31121096984<br>31121096983 | ✓ | | ✓ | ✓ | | | ✓ | ✓ | | **axle kit** |
| 14 | 59621 | 33321138722 | | ✓ | ✓ | ✓ | | | ✓ | ✓ | | **aussen/outside** |
| 15 | 36661 | 33321092248 | | ✓ | ✓ | ✓ | | | ✓ | ✓ | | **Innen/inner Stahl/steel 52,0x40,0x12,0 mm** |
| 16 | 36662 | 33321136311 | | ✓ | ✓ | ✓ | | | ✓ | ✓ | | **aussen/outside Stahl/steel 52,0x45,5x12,0 mm** |
| 17 | 36664 | 33311092517 | | ✓ | ✓ | ✓ | | | ✓ | ✓ | | **Ø Innen/inner 20,5 mm Ø aussen/outside 72,0 mm** |
| 18 | 36665 | 33311092515 | | ✓ | ✓ | | | | ✓ | ✓ | | |
| 19 | 36666 | 33311092516 | | ✓ | | ✓ | | | ✓ | ✓ | | |
| 20 | 59638 | 33321092237 | | ✓ | ✓ | ✓ | | ✓ | ✓ | ✓ | ✓ | |
| 21 | 53676 | | ✓ | | ✓ | ✓ | | | ✓ | ✓ | ✓ | **axle kit** |

## BMW Z4 E85 02/03→

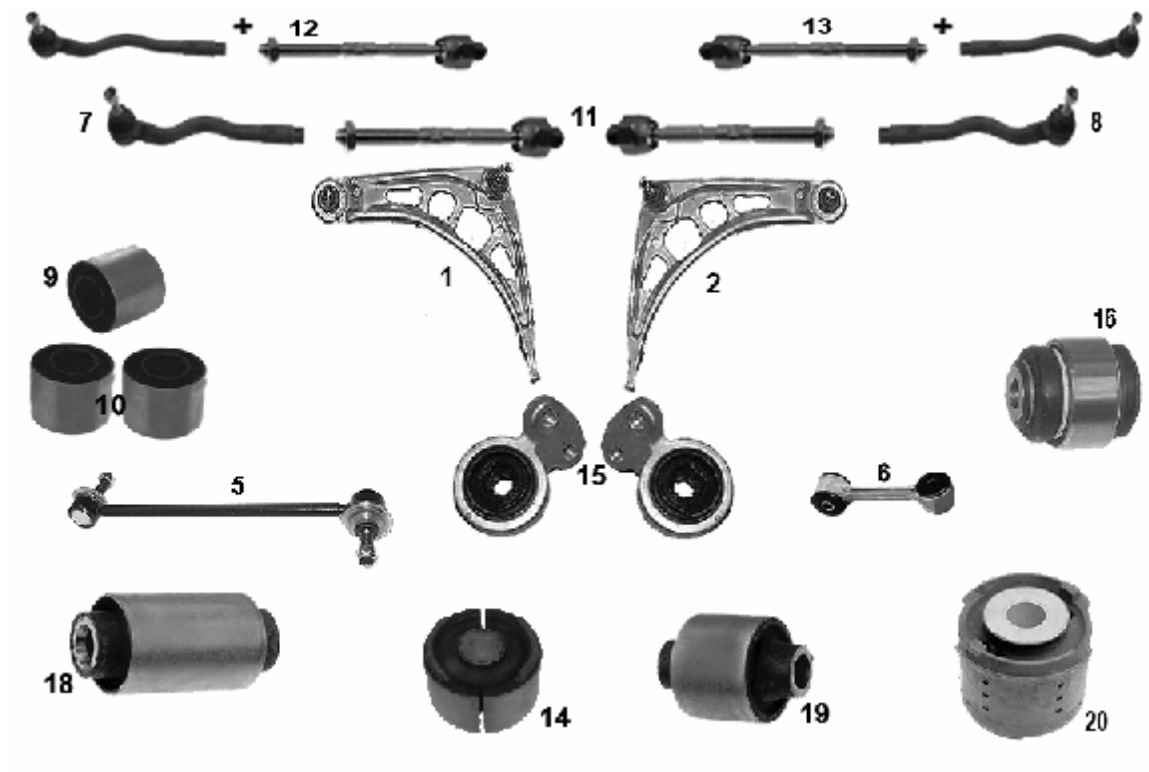


| NR | MAPCO | REF | | | ← | → | ↑ | ↓ | | | NEW | INFO |
|---|---|---|---|---|---|---|---|---|---|---|---|---|
| 1 | **49676/1** | 31136751317 | ✓ | | ✓ | | | | ✓ | ✓ | | Aluminium |
| 2 | **49677/1** | 31136751318 | ✓ | | | ✓ | | | ✓ | ✓ | | Aluminium **mit Loch für Sensor zur Leuchtweitenregulierung Xenon-Licht** |
| 5 | **19700HPS** | 31351095694 | ✓ | | ✓ | ✓ | | | ✓ | ✓ | | |
| 6 | **49799** | 33551094619 | | ✓ | ✓ | ✓ | | | ✓ | ✓ | | |
| 7 | **49653** | 32211095957 | ✓ | | ✓ | | | | ✓ | ✓ | | |
| 8 | **49654** | 32211095958 | ✓ | | | ✓ | | | ✓ | ✓ | | |
| 9 | **33933** | 31126750057 | ✓ | | ✓ | ✓ | | | ✓ | ✓ | | für 1 – 4 |
| 10 | **33933/2** | **Kit : 2 x 33633** | ✓ | | ✓ | ✓ | | | ✓ | ✓ | | **axle kit** |
| 11 | **19676** | 32211095950 | ✓ | | ✓ | ✓ | | | ✓ | ✓ | | M12 x 1,25RHT |
| 12 | **19784** | 32211095955 | ✓ | | ✓ | | | | ✓ | ✓ | | **7 + 11** |
| 13 | **19785** | 32211095956 | ✓ | | | ✓ | | | ✓ | ✓ | | **8 + 11** |
| 14 | **33934** | 33321097009 | | ✓ | ✓ | ✓ | | | ✓ | ✓ | | für **Längslenker** Aluminium |
| 15 | **36660** | 31121095278 | ✓ | | ✓ | ✓ | | | ✓ | ✓ | | **axle kit** |
| 16 | **59621** | 33321138722 | | ✓ | ✓ | ✓ | | | ✓ | ✓ | | **aussen/outside** |
| 18 | **36661** | 33321092248 | | ✓ | ✓ | ✓ | | | ✓ | ✓ | | **Innen/inner Stahl/steel 52,0x40,0x12,0 mm** |
| 19 | **36662** | 33321136311 | | ✓ | ✓ | ✓ | | | ✓ | ✓ | | **aussen/outside Stahl/steel 52,0x45,5x12,0 mm** |
| 20 | **36664** | 33311092517 | | ✓ | ✓ | ✓ | | | ✓ | ✓ | | **Ø Innen/inner 20,5 mm Ø aussen/outside 72,0 mm** |

## BMW X3 E83 01/04→

| NR | MAPCO | REF | | | ← | → | ↑ | ↓ | | | NEW | INFO |
|---|---|---|---|---|---|---|---|---|---|---|---|---|
| 1 | 36665 | 33311092515 | | ✓ | ✓ | | | | ✓ | ✓ | | |
| 2 | 36666 | 33311092516 | | ✓ | | ✓ | | | ✓ | ✓ | | |
| 3 | 51630 | 31103412137 | | ✓ | ✓ | | | ✓ | ✓ | ✓ | ✓ | |
| 4 | 51631 | 31103412138 | | ✓ | | ✓ | | ✓ | ✓ | ✓ | ✓ | |
| | | | | | | | | | | | | |
| | | | | | | | | | | | | |
| | | | | | | | | | | | | |

## BMW 3er E9_ 01/05→

| NR | MAPCO | REF | | | ← | → | ↑ | ↓ | | | NEW | INFO |
|---|---|---|---|---|---|---|---|---|---|---|---|---|
| 1 | 51634 | 31126763699 | ✓ | | ✓ | | | ✓ | ✓ | ✓ | ✓ | Konus 16,0 mm |
| 2 | 51635 | 31126763700 | ✓ | | | ✓ | | ✓ | ✓ | ✓ | ✓ | Konus 16,0 mm |
| | | | | | | | | | | | | |
| | | | | | | | | | | | | |
| | | | | | | | | | | | | |

**BMW 5er E28 518i + 520i + 524td + 525i.e. + 528i + 535i** 06/81 → 12/87
**BMW 5er E24 628csi + 630cs + 633csi + 635csi** 06/82 → 08/89

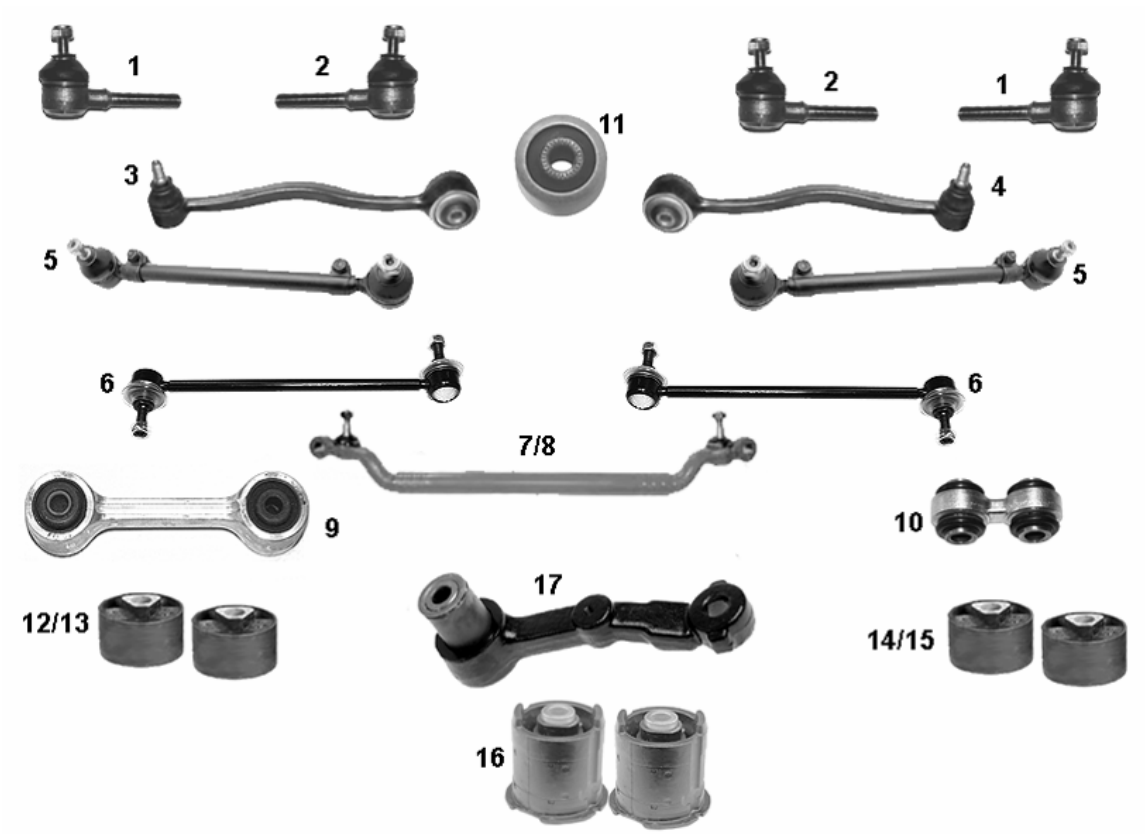


| NR | MAPCO | REF | | | ← | → | ↑ | ↓ | | | NEW | INFO |
|---|---|---|---|---|---|---|---|---|---|---|---|---|
| 1 | 19669 | 32211135820 | ✓ | | ✓ | ✓ | | | ✓ | ✓ | | M14x1,5RHT |
| 2 | 19668 | 32211135819 | ✓ | | ✓ | ✓ | | | ✓ | ✓ | | M14x1,5LHT |
| 3 | 19673 | 31121131588<br>31121139991 | ✓ | | ✓ | | | | ✓ | ✓ | | |
| 4 | 19674 | 31121131587<br>31121139992 | ✓ | | | ✓ | | | ✓ | ✓ | | |
| 5 | 19675 | 32211135666 | ✓ | | ✓ | ✓ | | | ✓ | ✓ | | |
| 6 | 19678HPS | 31351134582 | ✓ | | ✓ | ✓ | | | ✓ | ✓ | | |
| 7 | 49730 | 32211129014 | ✓ | | ✓ | ✓ | | | ✓ | ✓ | | Ø 28 mm |
| 8 | 49731 | 32211129017 | ✓ | | ✓ | ✓ | | | ✓ | ✓ | | Ø 26 mm |
| 9 | 49786 | 33551126932 | | ✓ | ✓ | ✓ | | | ✓ | ✓ | | |
| 10 | 49788 | 33321126476 | | ✓ | ✓ | ✓ | | | ✓ | ✓ | | |
| 11 | 33691 | 31121124622 | ✓ | | ✓ | ✓ | | | ✓ | ✓ | | **für/ for 19673/74** |
| 12 | 33637 | 31129058816 | ✓ | | ✓ | ✓ | | | ✓ | ✓ | | ✓ E28 518, 518i, 520i, 525e |
| 13 | 33637/2 | Kit : 2 x 33637 | ✓ | | ✓ | ✓ | | | ✓ | ✓ | | ✓ E28 518, 518i, 520i, 525e |
| 14 | 33641 | 31129058818 | ✓ | | ✓ | ✓ | | | ✓ | ✓ | | ✓ **E28** 520i, 525e PRO, 525d+td, 525i, 528i |
| 15 | 33641/2 | Kit : 2 x 33641 | ✓ | | ✓ | ✓ | | | ✓ | ✓ | | ✓ **E28** 520i, 525e PRO, 525d+td, 525i, 528i |
| 16 | 33695 | 33311130488 | | ✓ | ✓ | ✓ | | | ✓ | ✓ | | **15x70x85 mm** |
| 16 | 33695/2 | Kit : 2 x 33695 | | ✓ | ✓ | ✓ | | | ✓ | ✓ | | **axle kit 15x70x85 mm** |
| 17 | 49657 | 32211136450 | ✓ | | ✓ | ✓ | | | ✓ | ✓ | | |
| | | | | | | | | | | | | |

## BMW 5er E34 518i + 520i + 524td + 525i + 530i + 535i — 01/88 → 01/97
## BMW 5er E34 M5 + 525tds + 525tds Touring — 1991→ 01/97

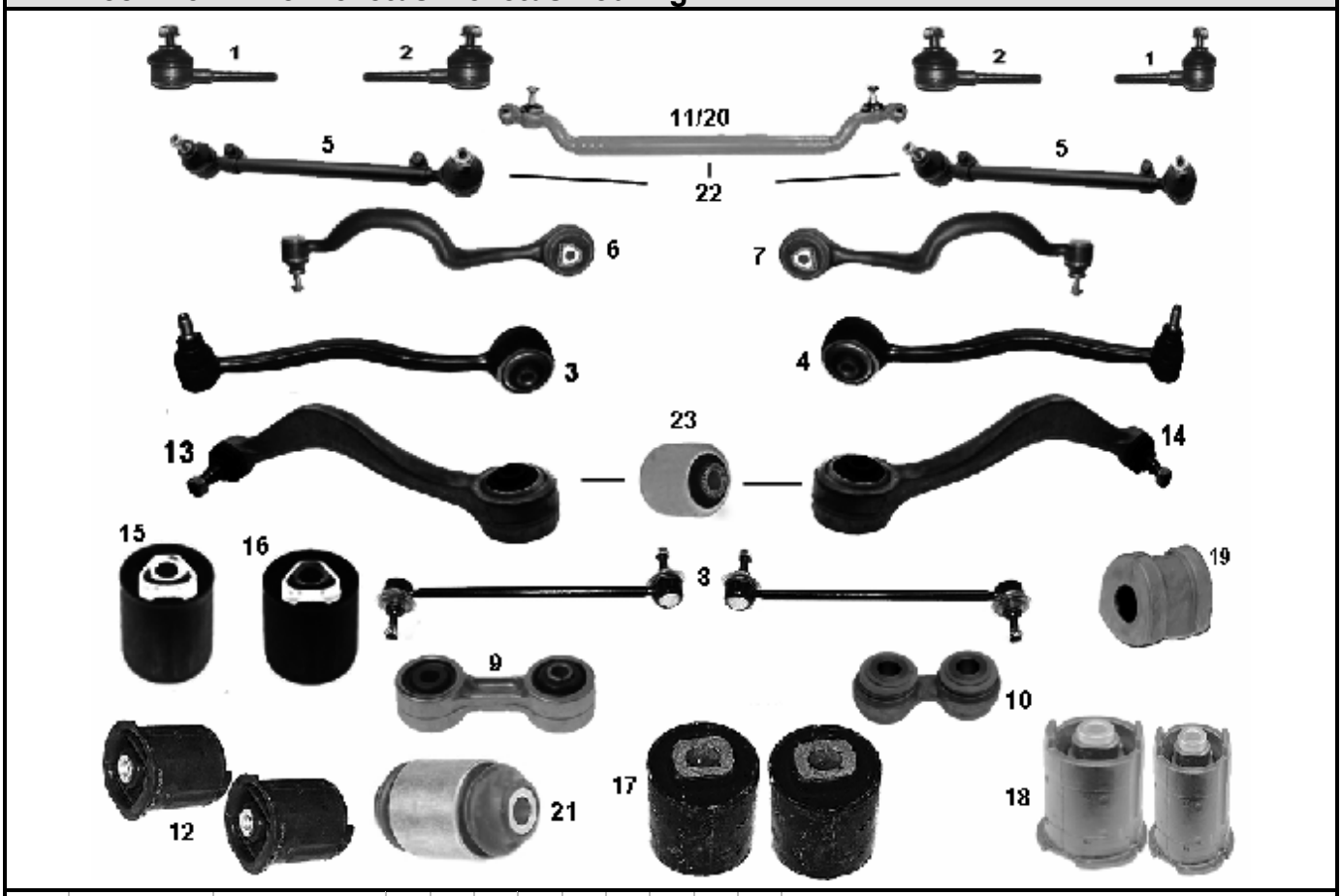


| NR | MAPCO | REF | | | ← | → | ↑ | ↓ | | | NEW | INFO |
|---|---|---|---|---|---|---|---|---|---|---|---|---|
| 1 | 19669 | 32211135820 | ✓ | | ✓ | ✓ | | | ✓ | ✓ | | M14x1,5RHT |
| 2 | 19668 | 32211135819 | ✓ | | ✓ | ✓ | | | ✓ | ✓ | | M14x1,5LHT |
| 3 | 19673 | 31121131587 | ✓ | | ✓ | | | | ✓ | ✓ | | |
| 4 | 19674 | 31121131588 | ✓ | | | ✓ | | | ✓ | ✓ | | |
| 5 | 19675 | 32211135666 | ✓ | | ✓ | ✓ | | | ✓ | ✓ | | |
| 6 | 19698 | 31121141097 | ✓ | | ✓ | | ✓ | | ✓ | ✓ | | |
| 7 | 19699 | 31121141098 | ✓ | | | ✓ | ✓ | | ✓ | ✓ | | |
| 8 | 19678HPS | 31351134582 | ✓ | | ✓ | ✓ | | | ✓ | ✓ | | |
| 9 | 49787 | 33551135307 | | ✓ | ✓ | ✓ | | | ✓ | ✓ | | |
| 10 | 49788 | 33321126476 | | ✓ | ✓ | ✓ | | | ✓ | ✓ | | |
| 11 | 49660 | 32211138854 | ✓ | | ✓ | ✓ | | | ✓ | ✓ | | **518i** |
| 12 | 33690 | 33311129760 | | ✓ | ✓ | ✓ | | | ✓ | ✓ | | **15 X 80 X 85 mm** |
| 12 | 33690/2 | **Kit : 2 x 33690** | | ✓ | ✓ | ✓ | | | ✓ | ✓ | | **axle kit 15 X 80 X 85 mm** |
| 13 | 49661 | 31121139987 | ✓ | | ✓ | | | | ✓ | ✓ | | Aluminium |
| 14 | 49662 | 31121139988 | ✓ | | | ✓ | | | ✓ | ✓ | | Aluminium |
| 15 | 33638 | 31121136606 | ✓ | | ✓ | ✓ | ✓ | | ✓ | ✓ | | ✓ 524TD, 525TD+TDS, 530i,535i,540i |
| 16 | 33639 | 31121136605 | ✓ | | ✓ | ✓ | ✓ | | ✓ | ✓ | | ✓ 520i, 525i |
| 17 | 33694 | 33171131903 | | ✓ | ✓ | ✓ | | | ✓ | ✓ | | **51 X 60 mm** |
| 17 | 33694/2 | **Kit : 2 x 33694** | | ✓ | ✓ | ✓ | | | ✓ | ✓ | | **axle kit 51 X 60 mm** |
| 18 | 33695 | 33311130488 | | ✓ | ✓ | ✓ | | | ✓ | ✓ | | **15 X 70 X 85 mm** |
| 18 | 33695/2 | **Kit : 2 x 33695** | | ✓ | ✓ | ✓ | | | ✓ | ✓ | | **axle kit 15 X 70 X 85 mm** |
| 19 | 33697 | 31351133738 | ✓ | | ✓ | ✓ | | | ✓ | ✓ | | |
| 20 | 19786 | 32211136683 | ✓ | | ✓ | ✓ | | | ✓ | ✓ | | ✓ 518i + 518g |
| 21 | 36663 | 33321135808 | | ✓ | ✓ | ✓ | | | ✓ | ✓ | | |
| 22 | 59627 | | ✓ | | ✓ | ✓ | | | ✓ | ✓ | | **( 2x 19675 + 1x 49660 ) 518i** |
| 23 | 36670 | 31121133236 | ✓ | | ✓ | ✓ | | ✓ | ✓ | ✓ | ✓ | |

## BMW 5er E39 11/95→05/04

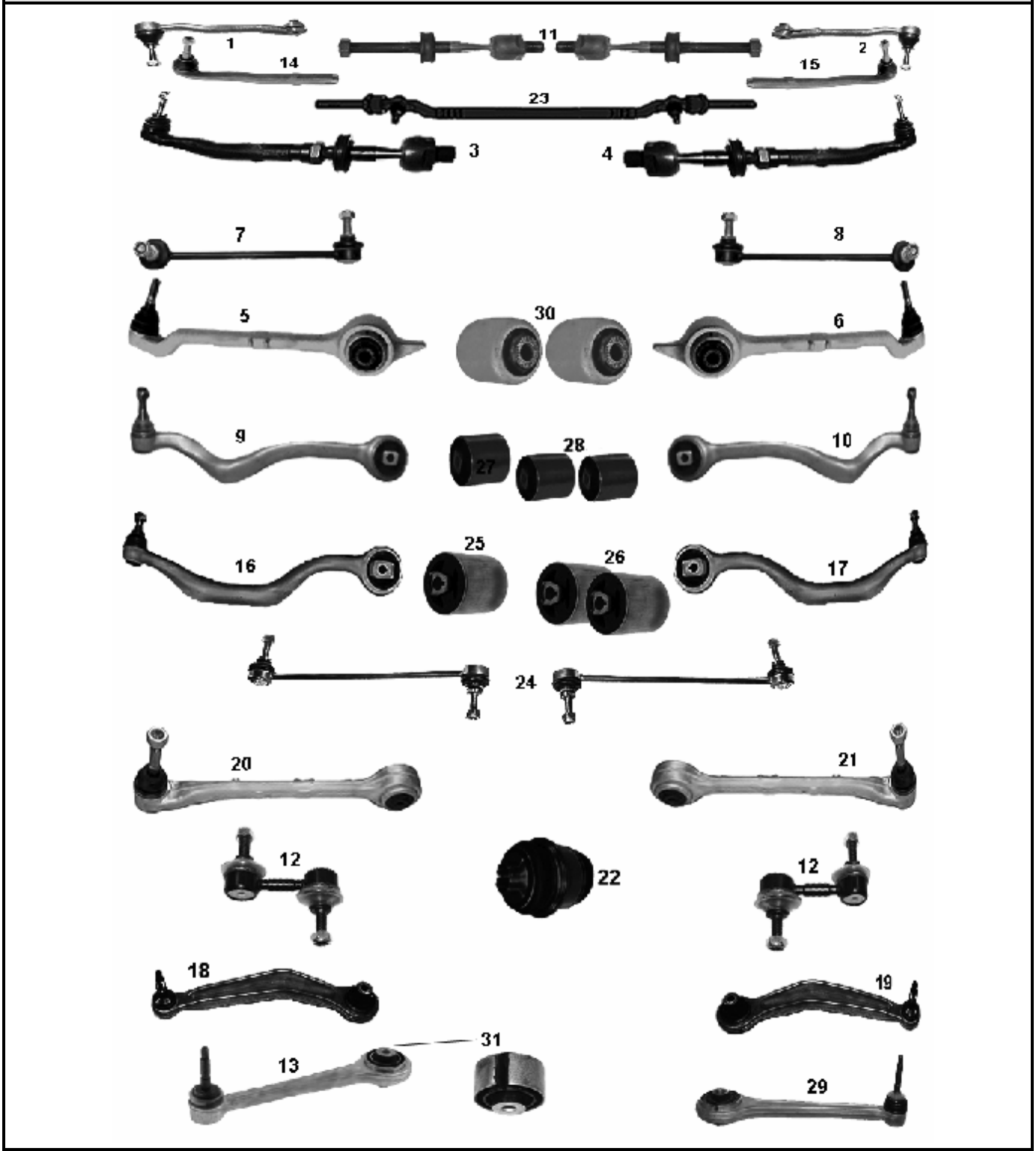


| NR | MAPCO | REF | | | ← | → | ↑ | ↓ | | | NEW | INFO |
|---|---|---|---|---|---|---|---|---|---|---|---|---|
| 1 | 49735 | 32211091723 | ✓ | | ✓ | | | | ✓ | ✓ | | ✓ 535i + 540i |
| 2 | 49736 | 32211091724 | ✓ | | | ✓ | | | ✓ | ✓ | | ✓ 535i + 540i |
| 3 | 49721 | 32111094673 | ✓ | | ✓ | | | | ✓ | ✓ | | ✓ 520i + 523 + 525 + 528 |
| 4 | 49722 | 32111094674 | ✓ | | | ✓ | | | ✓ | ✓ | | ✓ 520i + 523 + 525 + 528 |
| 5 | 49723 | 31121093449 | ✓ | | ✓ | | | ✓ | ✓ | ✓ | | Aluminium |
| 6 | 49724 | 31121093450 | ✓ | | | ✓ | | ✓ | ✓ | ✓ | | Aluminium |

**Fortsetzung / continued Seite/page 36**

Fortsetzung / continued von/from Seite/page 35

## BMW 5er E39 11/95→05/04

| NR | MAPCO | REF | | | ← | → | ↑ | ↓ | | | NEW | INFO |
|---|---|---|---|---|---|---|---|---|---|---|---|---|
| 7 | 49725HPS | 31351091855 | ✓ | | ✓ | | | | ✓ | ✓ | | |
| 8 | 49726HPS | 31351091856 | ✓ | | | ✓ | | | ✓ | ✓ | | |
| 9 | 49727 | 31121141717 | ✓ | | ✓ | | ✓ | | ✓ | ✓ | | |
| 10 | 49728 | 31121141718 | ✓ | | | ✓ | ✓ | | ✓ | ✓ | | |
| 11 | 49746 | 32111091769 | ✓ | | ✓ | ✓ | | | ✓ | ✓ | | |
| 12 | 49663HPS | 33551092292 | | ✓ | ✓ | ✓ | | | ✓ | ✓ | | |
| 13 | 49652 | 33321090745 | | ✓ | ✓ | ✓ | ✓ | | ✓ | ✓ | | |
| 14 | 19782 | 32111091769 | ✓ | | ✓ | | | | ✓ | ✓ | | ✓ 520i + 523 + 525 + 528 |
| 15 | 19783 | 32111091770 | ✓ | | | ✓ | | | ✓ | ✓ | | ✓ 520i + 523 + 525 + 528 |
| 16 | 59615 | 31121092609 | ✓ | | ✓ | | ✓ | | ✓ | ✓ | | |
| 17 | 59616 | 31121092610 | ✓ | | | ✓ | ✓ | | ✓ | ✓ | | |
| 18 | 59619 | 33321090815 | | ✓ | ✓ | | | ✓ | ✓ | ✓ | | |
| 19 | 59620 | 33321090816 | | ✓ | | ✓ | | ✓ | ✓ | ✓ | | |
| 20 | 59617 | 31121141961 | ✓ | | ✓ | | | ✓ | ✓ | ✓ | | |
| 21 | 59618 | 31121141962 | ✓ | | | ✓ | | ✓ | ✓ | ✓ | | |
| 22 | 59622 | 33321090504 | | ✓ | ✓ | ✓ | | | ✓ | ✓ | | |
| 23 | 59624 | 32211096059 | ✓ | | ✓ | ✓ | | | ✓ | ✓ | | **Linkslenker / LHD** |
| 24 | 59628 | 31351095664 | ✓ | | ✓ | ✓ | | | ✓ | ✓ | | ✓ **535i + 540i, M5** |
| 25 | 36668 | 31121141752 | ✓ | | ✓ | ✓ | ✓ | | ✓ | ✓ | | ✓ **16 +17** |
| 26 | 36668/2 | **KIT 2x36668** | ✓ | | ✓ | ✓ | ✓ | | ✓ | ✓ | | ✓ **16 +17** |
| 27 | 33669 | 31129068753 | ✓ | | ✓ | ✓ | ✓ | | ✓ | ✓ | | ✓ **9+10** |
| 28 | 33669/2 | **KIT 2x33669** | ✓ | | ✓ | ✓ | ✓ | | ✓ | ✓ | | ✓ **9+10** |
| 29 | 59637 | 33322282065 | | ✓ | ✓ | ✓ | ✓ | | ✓ | ✓ | | L=212,0mm 12/01- |
| 30 | 36687/2 | 31121092019 | ✓ | | ✓ | ✓ | | ✓ | ✓ | ✓ | ✓ | ✓ **5+6** |
| 31 | 36688 | 33321090102 | | ✓ | ✓ | ✓ | ✓ | | ✓ | ✓ | ✓ | ✓ **13** |

## BMW X5er E53 05/00→

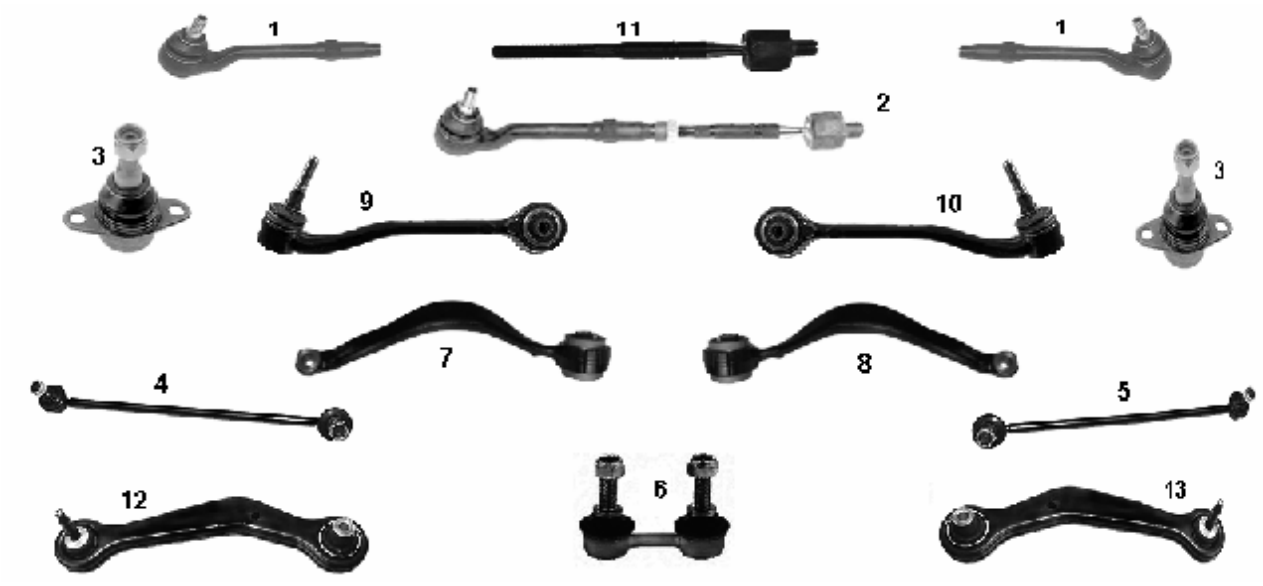


| NR | MAPCO | REF | | | ← | → | ↑ | ↓ | | | NEW | INFO |
|---|---|---|---|---|---|---|---|---|---|---|---|---|
| 1 | 59600 | 32211096327 | ✓ | | ✓ | ✓ | | | ✓ | ✓ | | |
| 2 | 59601 | 32216751277 | ✓ | | ✓ | ✓ | | | ✓ | ✓ | | |
| 3 | 59602 | 31126756491 | ✓ | | ✓ | ✓ | | | ✓ | ✓ | | |
| 4 | 59603HPS | 31356750703 | ✓ | | ✓ | | | | ✓ | ✓ | | |
| 5 | 59604HPS | 31356750704 | ✓ | | | ✓ | | | ✓ | ✓ | | |
| 6 | 59605 | 33551096735 | | ✓ | ✓ | ✓ | | | ✓ | ✓ | | |
| 7 | 59606 | 31121096169 | ✓ | | ✓ | | | ✓ | ✓ | ✓ | | |
| 8 | 59607 | 31121096170 | ✓ | | | ✓ | | ✓ | ✓ | ✓ | | |
| 9 | 59608 | 31126760275 | ✓ | | ✓ | | ✓ | | ✓ | ✓ | | |
| 10 | 59609 | 31126760276 | ✓ | | | ✓ | ✓ | | ✓ | ✓ | | |
| 11 | 59610 | 32216751277 | ✓ | | ✓ | ✓ | | | ✓ | ✓ | | M14 x 1,5 RHT |
| 12 | 59611 | 33321095411 | | ✓ | ✓ | | | | ✓ | ✓ | | |
| 13 | 59612 | 33321095412 | | ✓ | | ✓ | | | ✓ | ✓ | | |

## BMW 5er E60,E61 / M5 09/04→

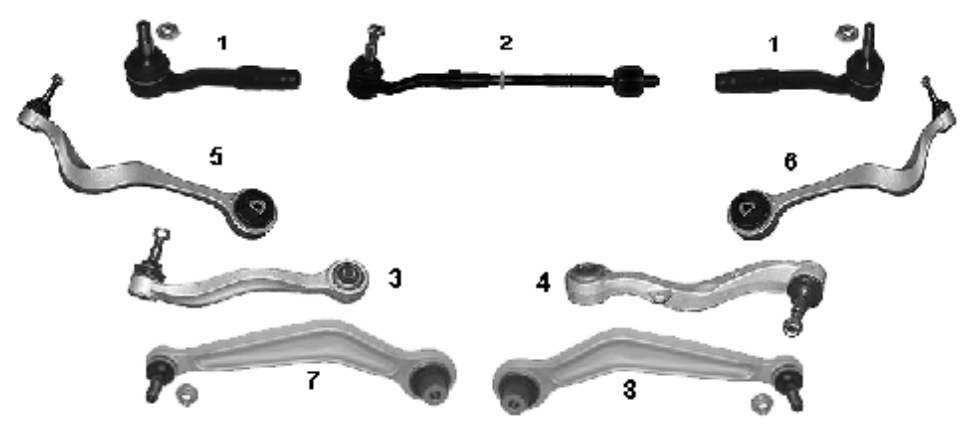


| NR | MAPCO | REF | | | ← | → | ↑ | ↓ | | | NEW | INFO |
|---|---|---|---|---|---|---|---|---|---|---|---|---|
| 1 | 59626 | 32216756369 | ✓ | | ✓ | ✓ | | | ✓ | ✓ | | M16x1,5RHT |
| 2 | 51638 | 32216762403 | ✓ | | ✓ | ✓ | | | ✓ | ✓ | ✓ | |
| 3 | 51632 | 31126760181 | ✓ | | ✓ | | | ✓ | ✓ | ✓ | ✓ | |
| 4 | 51633 | 31126760182 | ✓ | | | ✓ | | ✓ | ✓ | ✓ | ✓ | |
| 5 | 51636 | 31126765995 | ✓ | | ✓ | | ✓ | | ✓ | ✓ | ✓ | |
| 6 | 51637 | 31126765996 | ✓ | | | ✓ | ✓ | | ✓ | ✓ | ✓ | |
| 7 | 59635 | 33326767759 | | ✓ | ✓ | | ✓ | | ✓ | ✓ | | |
| 8 | 59636 | 33326767760 | | ✓ | | ✓ | ✓ | | ✓ | ✓ | | |

## BMW 6er E63 01/04→

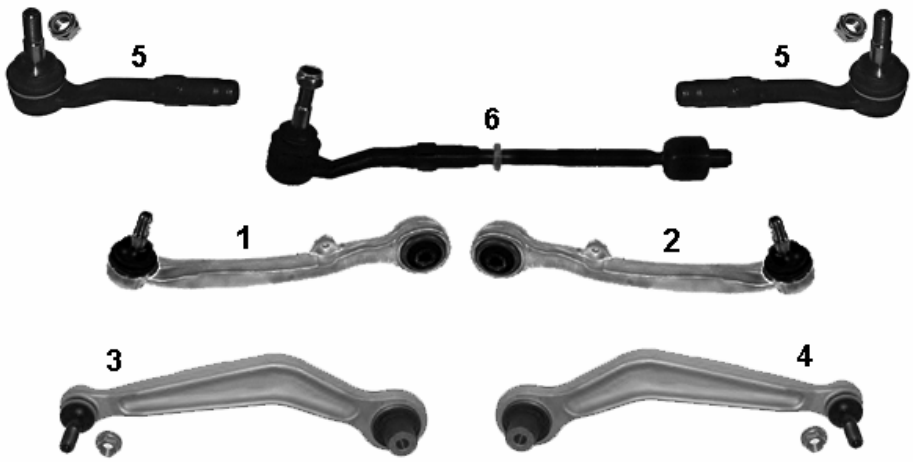


| NR | MAPCO | REF | | | ← | → | ↑ | ↓ | | | NEW | INFO |
|---|---|---|---|---|---|---|---|---|---|---|---|---|
| 1 | 59629 | 31126755835 | ✓ | | ✓ | | | | ✓ | ✓ | | ☑ 645 Ci |
| 2 | 59630 | 31126755836 | ✓ | | | ✓ | | | ✓ | ✓ | | ☑ 645 Ci |
| 3 | 59635 | 33326767759 | | ✓ | ✓ | | ✓ | | ✓ | ✓ | ✓ | ☑ 645 Ci |
| 4 | 59636 | 33326767760 | | ✓ | | ✓ | ✓ | | ✓ | ✓ | ✓ | ☑ 645 Ci |
| 5 | 59626 | 32216756369 | ✓ | | ✓ | ✓ | | | ✓ | ✓ | | M16x1,5RHT |
| 6 | 51638 | 32216762403 | ✓ | | ✓ | ✓ | | | ✓ | ✓ | ✓ | |
| | | | | | | | | | | | | |

## BMW 7er E32 730i/iL + 735i/iL + 740i/iL + 750i/iL 01/88→ 09/94

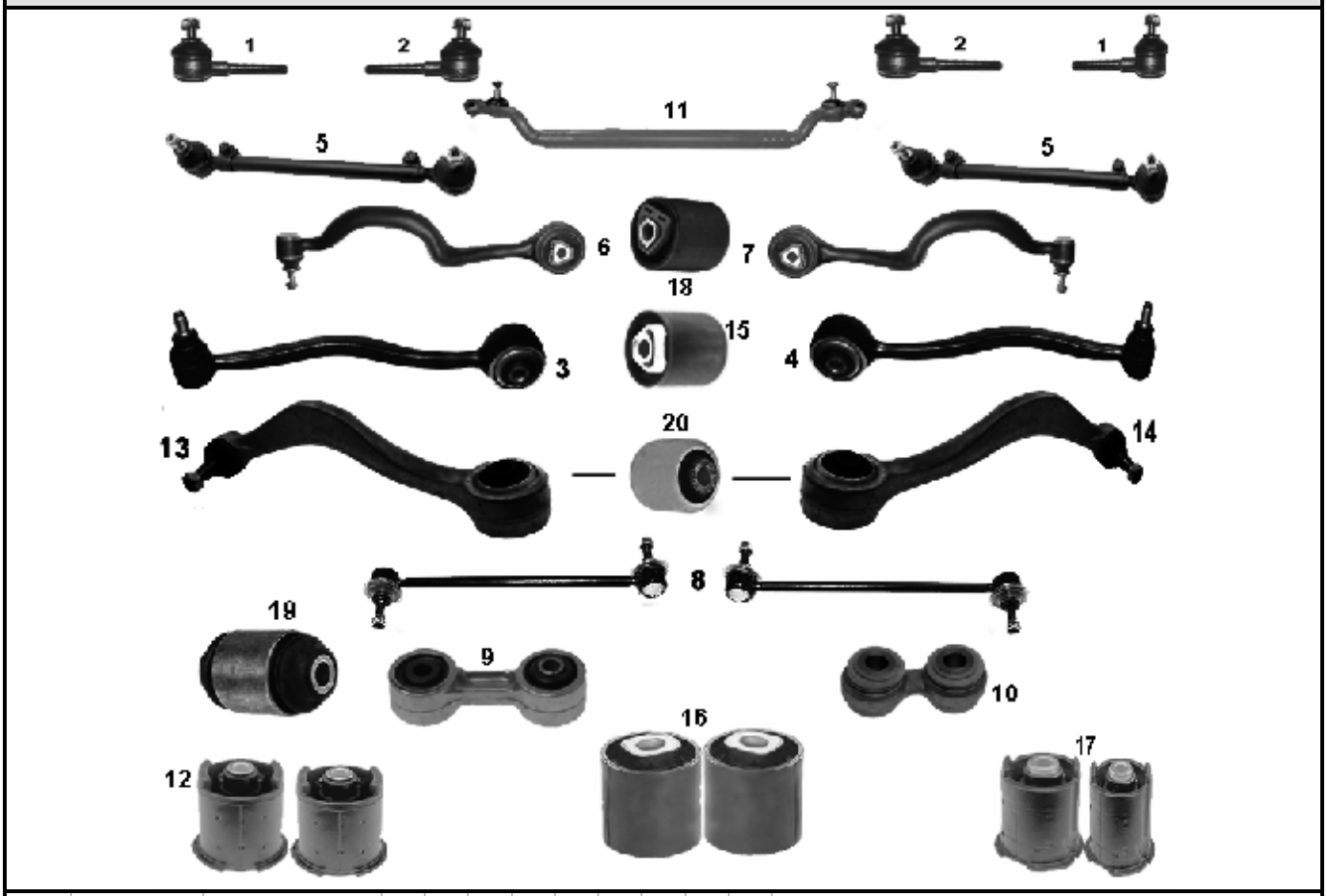


| NR | MAPCO | REF | | | ← | → | ↑ | ↓ | | | NEW | INFO |
|---|---|---|---|---|---|---|---|---|---|---|---|---|
| 1 | 19669 | 32211135820 | ✓ | | ✓ | ✓ | | | ✓ | ✓ | | M14x1,5RHT |
| 2 | 19668 | 32211135819 | ✓ | | ✓ | ✓ | | | ✓ | ✓ | | M14x1,5LHT |
| 3 | 19673 | 31121131587 | ✓ | | ✓ | | | | ✓ | ✓ | | |
| 4 | 19674 | 31121131588 | ✓ | | | ✓ | | | ✓ | ✓ | | |
| 5 | 19675 | 32211135666 | ✓ | | ✓ | ✓ | | | ✓ | ✓ | | |
| 6 | 49678 | 31121139999 | ✓ | | ✓ | | ✓ | | ✓ | ✓ | | |
| 7 | 49679 | 31121140000 | ✓ | | | ✓ | ✓ | | ✓ | ✓ | | |
| 8 | 19678HPS | 31351134582 | ✓ | | ✓ | ✓ | | | ✓ | ✓ | | |
| 9 | 49787 | 33551135307 | | ✓ | ✓ | ✓ | | | ✓ | ✓ | | |
| 10 | 49788 | 33321126476 | | ✓ | ✓ | ✓ | | | ✓ | ✓ | | |
| 11 | 49658 | 32211138850 | ✓ | | ✓ | ✓ | | | ✓ | ✓ | | |
| 12 | 33690 | 33311129760 | | ✓ | ✓ | ✓ | | | ✓ | ✓ | | **15 X 80 X 85 mm** |
| 12 | 33690/2 | **Kit : 2 x 33690** | | ✓ | ✓ | ✓ | | | ✓ | ✓ | | **axle kit 15 X 80 X 85 mm** |
| 13 | 49661 | 31121139987 | ✓ | | ✓ | | | | ✓ | ✓ | | Aluminium |
| 14 | 49662 | 31121139988 | ✓ | | | ✓ | | | ✓ | ✓ | | Aluminium |
| 15 | 33638 | 3112 1136 606<br>3112 1139 456 | ✓ | | ✓ | ✓ | ✓ | | ✓ | ✓ | | ✓ **730i, 735i** |
| 16 | 33694 | 33171131903 | | ✓ | ✓ | ✓ | | | ✓ | ✓ | | **51 X 60 mm** |
| 16 | 33694/2 | **Kit : 2 x 33694** | | ✓ | ✓ | ✓ | | | ✓ | ✓ | | **axle kit 51 X 60 mm** |
| 17 | 33695 | 33311130488 | | ✓ | ✓ | ✓ | | | ✓ | ✓ | | **15 X 70 X 85 mm** |
| 17 | 33695/2 | **Kit : 2 x 33695** | | ✓ | ✓ | ✓ | | | ✓ | ✓ | | **axle kit 15 X 70 X 85 mm** |
| 18 | 33666 | 31121136607 | ✓ | | ✓ | | ✓ | | ✓ | ✓ | | ✓ 730i, 735i, 740i **(grün)** |
| 19 | 36663 | 33321135808 | | ✓ | ✓ | ✓ | | | ✓ | ✓ | | |
| 20 | 36670 | 31121133236 | ✓ | | ✓ | ✓ | | ✓ | ✓ | ✓ | ✓ | |

## BMW 7er E38 730iL + 740iL + 750iL 10/94→ 11/01

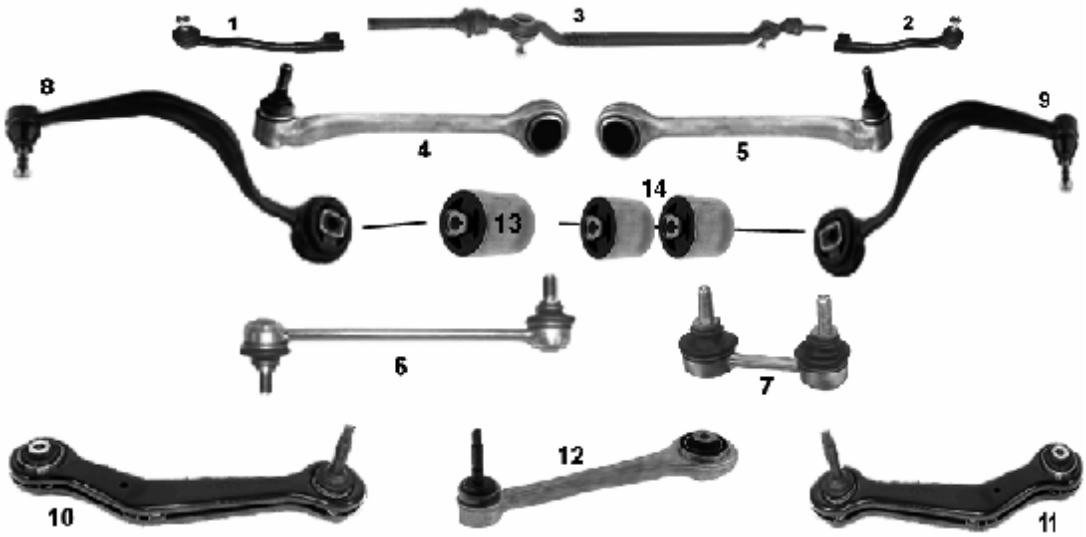


| NR | MAPCO | REF | | | ← | → | ↑ | ↓ | | | NEW | INFO |
|---|---|---|---|---|---|---|---|---|---|---|---|---|
| 1 | 49739 | 32211141345 | ✓ | | ✓ | | | | ✓ | ✓ | | M16x1,5 |
| 2 | 49740 | 32211141346 | ✓ | | | ✓ | | | ✓ | ✓ | | M16x1,5 |
| 3 | 49741 | 32211096057 | ✓ | | ✓ | ✓ | | | ✓ | ✓ | | |
| 4 | 49694 | 31121142087 | ✓ | | ✓ | | | | ✓ | ✓ | | Aluminium |
| 5 | 49695 | 31121142088 | ✓ | | | ✓ | | | ✓ | ✓ | | Aluminium |
| 6 | 49795 | 31351095695 | ✓ | | ✓ | ✓ | | | ✓ | ✓ | | |
| 7 | 49796 | 33551091497 | | ✓ | ✓ | ✓ | | | ✓ | ✓ | | |
| 8 | 49650 | 31121141723 | ✓ | | ✓ | | ✓ | | ✓ | ✓ | | |
| 9 | 49651 | 31121141724 | ✓ | | | ✓ | ✓ | | ✓ | ✓ | | |
| 10 | 49655 | 33321090905 | | ✓ | ✓ | | | | ✓ | ✓ | | |
| 11 | 49656 | 33321090906 | | ✓ | | ✓ | | | ✓ | ✓ | | |
| 12 | 49652 | 33321090745 | | ✓ | ✓ | ✓ | ✓ | | ✓ | ✓ | | |
| 13 | 36668 | 31121141752 | ✓ | | ✓ | ✓ | ✓ | | ✓ | ✓ | | ✓ 8+9 |
| 14 | 36668/2 | KIT 2x36668 | ✓ | | ✓ | ✓ | ✓ | | ✓ | ✓ | | ✓ 8+9 |

## BMW 7er E65, E66 730d -> 760 i,iL 11/01→

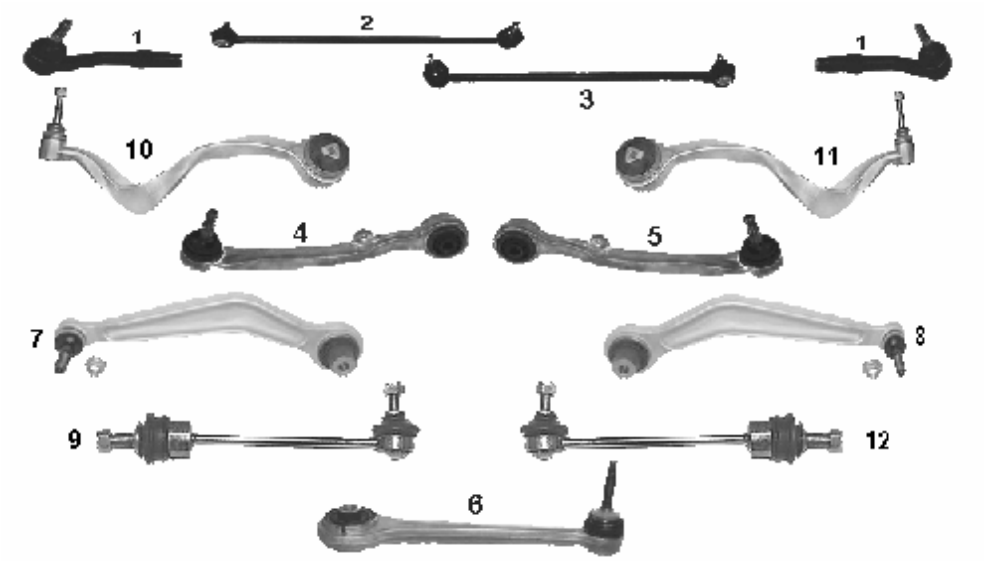


| NR | MAPCO | REF | | | ← | → | ↑ | ↓ | | | NEW | INFO |
|---|---|---|---|---|---|---|---|---|---|---|---|---|
| 1 | **59626** | 32216756369 | ✓ | | ✓ | ✓ | | | ✓ | ✓ | | M16x1,5RHT |
| 2 | **59623** | 31356753767 | ✓ | | ✓ | | | | ✓ | ✓ | | L=426 mm |
| 3 | **59631** | 31356753768 | ✓ | | | ✓ | | | ✓ | ✓ | | |
| 4 | **59629** | 31126755835 | ✓ | | ✓ | | | | ✓ | ✓ | | |
| 5 | **59630** | 31126755836 | ✓ | | | ✓ | | | ✓ | ✓ | | |
| 6 | **59637** | 33322282065 | | ✓ | ✓ | ✓ | ✓ | | ✓ | ✓ | | L=212 mm |
| 7 | **59635** | 33326767759 | | ✓ | ✓ | | ✓ | | ✓ | ✓ | | |
| 8 | **59636** | 33326767760 | | ✓ | | ✓ | ✓ | | ✓ | ✓ | | |
| 9 | **59632** | 33556757460 | | ✓ | ✓ | ✓ | ✓ | | ✓ | ✓ | | L=212 mm |
| 10 | **59633** | 31124026453 | ✓ | | ✓ | | ✓ | | ✓ | ✓ | | |
| 11 | **59634** | 31124026454 | ✓ | | | ✓ | ✓ | | ✓ | ✓ | | |
| 12 | **59639** | 33556753770 | | ✓ | ✓ | ✓ | | | ✓ | | | ✓ dynamic drive |

## BMW E31 850i - 850ci - 850csi 08/89→12/99

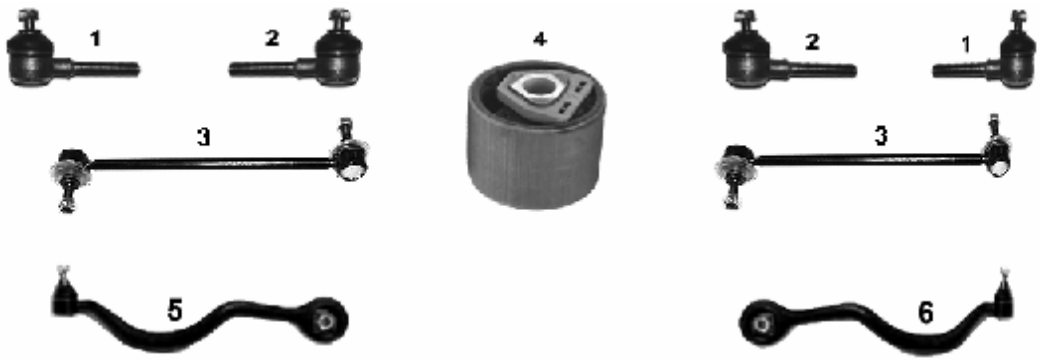


| NR | MAPCO | REF | | | ← | → | ↑ | ↓ | | | NEW | INFO |
|---|---|---|---|---|---|---|---|---|---|---|---|---|
| 1 | **19669** | 32211135820 | ✓ | | ✓ | ✓ | | | ✓ | ✓ | | M14x1,5RHT |
| 2 | **19668** | 32211135819 | ✓ | | ✓ | ✓ | | | ✓ | ✓ | | M14x1,5LHT |
| 3 | **19678HPS** | 31351134582 | ✓ | | ✓ | ✓ | | | ✓ | ✓ | | |
| 4 | **33666** | 31121136607 | ✓ | | ✓ | ✓ | ✓ | | ✓ | ✓ | | **(grün)** |
| 5 | **49678** | 31121139999 | ✓ | | ✓ | | ✓ | | ✓ | ✓ | | |
| 6 | **49679** | 31121140000 | ✓ | | | ✓ | ✓ | | ✓ | ✓ | | |

# CHEVROLET

## CHEVROLET LAZETTI 03/05→

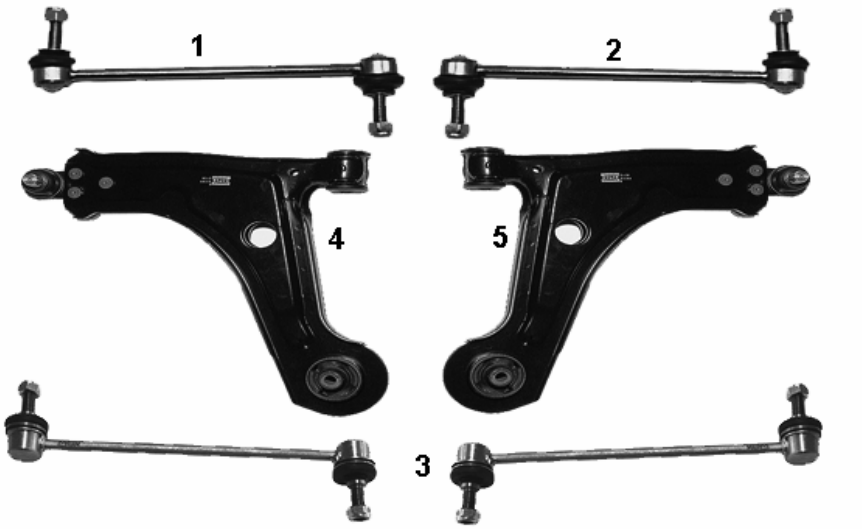


| NR | MAPCO | REF | | | ← | → | ↑ | ↓ | | | NEW | INFO |
|---|---|---|---|---|---|---|---|---|---|---|---|---|
| 1 | 51290 | 96403099 | ✓ | | ✓ | | | | ✓ | ✓ | | |
| 2 | 51291 | 96403100 | ✓ | | | ✓ | | | ✓ | ✓ | | |
| 3 | 51293 | 96561754 | | ✓ | ✓ | ✓ | | | ✓ | ✓ | | |
| 4 | 51294 | 96415063 | ✓ | | ✓ | | | ✓ | ✓ | ✓ | ✓ | |
| 5 | 51295 | 96415064 | ✓ | | | ✓ | | ✓ | ✓ | ✓ | ✓ | |

## CHEVROLET NUBIRA 03/05→

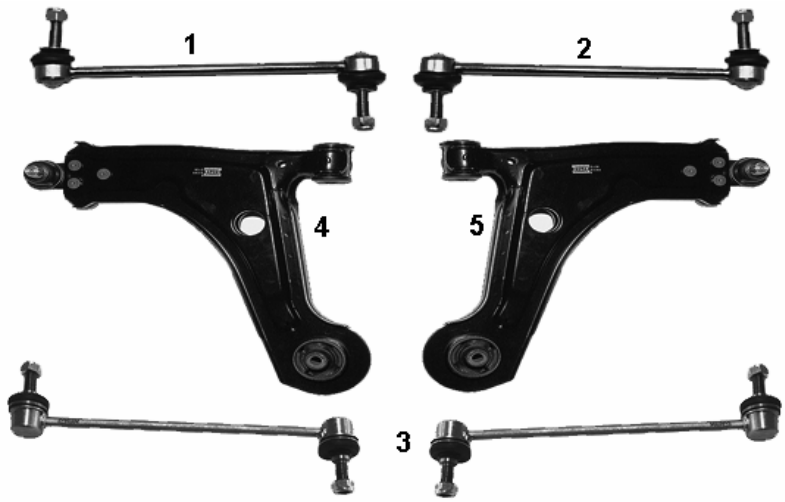


| NR | MAPCO | REF | | | ← | → | ↑ | ↓ | | | NEW | INFO |
|---|---|---|---|---|---|---|---|---|---|---|---|---|
| 1 | 51290 | 96403099 | ✓ | | ✓ | | | | ✓ | ✓ | | |
| 2 | 51291 | 96403100 | ✓ | | | ✓ | | | ✓ | ✓ | | |
| 3 | 51293 | 96561754 | | ✓ | ✓ | ✓ | | | ✓ | ✓ | | |
| 4 | 51294 | 96415063 | ✓ | | ✓ | | | ✓ | ✓ | ✓ | ✓ | |
| 5 | 51295 | 96415064 | ✓ | | | ✓ | | ✓ | ✓ | ✓ | ✓ | |

# CHRYSLER

## CHRYSLER NEON (PL ) 05/94→08/99

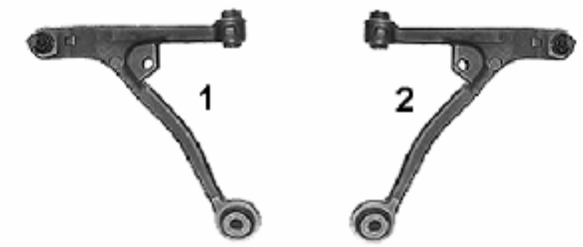


| NR | MAPCO | REF | | | ← | → | ↑ | ↓ | | | NEW | INFO |
|---|---|---|---|---|---|---|---|---|---|---|---|---|
| 1 | 49936 | 4509775 | ✓ | | ✓ | | | | ✓ | ✓ | ✓ | |
| 2 | 49937 | 4509774 | ✓ | | | ✓ | | | ✓ | ✓ | ✓ | |

## CHRYSLER NEON II 1.6 11/01→
## CHRYSLER NEON II 2.0 16V 08/99 →

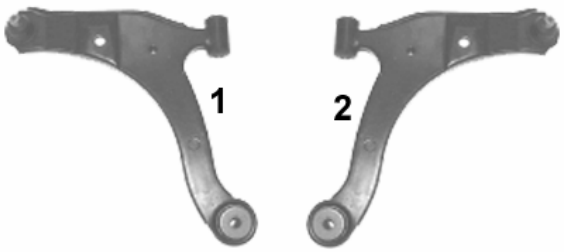


| NR | MAPCO | REF | | | ← | → | ↑ | ↓ | | | NEW | INFO |
|---|---|---|---|---|---|---|---|---|---|---|---|---|
| 1 | 49930 | 5272237AC | ✓ | | ✓ | | | | ✓ | ✓ | | |
| 2 | 49931 | 5272236AC | ✓ | | | ✓ | | | ✓ | ✓ | | |

## CHRYSLER VOYAGER II (GS) 01/95→03/01

| NR | MAPCO | REF | | | ← | → | ↑ | ↓ | | | NEW | INFO |
|---|---|---|---|---|---|---|---|---|---|---|---|---|
| 1 | 49938 | 4743454AA | ✓ | | ✓ | ✓ | | | ✓ | ✓ | ✓ | 1 |

## CHRYSLER VOYAGER III (RG) 02/00→

| NR | MAPCO | REF | | | ← | → | ↑ | ↓ | | | NEW | INFO |
|---|---|---|---|---|---|---|---|---|---|---|---|---|
| 1 | 49938 | 4743454AA | ✓ | | ✓ | ✓ | | | ✓ | ✓ | ✓ | 1 |
| | | | | | | | | | | | | |

# CITROËN

## CITROËN 2CV, AMI, DYANE, ACADIANE, MEHARI 03/63→07/90

| NR | MAPCO | REF | | | ← | → | ↑ | ↓ | | | NEW | INFO |
|---|---|---|---|---|---|---|---|---|---|---|---|---|
| 1 | 19416 | 5451858 | ✓ | | ✓ | ✓ | | | ✓ | ✓ | | |
| | | | | | | | | | | | | |
| | | | | | | | | | | | | |
| | | | | | | | | | | | | |

## CITROËN AX Chassis 4803 -> 01/90→12/98

1

2

3

| NR | MAPCO | REF | | | ← | → | ↑ | ↓ | | | NEW | INFO |
|---|---|---|---|---|---|---|---|---|---|---|---|---|
| 1 | 36402 | | ✓ | | ✓ | ✓ | | | ✓ | ✓ | | |
| 2 | 36404 | | ✓ | | ✓ | ✓ | | | ✓ | ✓ | | |
| 3 | 36405 | | ✓ | | ✓ | ✓ | | | ✓ | ✓ | | |
| | | | | | | | | | | | | |
| | | | | | | | | | | | | |
| | | | | | | | | | | | | |

## CITROËN AX 06/86→12/98

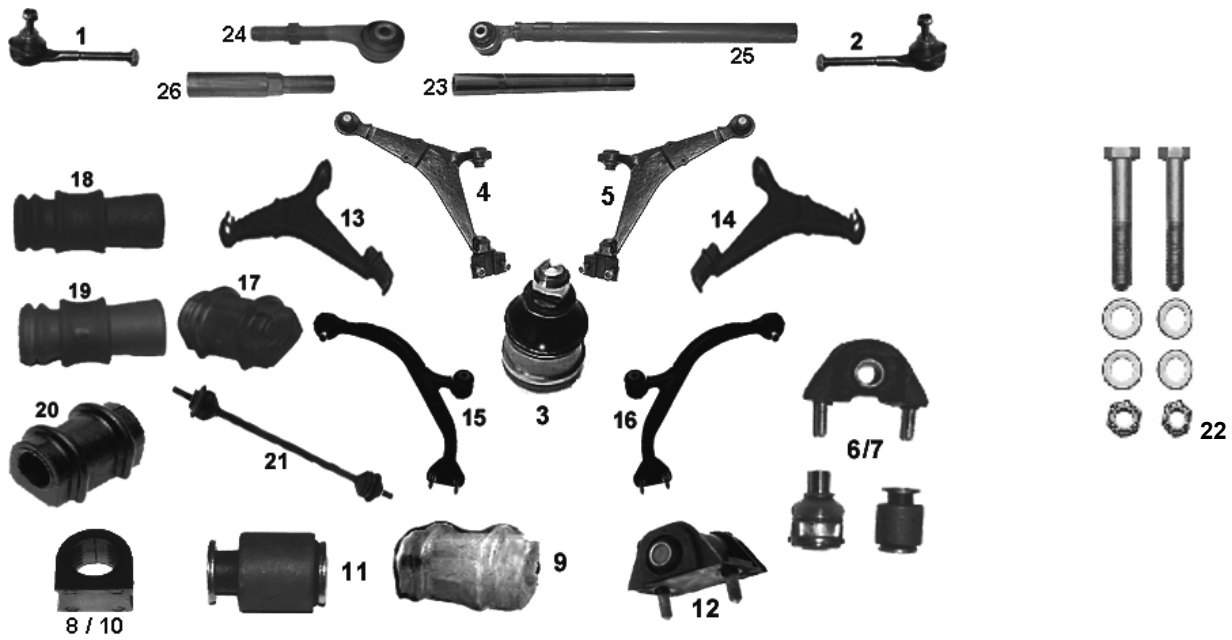


| NR | MAPCO | REF | | | ← | → | ↑ | ↓ | | | NEW | INFO |
|---|---|---|---|---|---|---|---|---|---|---|---|---|
| 1 | 19417 | 9471000565<br>381741 | ✓ | | ✓ | | | | ✓ | ✓ | | M14x1,5RHT |
| 2 | 19418 | 9471000665<br>381742 | ✓ | | | ✓ | | | ✓ | ✓ | | M14x1,5RHT |
| 3 | 19419 | 95603309 | ✓ | | ✓ | ✓ | | | ✓ | ✓ | | (Ø 14 mm) →03/91 |
| 3 | 19428 | 96093233<br>0000364036 | ✓ | | ✓ | ✓ | | | ✓ | ✓ | | (Ø 16 mm) 04/91→ |
| 4 | 19321 | 95658978 | ✓ | | ✓ | | | | ✓ | ✓ | | (Ø 16 mm) 04/91→ |
| 5 | 19322 | 95658979 | ✓ | | | ✓ | | | ✓ | ✓ | | (Ø 16 mm) 04/91→ |
| 6 | 19248 | | ✓ | | ✓ | ✓ | | | ✓ | ✓ | | Kit 04/91→ |
| 7 | 19249 | | ✓ | | ✓ | ✓ | | | ✓ | ✓ | | Kit →03/91 |
| 8 | 33400 | 96064489 | ✓ | | ✓ | ✓ | | | ✓ | ✓ | | (Ø 19 mm) |
| 9 | 33402 | 96064481 | ✓ | | ✓ | ✓ | | | ✓ | ✓ | | |
| 10 | 33409 | 96064491 | ✓ | | ✓ | ✓ | | | ✓ | ✓ | | (Ø 21 mm) |
| 11 | 33414 | 95603308 | ✓ | | ✓ | ✓ | | | ✓ | ✓ | | |
| 12 | 33415 | 96106474 | ✓ | | ✓ | ✓ | | | ✓ | ✓ | | |
| 13 | 19472 | 96133608 | ✓ | | ✓ | | | | ✓ | ✓ | | (Ø 14 mm) →03/91 |
| 14 | 19471 | 96133609 | ✓ | | | ✓ | | | ✓ | ✓ | | (Ø 14 mm) →03/91 |
| 15 | 19360 | 352080 | ✓ | | ✓ | | | | ✓ | ✓ | | 04/91→ |
| 16 | 19361 | 352081 | ✓ | | | ✓ | | | ✓ | ✓ | | 04/91→ |
| 17 | 33323 | 509457 | ✓ | | ✓ | ✓ | | | ✓ | ✓ | | 21mm |
| 18 | 33324 | 509459 | ✓ | | ✓ | ✓ | | | ✓ | ✓ | | 19mm |
| 19 | 33325 | 509460 | ✓ | | ✓ | ✓ | | | ✓ | ✓ | | 20mm |
| 20 | 33420 | 96054481 | ✓ | | ✓ | ✓ | | | ✓ | ✓ | | 19mm |
| 21 | 19476 | 508733 | ✓ | | ✓ | ✓ | | | ✓ | ✓ | | ✓ 1.4Gti 300 mm |
| 22 | 95321 | | ✓ | | ✓ | ✓ | | | ✓ | ✓ | | MS |
| 23 | 19480 | 3812 A0 | ✓ | | ✓ | ✓ | | | ✓ | ✓ | | M14x1,5 |
| 24 | 19481 | 3817 32 | ✓ | | ✓ | | | | | ✓ | | M14x1,5LHT |
| 25 | 19482 | 3817 35 | ✓ | | | ✓ | | | | ✓ | | M14x1,5LHT |
| 26 | 19483 | 3817 34 | ✓ | | ✓ | ✓ | | | | ✓ | | 12,0mm, M14x1,5RHT, L= 132,0mm |

## CITROËN BERLINGO 1.1 → 1.4 BV4 + BV5

07/96→

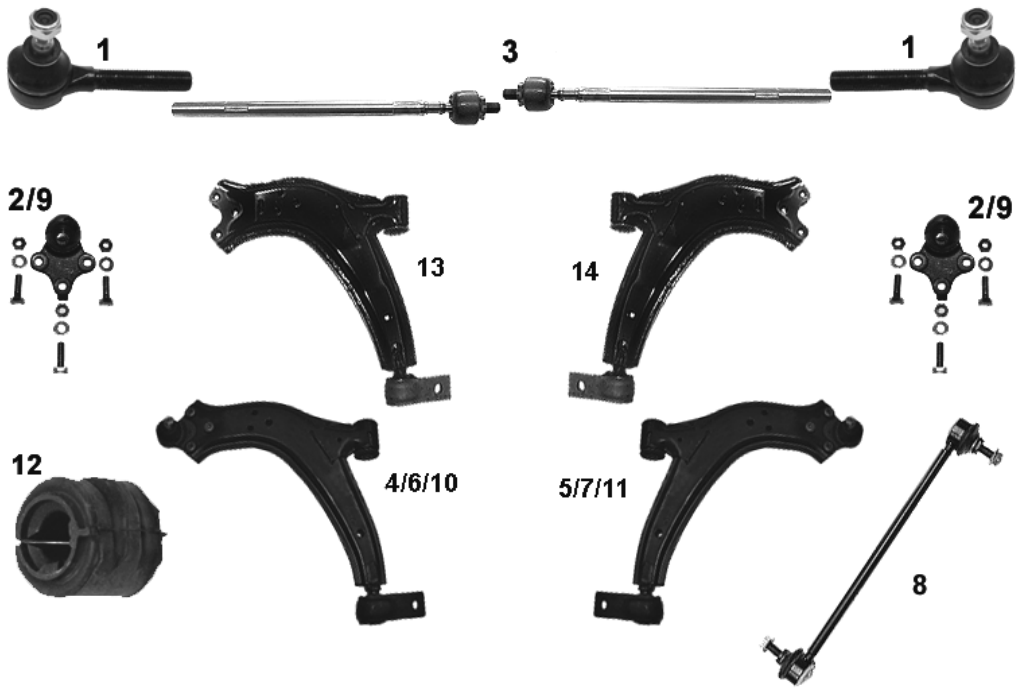


| NR | MAPCO | REF | | | ← | → | ↑ | ↓ | | | NEW | INFO |
|---|---|---|---|---|---|---|---|---|---|---|---|---|
| 1 | 19301 | 381718<br>381750 | ✓ | | ✓ | ✓ | | | ✓ | ✓ | | M14x1,5RHT |
| 2 | 19427 | 364038 | ✓ | | ✓ | ✓ | | | | ✓ | | 16 mm |
| 3 | 19411 | 3812C0 | ✓ | | ✓ | ✓ | | | ✓ | ✓ | | |
| 4 | 19437 | 3520F6 | ✓ | | ✓ | | | | | ✓ | | 16 mm |
| 5 | 19438 | 3521F6 | ✓ | | | ✓ | | | | ✓ | | 16 mm |
| 6 | 19439 | 3520F7 | ✓ | | ✓ | | | | ✓ | | | 16 mm |
| 7 | 19440 | 3521A7 | ✓ | | | ✓ | | | ✓ | | | 16 mm |
| 8 | 19337HPS | 508739 | ✓ | | ✓ | ✓ | | | ✓ | ✓ | | |
| 9 | 19473 | 364051 | ✓ | | ✓ | ✓ | | | ✓ | | | Chassies O 07973→ 18 mm |
| 10 | 19474 | 3520H5 | ✓ | | ✓ | | | | ✓ | ✓ | | 18 mm |
| 11 | 19475 | 3521E5 | ✓ | | | ✓ | | | ✓ | ✓ | | 18 mm |
| 12 | 33424 | 509465 | ✓ | | ✓ | ✓ | | | ✓ | ✓ | | Ø 21 mm |
| 13 | 19474/1 | 3520.E0 | ✓ | | ✓ | | | | ✓ | ✓ | | |
| 14 | 19475/1 | 3521.90 | ✓ | | | ✓ | | | ✓ | ✓ | | |

## CITROËN BERLINGO 1.8 → 2.0HDI 90 07/96→

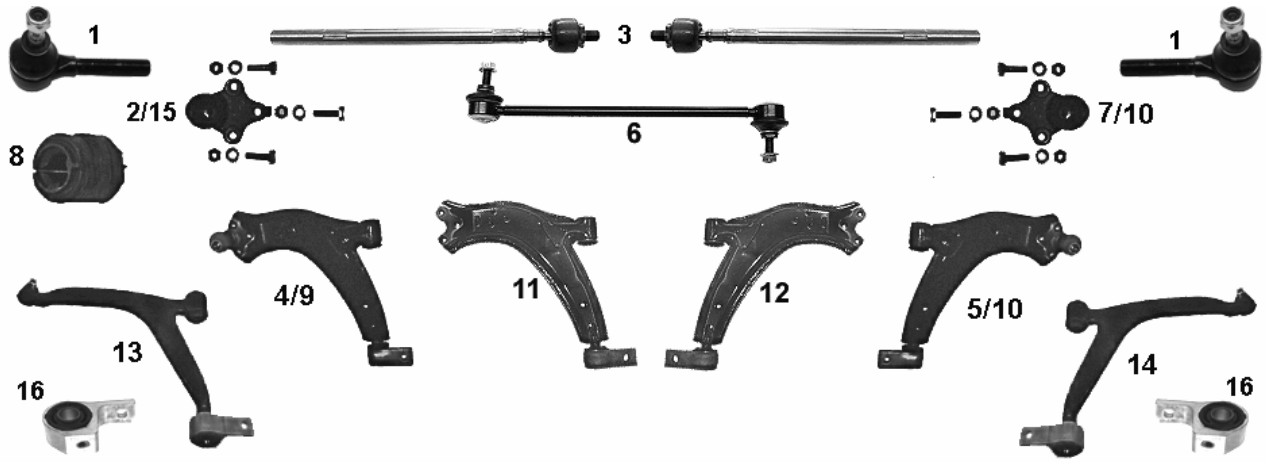


| NR | MAPCO | REF | | | ← | → | ↑ | ↓ | | | NEW | INFO |
|---|---|---|---|---|---|---|---|---|---|---|---|---|
| 1 | 19301 | 381750 | ✓ | | ✓ | ✓ | | | ✓ | ✓ | | M14x1,5RHT |
| 2 | 19427 | 364038 | ✓ | | ✓ | ✓ | | | | ✓ | | 16 mm |
| 3 | 19411 | 3812C0 | ✓ | | ✓ | ✓ | | | ✓ | ✓ | | |
| 4 | 19439 | 3520F7 | ✓ | | ✓ | | | | ✓ | | | 16 mm |
| 5 | 19440 | 3521A7 | ✓ | | | ✓ | | | ✓ | | | 16 mm |
| 6 | 19337HPS | 508739 | ✓ | | ✓ | ✓ | | | ✓ | ✓ | | |
| 7 | 19473 | 364051 | ✓ | | ✓ | ✓ | | | ✓ | | | Chassis O 07973→ 18 mm |
| 8 | 33424 | 509465 | ✓ | | ✓ | ✓ | | | ✓ | ✓ | | Ø 21 mm |
| 9 | 19474 | 3520H5 | ✓ | | ✓ | | | | ✓ | ✓ | | 18 mm |
| 10 | 19475 | 3521E5 | ✓ | | | ✓ | | | ✓ | ✓ | | 18 mm |
| 11 | 19474/1 | 3520.E0 | ✓ | | ✓ | | | | ✓ | ✓ | | |
| 12 | 19475/1 | 3521.90 | ✓ | | | ✓ | | | ✓ | ✓ | | |
| 13 | 19485 | 3520J3 | ✓ | | ✓ | | | | ✓ | ✓ | | ✓ 2.0 HDI 90 12/99→ |
| 14 | 19486 | 3521F3 | ✓ | | | ✓ | | | ✓ | ✓ | | ✓ 2.0 HDI 90 12/99→ |
| 15 | 19389 | 364050 | ✓ | | ✓ | ✓ | | | | ✓ | | Chassis O 7973→,18 mm |
| 16 | 33431 | 352383 | ✓ | | ✓ | ✓ | | | ✓ | ✓ | | ✓ 2.0 HDI 90 12/99→ |

## CITROËN BX 09/82→12/94

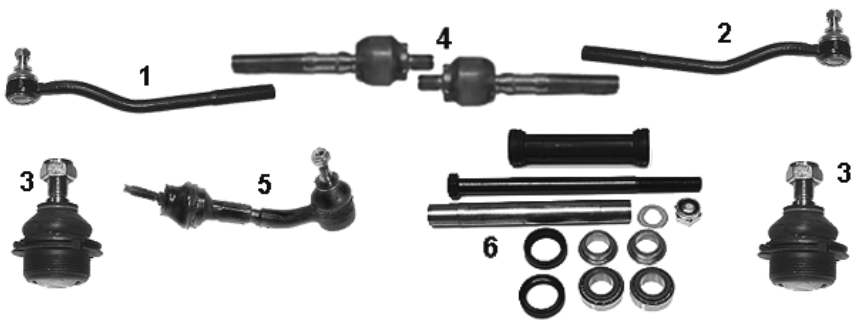


| NR | MAPCO | REF | | | ← | → | ↑ | ↓ | | | NEW | INFO |
|---|---|---|---|---|---|---|---|---|---|---|---|---|
| 1 | 19413 | 95496044 | ✓ | | ✓ | | | | ✓ | ✓ | | M14x1,5RHT |
| 2 | 19414 | 95496045 | ✓ | | | ✓ | | | ✓ | ✓ | | M14x1,5RHT |
| 3 | 19415 | 95494204<br>96041652 | ✓ | | ✓ | ✓ | | | ✓ | ✓ | | |
| 4 | 19412 | 95395440 | ✓ | | ✓ | ✓ | | | ✓ | ✓ | | M14x1,5RHT<br>M12x1,2RHT |
| 5 | 19470 | 95597955 | ✓ | | ✓ | ✓ | | | ✓ | ✓ | | |
| 6 | 34413 | 95619159 | | ✓ | ✓ | ✓ | | | ✓ | ✓ | | HA |

## CITROËN C15 Benzin 05/88→12/97
## CITROËN C15 Diesel 1984→12/97

| NR | MAPCO | REF | | | ← | → | ↑ | ↓ | | | NEW | INFO |
|---|---|---|---|---|---|---|---|---|---|---|---|---|
| 1 | 19301 | 381718<br>381750 | ✓ | | ✓ | ✓ | | | ✓ | ✓ | | M14x1,5RHT |
| 2 | 19310 | 91516336 | ✓ | | ✓ | | | | ✓ | ✓ | | D Chassis 4196→ |
| 3 | 19311 | 91516337 | ✓ | | | ✓ | | | ✓ | ✓ | | D Chassis 4196→ |
| 4 | 19446/1 | 96136394 | ✓ | | ✓ | ✓ | | | ✓ | ✓ | | L= 314mm |
| 5 | 19446 | 95493210<br>381295 | ✓ | | ✓ | ✓ | | | ✓ | ✓ | | **1 + 4** |
| 6 | 34413 | 95619159 | | ✓ | ✓ | ✓ | | | ✓ | ✓ | | HA |
| 7 | 33305 | 352314 | ✓ | | ✓ | ✓ | | | ✓ | ✓ | | |
| 8 | 95310 | | ✓ | | ✓ | ✓ | | | ✓ | ✓ | | MS |

## CITROËN C15 600 Kg 954cc, 1.1+1.4 Chassis 4196→ 05/88→ 07/95
## CITROËN C15 1.8D 600 Kg 11/84→ 07/95

| NR | MAPCO | REF | | | ← | → | ↑ | ↓ | | | NEW | INFO |
|---|---|---|---|---|---|---|---|---|---|---|---|---|
| 1 | 36304 | | ✓ | | ✓ | ✓ | | | ✓ | ✓ | | |

## CITROËN C 25 07/81→03/94

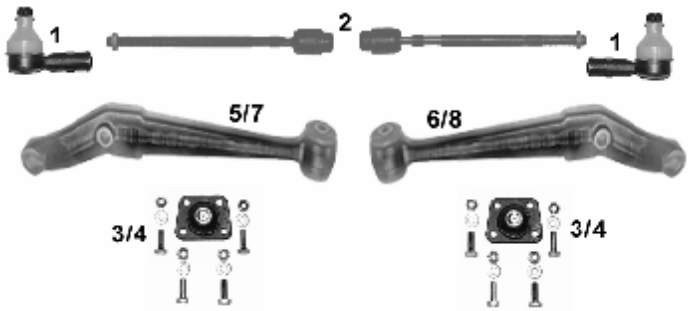


| NR | MAPCO | REF | | | ← | → | ↑ | ↓ | | | NEW | INFO |
|---|---|---|---|---|---|---|---|---|---|---|---|---|
| 1 | 19420 | 9750390080 | ✓ | | ✓ | ✓ | | | ✓ | ✓ | | M16x1,5RHT |
| 2 | 19405 | 364017 | ✓ | | ✓ | | | | | ✓ | | M16x1,5RHT |
| 3 | 19421 | 4388159 | ✓ | | | ✓ | | | ✓ | ✓ | | (Ø 16 mm) →09/85 |
| 4 | 19422 | 364026 | ✓ | | ✓ | ✓ | | | ✓ | ✓ | | (Ø 17 mm) 10/85→ |
| 5 | 19441 | 7576732 | ✓ | | ✓ | | | | ✓ | ✓ | | 10/85→93 (1.0-1.4t) |
| 6 | 19442 | 7576731 | ✓ | | | ✓ | | | ✓ | ✓ | | 10/85→93 (1.0-1.4t) |
| 7 | 19468 | 7567283 | ✓ | | ✓ | | | | ✓ | ✓ | | 10/85→93 (1.8t) |
| 8 | 19469 | 7567282 | ✓ | | | ✓ | | | ✓ | ✓ | | 10/85→93 (1.8t) |

## CITROËN C 1 06/05→

| NR | MAPCO | REF | | | ← | → | ↑ | ↓ | | | NEW | INFO |
|---|---|---|---|---|---|---|---|---|---|---|---|---|
| 1 | 19348HPS | 508745 | ✓ | | ✓ | ✓ | | | ✓ | ✓ | | |

## CITROËN C 2 09/03→

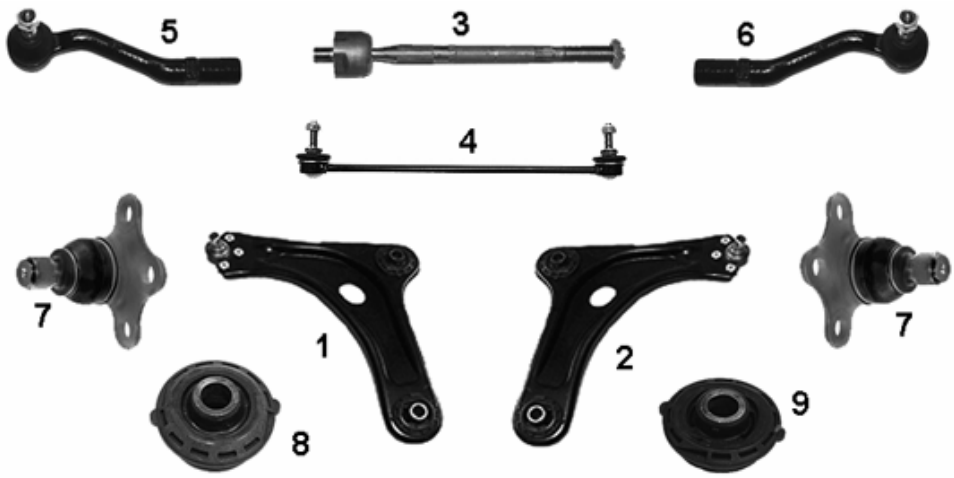


| NR | MAPCO | REF | | | ← | → | ↑ | ↓ | | | NEW | INFO |
|---|---|---|---|---|---|---|---|---|---|---|---|---|
| 1 | 19385 | 3520.L9 | ✓ | | ✓ | | | | ✓ | ✓ | | |
| 2 | 19386 | 3521.J1 | ✓ | | | ✓ | | | ✓ | ✓ | | |
| 3 | 19479 | 3812E1 | ✓ | | ✓ | ✓ | | | ✓ | ✓ | | |
| 4 | 19348HPS | 508745 | ✓ | | ✓ | ✓ | | | ✓ | ✓ | | |
| 5 | 19489 | 3817.55 | ✓ | | ✓ | | | | ✓ | ✓ | | |
| 6 | 19490 | 3817.56 | ✓ | | | ✓ | | | ✓ | ✓ | | |
| 7 | 19491 | 3640.56 | ✓ | | ✓ | ✓ | | | ✓ | ✓ | | |
| 8 | 33334 | 3523AA | ✓ | | ✓ | ✓ | | | ✓ | ✓ | | Ø 55,2mm |
| 9 | 33335 | 352398 | ✓ | | ✓ | ✓ | | | ✓ | ✓ | | Ø 55,5mm |

## CITROËN C 3 — 02/02→

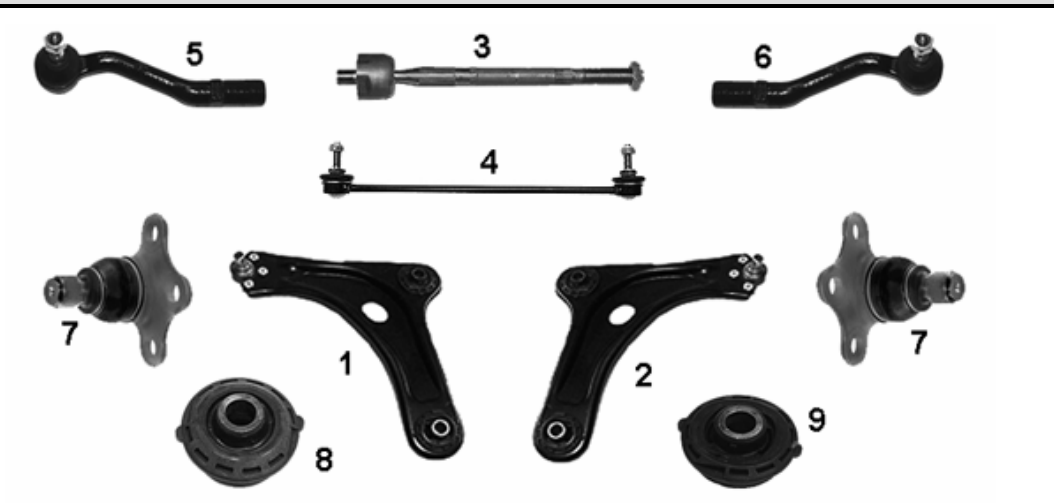


| NR | MAPCO | REF | | | ← | → | ↑ | ↓ | | | NEW | INFO |
|---|---|---|---|---|---|---|---|---|---|---|---|---|
| 1 | 19387 | 3520.L4 | ✓ | | ✓ | | | | ✓ | ✓ | | |
| 2 | 19388 | 3521.H6 | ✓ | | | ✓ | | | ✓ | ✓ | | |
| 3 | 19479 | 3812E1 | ✓ | | ✓ | ✓ | | | ✓ | ✓ | | |
| 4 | 19348HPS | 508745 | ✓ | | ✓ | ✓ | | | ✓ | ✓ | | |
| 5 | 19489 | 3817.55 | ✓ | | ✓ | | | | ✓ | ✓ | | |
| 6 | 19490 | 3817.56 | ✓ | | | ✓ | | | ✓ | ✓ | | |
| 7 | 19491 | 3640.56 | ✓ | | ✓ | ✓ | | | ✓ | ✓ | | |
| 8 | 33334 | 3523AA | ✓ | | ✓ | ✓ | | | ✓ | ✓ | | Ø 55,2mm |
| 9 | 33335 | 352398 | ✓ | | ✓ | ✓ | | | ✓ | ✓ | | Ø 55,5mm |

## CITROËN C 4 — 11/04→

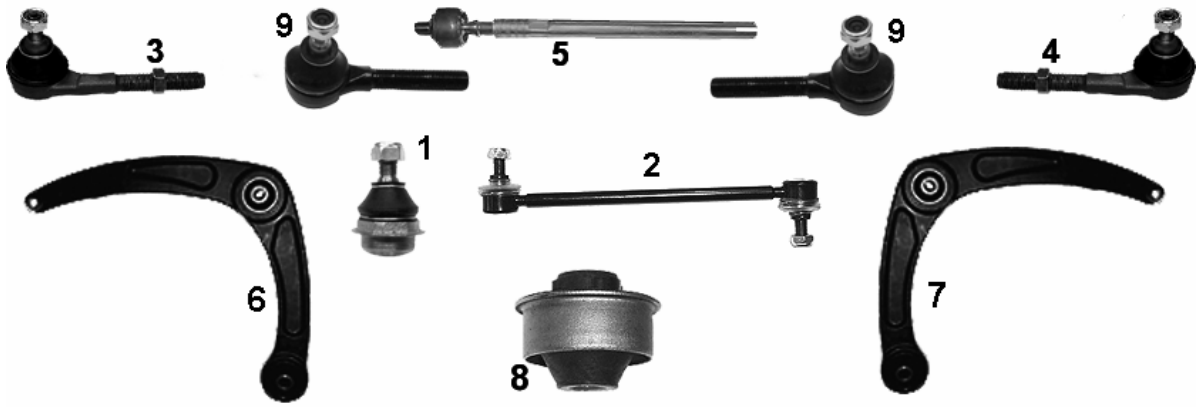


| NR | MAPCO | REF | | | ← | → | ↑ | ↓ | | | NEW | INFO |
|---|---|---|---|---|---|---|---|---|---|---|---|---|
| 1 | 19372 | 3640.60 | ✓ | | ✓ | ✓ | | | ✓ | ✓ | | |
| 2 | 19375HPS | 5087.50 | ✓ | | ✓ | ✓ | | | ✓ | ✓ | | |
| 3 | 19417 | 3817.41 | ✓ | | ✓ | | | | ✓ | ✓ | | →10310 |
| 4 | 19418 | 3817.42 | ✓ | | | ✓ | | | ✓ | ✓ | | →10310 |
| 5 | 19379 | 3812.E0 | ✓ | | ✓ | ✓ | | | ✓ | ✓ | | →10310 |
| 6 | 19383 | 3520.P3 | ✓ | | ✓ | | | | ✓ | ✓ | | 18,0 mm |
| 7 | 19384 | 3521.K3 | ✓ | | | ✓ | | | ✓ | ✓ | | 18,0 mm |
| 8 | 33336 | 3523.92 | ✓ | | ✓ | ✓ | | | ✓ | ✓ | | |
| 9 | 19301 | 3817.50 | ✓ | | ✓ | ✓ | | | ✓ | ✓ | | 10311→ M14x1,5RHT |
| | | | | | | | | | | | | |

## CITROËN C 5 03/01→

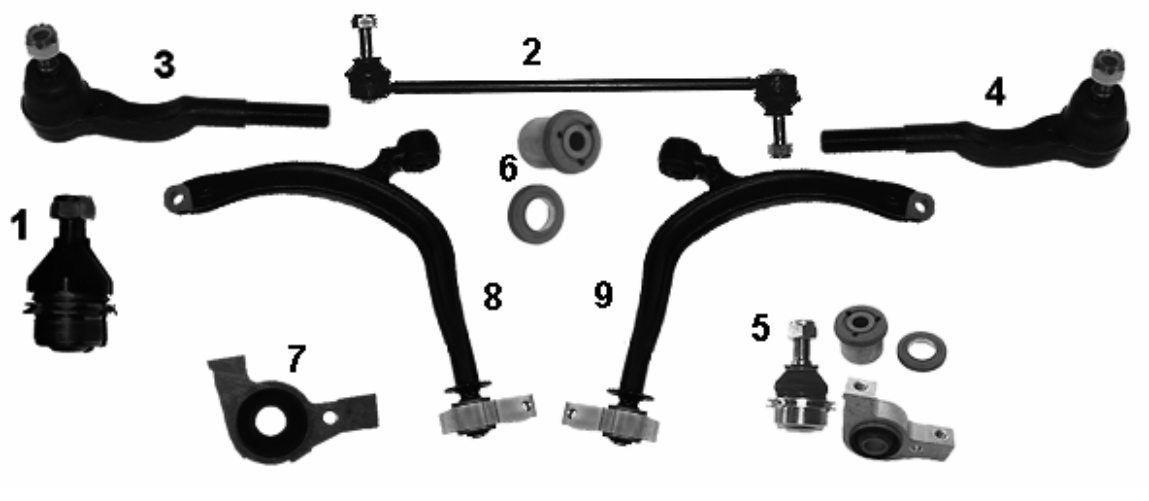


| NR | MAPCO | REF | | | ← | → | ↑ | ↓ | | | NEW | INFO |
|---|---|---|---|---|---|---|---|---|---|---|---|---|
| 1 | 19425 | 364034 | ✓ | | ✓ | ✓ | | | ✓ | ✓ | | |
| 2 | 19362HPS | 508748 | ✓ | | ✓ | ✓ | | | ✓ | ✓ | | |
| 3 | 19477 | 381753 | ✓ | | ✓ | | | | ✓ | ✓ | | M16x1,5RHT |
| 4 | 19478 | 381754 | ✓ | | | ✓ | | | ✓ | ✓ | | M16x1,5RHT |
| 5 | 19245 | | ✓ | | ✓ | ✓ | | | ✓ | ✓ | ✓ | KIT |
| 6 | 33427 | 3523.84 | ✓ | | ✓ | ✓ | | | ✓ | ✓ | ✓ | |
| 7 | 33428 | 3523.95 | ✓ | | ✓ | ✓ | | | ✓ | ✓ | | |
| 8 | 19390 | 3520.K3 | ✓ | | ✓ | | | | ✓ | ✓ | | |
| 9 | 19391 | 3521.G3 | ✓ | | | ✓ | | | ✓ | ✓ | | |
| | | | | | | | | | | | | |
| | | | | | | | | | | | | |
| | | | | | | | | | | | | |

## CITROËN C 8 07/02→

| NR | MAPCO | REF | | | ← | → | ↑ | ↓ | | | NEW | INFO |
|---|---|---|---|---|---|---|---|---|---|---|---|---|
| 1 | 19492 | 405912 | ✓ | | ✓ | ✓ | | | ✓ | ✓ | | M14x1,5 |
| 2 | 19376HPS | 508751 | ✓ | | ✓ | ✓ | | | ✓ | ✓ | | |
| 3 | 33017 | 1312317080 | ✓ | | ✓ | ✓ | | | ✓ | ✓ | | |
| 4 | 49082 | 3521H0 | ✓ | | ✓ | | | | ✓ | ✓ | ✓ | |
| 5 | 49083 | 3521H1 | ✓ | | | ✓ | | | ✓ | ✓ | ✓ | |

## CITROËN EVASION 2.0 + EVASION D + TD 06/94→07/02
## CITROËN JUMPY 06/94→

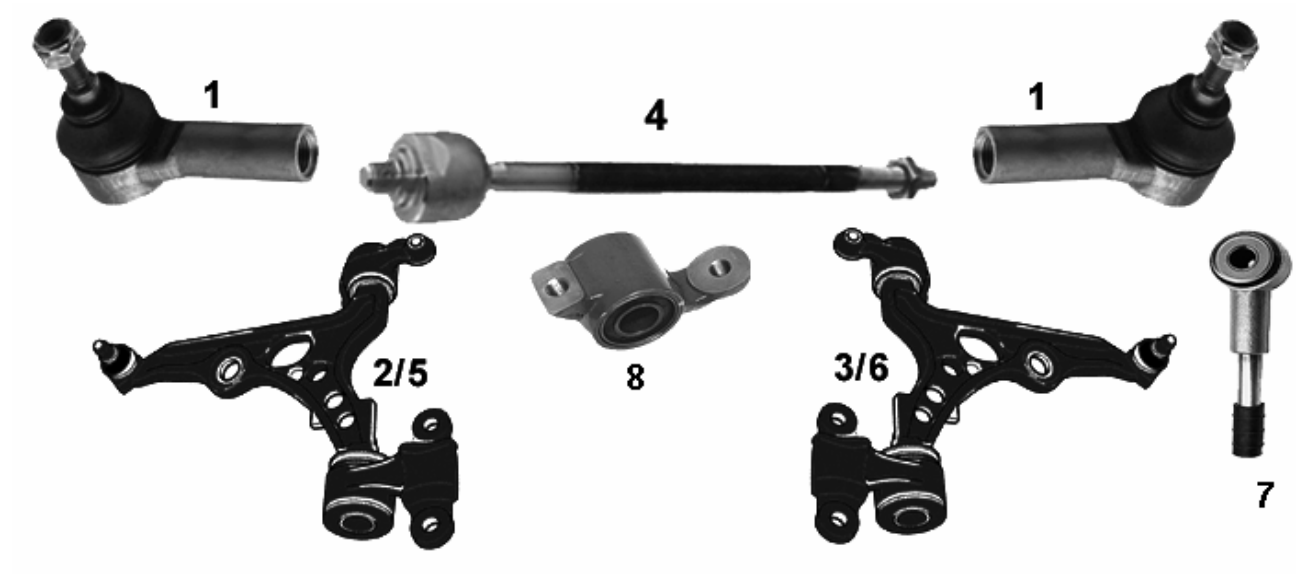


| NR | MAPCO | REF | | | ← | → | ↑ | ↓ | | | NEW | INFO |
|---|---|---|---|---|---|---|---|---|---|---|---|---|
| 1 | **19430** | 9404059080 | ✓ | | ✓ | ✓ | | | ✓ | ✓ | | M14x1,5RHT |
| 2 | **19431** | 3520P8 | ✓ | | ✓ | | | | ✓ | ✓ | | Chassis 6944→ |
| 3 | **19432** | 3521L0 | ✓ | | | ✓ | | | ✓ | ✓ | | Chassis 6944→ |
| 4 | **19023** | 3812A4 | ✓ | | ✓ | ✓ | | | ✓ | ✓ | | M14x1,5RHT |
| 5 | **19433** | 93500972 | ✓ | | ✓ | | | | ✓ | ✓ | | ✓ 2.1 TD |
| 6 | **19434** | 93500973 | ✓ | | | ✓ | | | ✓ | ✓ | | ✓ 2.1 TD |
| 7 | **19363** | 508735 | ✓ | | ✓ | ✓ | | | ✓ | ✓ | | |
| 8 | **33017** | 1312317080 | ✓ | | ✓ | ✓ | | | ✓ | ✓ | | |

## CITROËN JUMPER (230_) 02/94→04/02

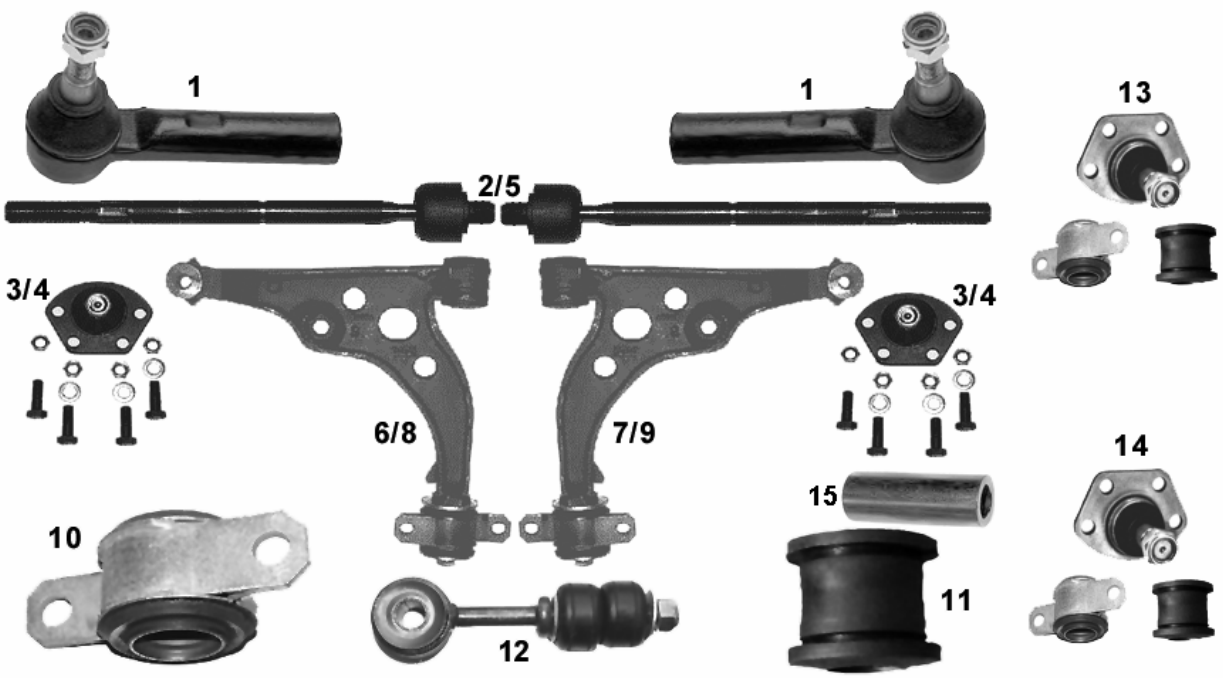


| NR | MAPCO | REF | | | ← | → | ↑ | ↓ | | | NEW | INFO |
|---|---|---|---|---|---|---|---|---|---|---|---|---|
| 1 | 19447 | 4018A3 | ✓ | | ✓ | ✓ | | | ✓ | ✓ | | M16x1,5RHT L=120,0mm |
| 2 | 19448 | 14716544080 | ✓ | | ✓ | ✓ | | | | ✓ | | |
| 3 | 19449 | 364032 | ✓ | | ✓ | ✓ | | | ✓ | ✓ | | ✓ (1.0t-1.4t) |
| 4 | 19450 | 364033 | ✓ | | ✓ | ✓ | | | ✓ | ✓ | | ✓ (1.8t) |
| 5 | 19458 | 400624 | ✓ | | ✓ | ✓ | | | ✓ | | | M16 x 1,5 |
| 6 | 19461 | 352095 | ✓ | | ✓ | | | | ✓ | ✓ | | ✓ (1.0t-1.4t) |
| 7 | 19462 | 352165 | ✓ | | | ✓ | | | ✓ | ✓ | | ✓ (1.0t-1.4t) |
| 8 | 19463 | 352096 | ✓ | | ✓ | | | | ✓ | ✓ | | ✓ (1.8t) |
| 9 | 19464 | 352166 | ✓ | | | ✓ | | | ✓ | ✓ | | ✓ (1.8t) |
| 10 | 33001 | 352394 | ✓ | | ✓ | ✓ | | | ✓ | ✓ | | |
| 11 | 33006 | 352393 | ✓ | | ✓ | ✓ | | | ✓ | ✓ | | |
| 15 | 33006/1 | 352505 | ✓ | | ✓ | ✓ | | | ✓ | ✓ | | Hülse |
| 12 | 19366 | 508737 | ✓ | | ✓ | ✓ | | | ✓ | ✓ | | |
| 13 | 19251 | | ✓ | | ✓ | ✓ | | | ✓ | ✓ | | Kit ✓ (1.0t-1.4t) |
| 14 | 19250 | | ✓ | | ✓ | ✓ | | | ✓ | ✓ | | Kit ✓ (1.8t) |

## CITROËN JUMPER (244_) 04/02→

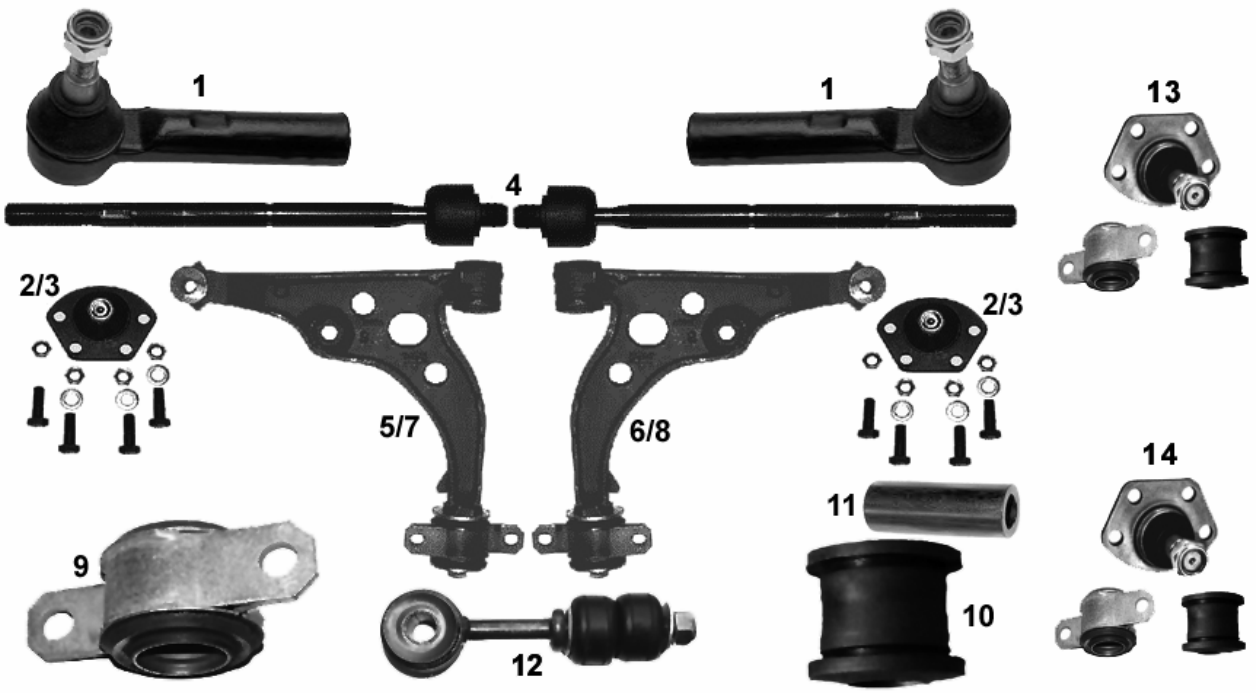


| NR | MAPCO | REF | | | ← | → | ↑ | ↓ | | | NEW | INFO |
|---|---|---|---|---|---|---|---|---|---|---|---|---|
| 1 | 19447 | 4018A3 | ✓ | | ✓ | ✓ | | | ✓ | ✓ | | →12/2002 M16x1,5RHT L=120,0mm |
| 2 | 19449 | 364032 | ✓ | | ✓ | ✓ | | | ✓ | ✓ | | ✓ (1.0t-1.4t) |
| 3 | 19450 | 364033 | ✓ | | ✓ | ✓ | | | ✓ | ✓ | | ✓ (1.8t) |
| 4 | 19458 | 400624 | ✓ | | ✓ | ✓ | | | ✓ | | | M16 x 1,5 |
| 5 | 49084 | 3520N3 | ✓ | | ✓ | | | | ✓ | ✓ | ✓ | ✓ (1.0t-1.4t) |
| 6 | 49085 | 3521J3 | ✓ | | | ✓ | | | ✓ | ✓ | ✓ | ✓ (1.0t-1.4t) |
| 7 | 49086 | 3520L0 | ✓ | | ✓ | | | | ✓ | ✓ | ✓ | ✓ (1.8t) |
| 8 | 49087 | 3521H3 | ✓ | | | ✓ | | | ✓ | ✓ | ✓ | ✓ (1.8t) |
| 9 | 33001 | 352394 | ✓ | | ✓ | ✓ | | | ✓ | ✓ | | |
| 10 | 33006 | 352393 | ✓ | | ✓ | ✓ | | | ✓ | ✓ | | |
| 11 | 33006/1 | 352505 | ✓ | | ✓ | ✓ | | | ✓ | ✓ | | Hülse |
| 12 | 19366 | 508737 | ✓ | | ✓ | ✓ | | | ✓ | ✓ | | |
| 13 | 19251 | | ✓ | | ✓ | ✓ | | | ✓ | ✓ | | Kit ✓ (1.0t-1.4t) |
| 14 | 19250 | | ✓ | | ✓ | ✓ | | | ✓ | ✓ | | Kit ✓ (1.8t) |

## CITROËN SAXO 05/96→

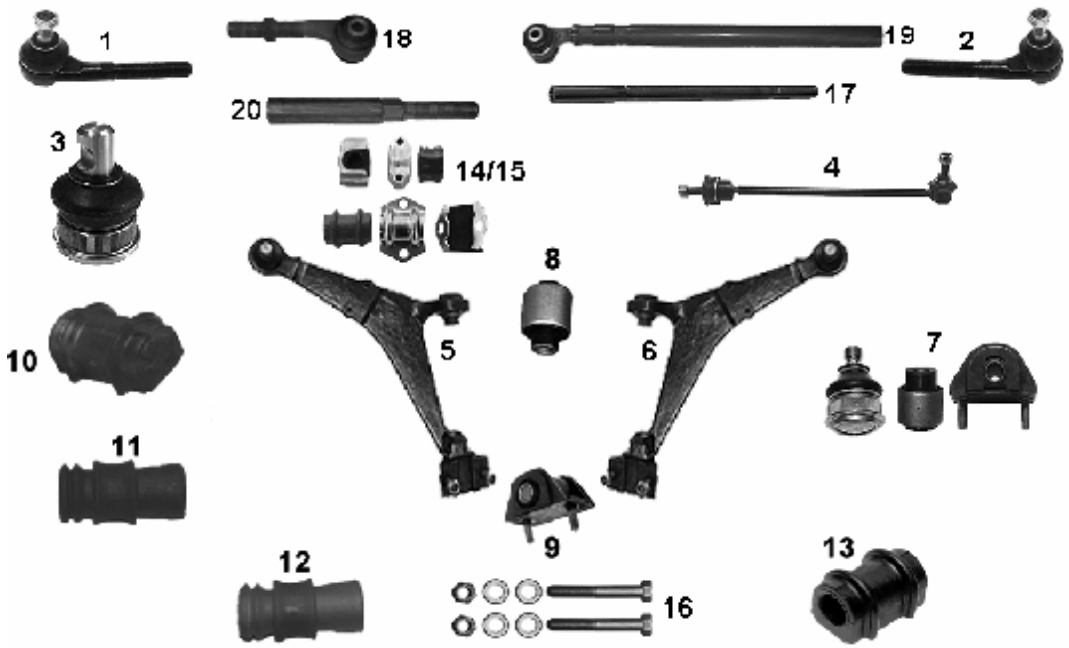


| NR | MAPCO | REF | | | ← | → | ↑ | ↓ | | | NEW | INFO |
|---|---|---|---|---|---|---|---|---|---|---|---|---|
| 1 | 19417 | 381741 | ✓ | | ✓ | | | | ✓ | ✓ | | M14x1,5RHT |
| 2 | 19418 | 381742 | ✓ | | | ✓ | | | ✓ | ✓ | | M14x1,5RHT |
| 3 | 19428 | 96093233 | ✓ | | ✓ | ✓ | | | ✓ | ✓ | | (Ø 16 mm) |
| 4 | 19338HPS | 508740 | ✓ | | ✓ | ✓ | | | ✓ | ✓ | | |
| 5 | 19321 | 95658978 | ✓ | | ✓ | | | | ✓ | ✓ | | |
| 6 | 19322 | 95658979 | ✓ | | | ✓ | | | ✓ | ✓ | | |
| 7 | 19248 | | ✓ | | ✓ | ✓ | | | ✓ | ✓ | | Kit |
| 8 | 33414 | 95603308 | ✓ | | ✓ | ✓ | | | ✓ | ✓ | | |
| 9 | 33415 | 96106474 | ✓ | | ✓ | ✓ | | | ✓ | ✓ | | |
| 10 | 33323 | 509457 | ✓ | | ✓ | ✓ | | | ✓ | ✓ | | 21mm |
| 11 | 33324 | 509459 | ✓ | | ✓ | ✓ | | | ✓ | ✓ | | 19mm |
| 12 | 33325 | 509460 | ✓ | | ✓ | ✓ | | | ✓ | ✓ | | 20mm |
| 13 | 33420 | 96054481 | ✓ | | ✓ | ✓ | | | ✓ | ✓ | | 19mm |
| 14 | 36402 | | ✓ | | ✓ | ✓ | | | ✓ | ✓ | | |
| 15 | 36404 | | ✓ | | ✓ | ✓ | | | ✓ | ✓ | | |
| 16 | 95321 | | ✓ | | ✓ | ✓ | | | ✓ | ✓ | | MS |
| 17 | 19480 | 3812 A0 | ✓ | | ✓ | ✓ | | | ✓ | ✓ | | M14x1,5 |
| 18 | 19481 | 3817 32 | ✓ | | ✓ | | | | | ✓ | | M14x1,5LHT |
| 19 | 19482 | 3817 35 | ✓ | | | ✓ | | | | ✓ | | M14x1,5LHT |
| 20 | 19483 | 3817 34 | ✓ | | ✓ | ✓ | | | | ✓ | | 12,0mm, M14x1,5RHT, L= 132,0mm |

## CITROËN VISA 1.7D 03/84→ 06/89

| NR | MAPCO | REF | | | ← | → | ↑ | ↓ | | | NEW | INFO |
|---|---|---|---|---|---|---|---|---|---|---|---|---|
| 1 | 36403 | | ✓ | | ✓ | ✓ | | | ✓ | ✓ | | |

## CITROËN XANTIA X1, X2 03/93→

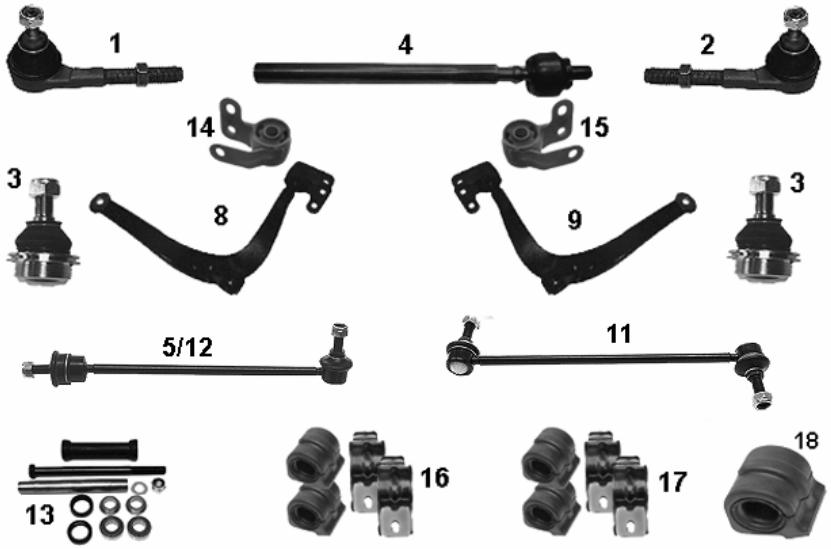


| NR | MAPCO | REF | | | ← | → | ↑ | ↓ | | | NEW | INFO |
|---|---|---|---|---|---|---|---|---|---|---|---|---|
| 1 | 19417 | 381741 | ✓ | | ✓ | | | | ✓ | ✓ | | M14x1,5RHT |
| 2 | 19418 | 381742 | ✓ | | | ✓ | | | ✓ | ✓ | | M14x1,5RHT |
| 3 | 19425 | 364034 | ✓ | | ✓ | ✓ | | | ✓ | ✓ | | |
| 4 | 19410 | 96136394 | ✓ | | ✓ | ✓ | | | ✓ | ✓ | | M14x1,5 RHT L= 314 mm |
| 5 | 19429HPS | 96145457 | ✓ | | ✓ | ✓ | | | ✓ | ✓ | | Chassis →6614 |
| 6 | 19444 | | ✓ | | ✓ | | | | ✓ | ✓ | | **1+4** |
| 7 | 19445 | | ✓ | | | ✓ | | | ✓ | ✓ | | **2+4** |
| 8 | 19453 | 3520C1 | ✓ | | ✓ | | | | ✓ | ✓ | | |
| 9 | 19454 | 352181 | ✓ | | | ✓ | | | ✓ | ✓ | | |
| 11 | 19362HPS | 508748 | ✓ | | ✓ | ✓ | | | ✓ | ✓ | | Chassis 8851→ |
| 12 | 19338HPS | 508740 | ✓ | | ✓ | ✓ | | | ✓ | ✓ | | Chassis 6615→8850 |
| 13 | 34413 | 95619159 | | ✓ | ✓ | ✓ | | | ✓ | ✓ | | **Rep.- satz** |
| 14 | 33425 | 352381 | ✓ | | ✓ | | | ✓ | ✓ | ✓ | | |
| 15 | 33426 | 352382 | ✓ | | | ✓ | | ✓ | ✓ | ✓ | | |
| 16 | 36406 | | ✓ | | ✓ | ✓ | | | ✓ | ✓ | | |
| 17 | 36407 | | ✓ | | ✓ | ✓ | | | ✓ | ✓ | | |
| 18 | 33403 | 96089104 | ✓ | | ✓ | ✓ | | | ✓ | ✓ | ✓ | Ø 22mm |

## CITROËN XM 03/89→10/00

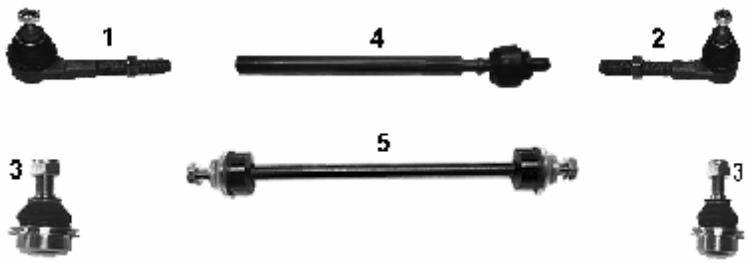


| NR | MAPCO | REF | | | ← | → | ↑ | ↓ | | | NEW | INFO |
|---|---|---|---|---|---|---|---|---|---|---|---|---|
| 1 | 19417 | 381741 | ✓ | | ✓ | | | | ✓ | ✓ | | M14x1,5RHT |
| 2 | 19418 | 381742 | ✓ | | | ✓ | | | ✓ | ✓ | | M14x1,5RHT |
| 3 | 19425 | 364034 | ✓ | | ✓ | ✓ | | | ✓ | ✓ | | |
| 4 | 19409 | 96032460 | ✓ | | ✓ | ✓ | | | ✓ | ✓ | | M14x1,5 RHT |
| 5 | 19451HPS | 508741 | ✓ | | ✓ | ✓ | | | ✓ | ✓ | | |

## CITROËN XSARA 04/97→ 08/05

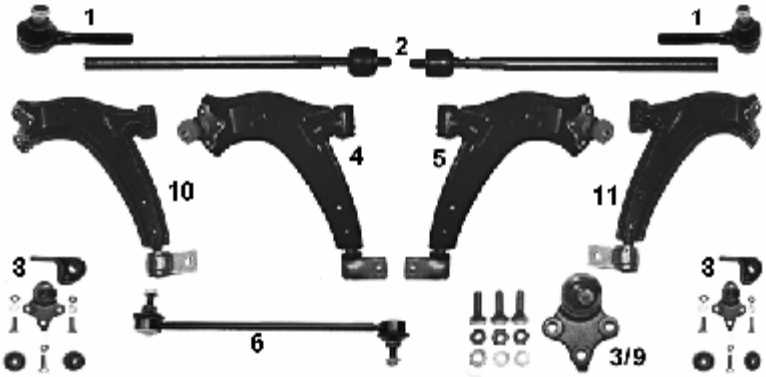


| NR | MAPCO | REF | | | ← | → | ↑ | ↓ | | | NEW | INFO |
|---|---|---|---|---|---|---|---|---|---|---|---|---|
| 1 | 19301 | 381750 | ✓ | | ✓ | ✓ | | | ✓ | ✓ | | M14x1,5RHT |
| 2 | 19411 | 3812C0 | ✓ | | ✓ | ✓ | | | ✓ | ✓ | | |
| 3 | 19427 | 364038 | ✓ | | ✓ | ✓ | | | ✓ | | | 16mm |
| 4 | 19459 | 3520G5 | ✓ | | ✓ | | | | ✓ | | | |
| 5 | 19460 | 3521C5 | ✓ | | | ✓ | | | ✓ | | | |
| 6 | 19337HPS | 508739 | ✓ | | ✓ | ✓ | | | ✓ | ✓ | | |
| 7 | 19443 | | ✓ | | ✓ | ✓ | | | ✓ | ✓ | | **1 + 2** |
| 8 | 19247 | | ✓ | | ✓ | ✓ | | | ✓ | ✓ | | Kit |
| 9 | 19473 | 364051 | ✓ | | ✓ | ✓ | | | ✓ | | | 18 mm |
| 10 | 19474/1 | 3520.E0 | ✓ | | ✓ | | | | ✓ | ✓ | | |
| 11 | 19475/1 | 3521.90 | ✓ | | | ✓ | | | ✓ | ✓ | | |

## CITROËN XSARA PICASSO (N68) 06/00→

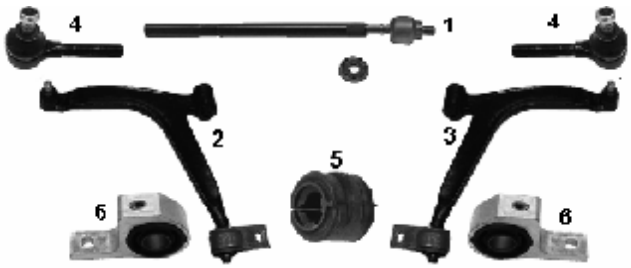


| NR | MAPCO | REF | | | ← | → | ↑ | ↓ | | | NEW | INFO |
|---|---|---|---|---|---|---|---|---|---|---|---|---|
| 1 | 19484 | 3812C6 | ✓ | | ✓ | ✓ | | | ✓ | ✓ | | L= 320 mm M14x1,5RHT |
| 2 | 19485 | 3520J3 | ✓ | | ✓ | | | | ✓ | ✓ | | ✓1.6/1.8/2.0 |
| 3 | 19486 | 3521F3 | ✓ | | | ✓ | | | ✓ | ✓ | | ✓1.6/1.8/2.0 |
| 4 | 19301 | 381750 | ✓ | | ✓ | ✓ | | | ✓ | ✓ | | M14x1,5RHT |
| 5 | 33424 | 509465 | ✓ | | ✓ | ✓ | | | ✓ | ✓ | | Ø 21mm |
| 6 | 33431 | 352383 | ✓ | | ✓ | ✓ | | | ✓ | ✓ | ✓ | |

## CITROËN ZX STOP 2.0i 16V 08/91→ 06/97

| NR | MAPCO | REF | | | ← | → | ↑ | ↓ | | | NEW | INFO |
|---|---|---|---|---|---|---|---|---|---|---|---|---|
| 1 | 36406 | | ✓ | | ✓ | ✓ | | | ✓ | ✓ | | |
| 2 | 36400 | | ✓ | | ✓ | ✓ | | | ✓ | ✓ | | |
| 3 | 36401 | | ✓ | | ✓ | ✓ | | | ✓ | ✓ | | |

## CITROËN ZX 01/91→ 06/97

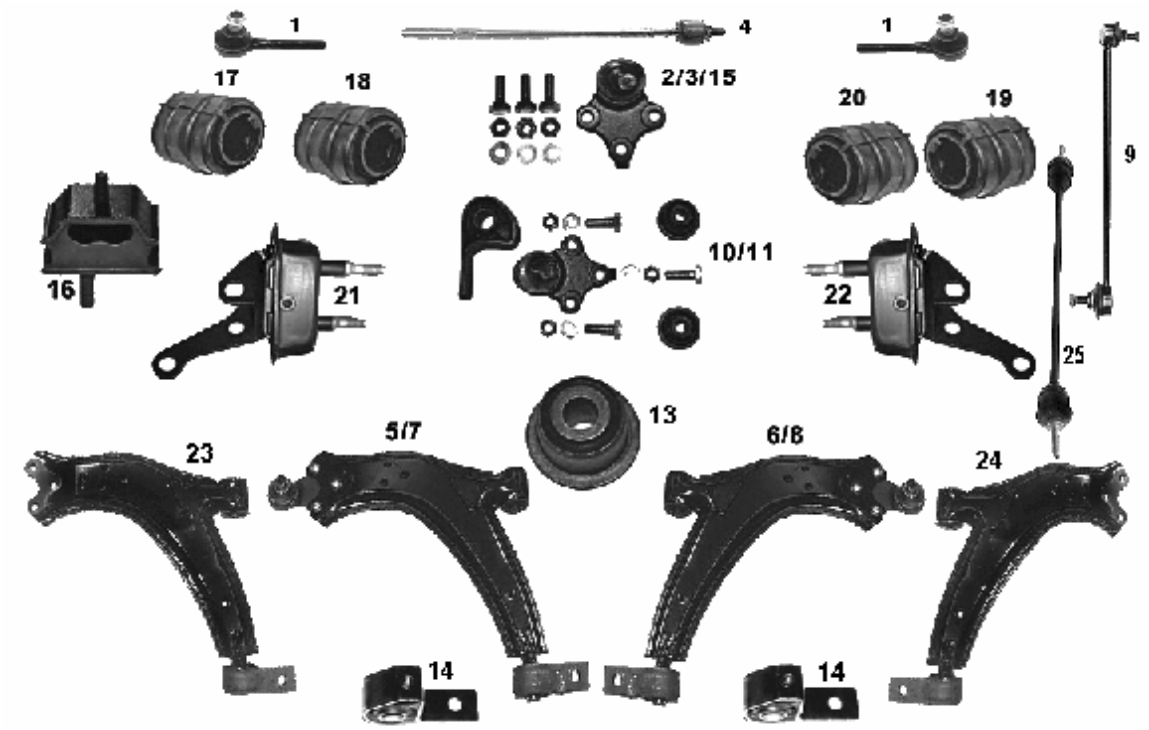


| NR | MAPCO | REF | | | ← | → | ↑ | ↓ | | | NEW | INFO |
|---|---|---|---|---|---|---|---|---|---|---|---|---|
| 1 | 19301 | 381750 | ✓ | | ✓ | ✓ | | | ✓ | ✓ | | M14x1,5RHT |
| 2 | 19426 | 364039 | ✓ | | ✓ | ✓ | | | | ✓ | | |
| 3 | 19427 | 364038 | ✓ | | ✓ | ✓ | | | ✓ | | | Chassies →O 07972 16mm |
| 4 | 19411 | 3812C0 | ✓ | | ✓ | ✓ | | | ✓ | ✓ | | M14x1,5RHT |
| 5 | 19437 | 3520A1 | ✓ | | ✓ | | | | | ✓ | | |
| 6 | 19438 | 3521A6 | ✓ | | | ✓ | | | | ✓ | | |
| 7 | 19439 | 3520F7 | ✓ | | ✓ | | | | ✓ | | | |
| 8 | 19440 | 3521A7 | ✓ | | | ✓ | | | ✓ | | | |
| 9 | 19337HPS | 508734 | ✓ | | ✓ | ✓ | | | ✓ | ✓ | | |
| 10 | 19246 | | ✓ | | ✓ | ✓ | | | | ✓ | | Kit |
| 11 | 19247 | | ✓ | | ✓ | ✓ | | | ✓ | | | Kit |
| 12 | 19443 | | ✓ | | ✓ | ✓ | | | ✓ | ✓ | | **1 + 4** |
| 13 | 33416 | 352362 | ✓ | | ✓ | ✓ | | | ✓ | ✓ | | |
| 14 | 33417 | 352375 | ✓ | | ✓ | ✓ | | | ✓ | ✓ | | |
| 15 | 19473 | 364051 | ✓ | | ✓ | ✓ | | | ✓ | ✓ | | Chassies O 07973→ 18 mm |
| 16 | 33321 | 513171 | | ✓ | ✓ | ✓ | | | ✓ | ✓ | | |
| 17 | 33421 | 96158745 | ✓ | | ✓ | ✓ | | | ✓ | ✓ | | (Ø 18 mm) |
| 18 | 33422 | 509466 | ✓ | | ✓ | ✓ | | | ✓ | ✓ | | (Ø 19 mm) |
| 19 | 33423 | 96051398 | ✓ | | ✓ | ✓ | | | ✓ | ✓ | | (Ø 24 mm) |
| 20 | 33424 | 509465 | ✓ | | ✓ | ✓ | | | ✓ | ✓ | | (Ø 21 mm) |
| 21 | 33329 | 513169 | | ✓ | ✓ | | | | ✓ | ✓ | | |
| 22 | 33330 | 513170 | | ✓ | | ✓ | | | ✓ | ✓ | | |
| 23 | 19474/1 | 3520.E0 | ✓ | | ✓ | | | | ✓ | ✓ | | |
| 24 | 19475/1 | 3521.90 | ✓ | | | ✓ | | | ✓ | ✓ | | |
| 25 | 19435 | 96111480 | ✓ | | ✓ | ✓ | | | ✓ | ✓ | ✓ | ✓ 1.9i Chassies →O 065683 |

# DACIA

## DACIA LOGAN 09/04→

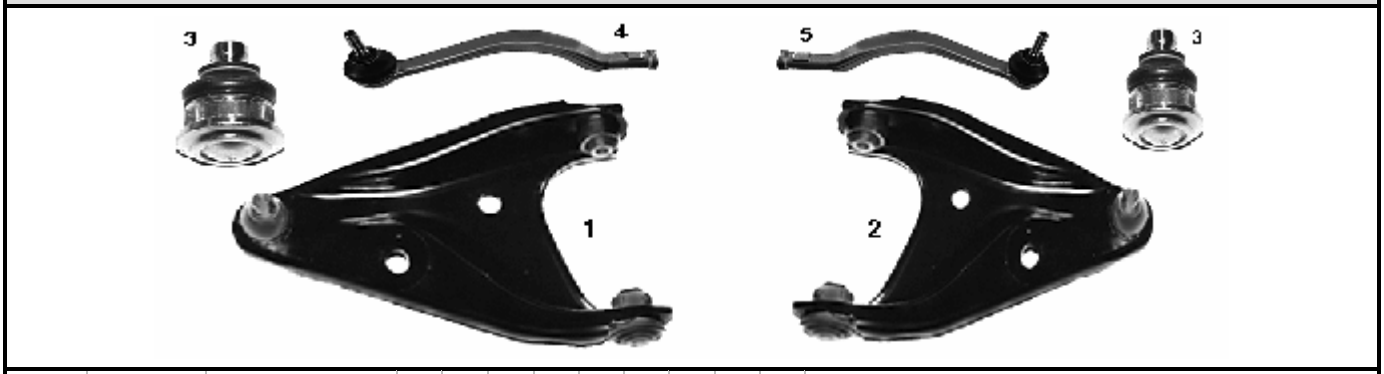


| NR | MAPCO | REF | | | ← | → | ↑ | ↓ | | | NEW | INFO |
|---|---|---|---|---|---|---|---|---|---|---|---|---|
| 1 | **49190** | 8200216376 | ✓ | | ✓ | | | ✓ | ✓ | ✓ | ✓ | |
| 2 | **49191** | 8200216377 | ✓ | | | ✓ | | ✓ | ✓ | ✓ | ✓ | |
| 3 | **49151** | 6001547519 | ✓ | | ✓ | ✓ | | | ✓ | ✓ | | Ø = 18mm |
| 4 | **49192** | 6001547610 | ✓ | | ✓ | | | ✓ | ✓ | ✓ | ✓ | |
| 5 | **49193** | 6001547611 | ✓ | | | ✓ | | ✓ | ✓ | ✓ | ✓ | |
| | | | | | | | | | | | | |
| | | | | | | | | | | | | |
| | | | | | | | | | | | | |
| | | | | | | | | | | | | |

# DAEWOO

## DAEWOO ESPERO (KLEJ) 1991→1999

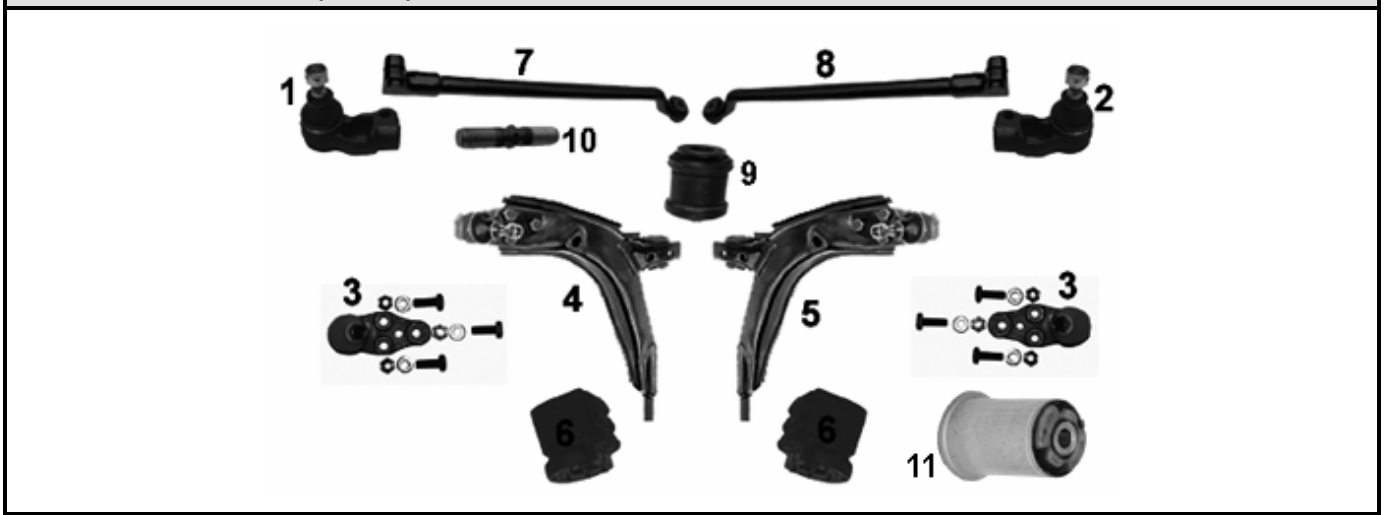


| NR | MAPCO | REF | | | ← | → | ↑ | ↓ | | | NEW | INFO |
|---|---|---|---|---|---|---|---|---|---|---|---|---|
| 1 | **19718** | 26001807 | ✓ | | ✓ | | | | ✓ | ✓ | | M16x1,5RHT |
| 2 | **19719** | 26001806 | ✓ | | | ✓ | | | ✓ | ✓ | | M16x1,5RHT |
| 3 | **19714** | 94788122 | ✓ | | ✓ | ✓ | | | ✓ | ✓ | | |
| 4 | **49756** | 96218397 | ✓ | | ✓ | | | | ✓ | ✓ | | |
| 5 | **49757** | 96218398 | ✓ | | | ✓ | | | ✓ | ✓ | | |
| 6 | **33757** | 352335 | ✓ | | ✓ | ✓ | | | ✓ | ✓ | | |
| 7 | **59295** | 07848281 | ✓ | | ✓ | | | | ✓ | ✓ | | |
| 8 | **59296** | 07848282 | ✓ | | | ✓ | | | ✓ | ✓ | | |
| 9 | **33752** | 96185973 | ✓ | | ✓ | ✓ | | | ✓ | ✓ | | |
| 10 | **59367** | 7846696 | ✓ | | ✓ | ✓ | | | ✓ | ✓ | | L=98,5mm M16x1,5 |
| 11 | **33785** | 90189050 | | ✓ | ✓ | ✓ | | | ✓ | ✓ | ✓ | Ø 48,0mm |

## DAEWOO LANOS (KLAT) 09/97→ 2005

| NR | MAPCO | REF | | | ← | → | ↑ | ↓ | | | NEW | INFO |
|---|---|---|---|---|---|---|---|---|---|---|---|---|
| 1 | **19718** | 26001807 | ✓ | | ✓ | | | | ✓ | ✓ | | M16x1,5RHT |
| 2 | **19719** | 26001806 | ✓ | | | ✓ | | | ✓ | ✓ | | M16x1,5RHT |
| 3 | **19714** | 94788122 | ✓ | | ✓ | ✓ | | | ✓ | ✓ | | |
| 4 | **49756** | 96218397 | ✓ | | ✓ | | | | ✓ | ✓ | | |
| 5 | **49757** | 96218398 | ✓ | | | ✓ | | | ✓ | ✓ | | |
| 6 | **33757** | 352335 | ✓ | | ✓ | ✓ | | | ✓ | ✓ | | |
| 7 | **59295** | 07848281 | ✓ | | ✓ | | | | ✓ | ✓ | | |
| 8 | **59296** | 07848282 | ✓ | | | ✓ | | | ✓ | ✓ | | |
| 9 | **33752** | 9618 5973 | ✓ | | ✓ | ✓ | | | ✓ | ✓ | | |
| 10 | **59367** | 784 6696 | ✓ | | ✓ | ✓ | | | ✓ | ✓ | | L=98,5mm M16x1,5 |
| 11 | **33785** | 90189050 | | ✓ | ✓ | ✓ | | | ✓ | ✓ | ✓ | Ø 48,0mm |

## DAEWOO LAZETTI (KLAN) 02/04→

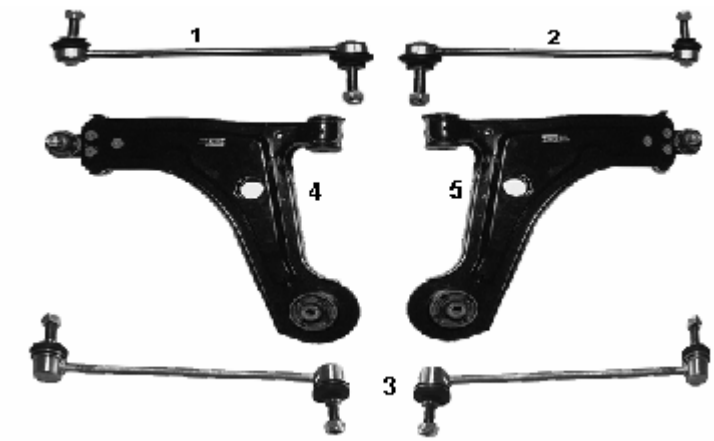


| NR | MAPCO | REF | | | ← | → | ↑ | ↓ | | | NEW | INFO |
|---|---|---|---|---|---|---|---|---|---|---|---|---|
| 1 | **51290** | 96403099 | ✓ | | ✓ | | | | ✓ | ✓ | | |
| 2 | **51291** | 96403100 | ✓ | | | ✓ | | | ✓ | ✓ | | |
| 3 | **51293** | 96561754 | | ✓ | ✓ | ✓ | | | ✓ | ✓ | ✓ | |
| 4 | **51294** | 96415063 | ✓ | | ✓ | | | ✓ | ✓ | ✓ | ✓ | |
| 5 | **51295** | 96415064 | ✓ | | | ✓ | | ✓ | ✓ | ✓ | ✓ | |

## DAEWOO LEGANZA (KLAV) 06/97→ 2005

| NR | MAPCO | REF | | | ← | → | ↑ | ↓ | | | NEW | INFO |
|---|---|---|---|---|---|---|---|---|---|---|---|---|
| 1 | **49295** | 9622 5858 | ✓ | | ✓ | | | | ✓ | ✓ | | M16x1,5RHT |
| 2 | **49296** | 9622 5859 | ✓ | | | ✓ | | | ✓ | ✓ | | M16x1,5RHT |
| 3 | **49297** | 9620 7628 | | ✓ | ✓ | ✓ | | | ✓ | ✓ | | |
| 4 | **59211** | 9620 5809 | ✓ | | ✓ | ✓ | | | ✓ | ✓ | | |
| 5 | **59217** | 520838 | ✓ | | ✓ | ✓ | | | ✓ | ✓ | | |

## DAEWOO NEXIA (KLETN) 02/95→08/97

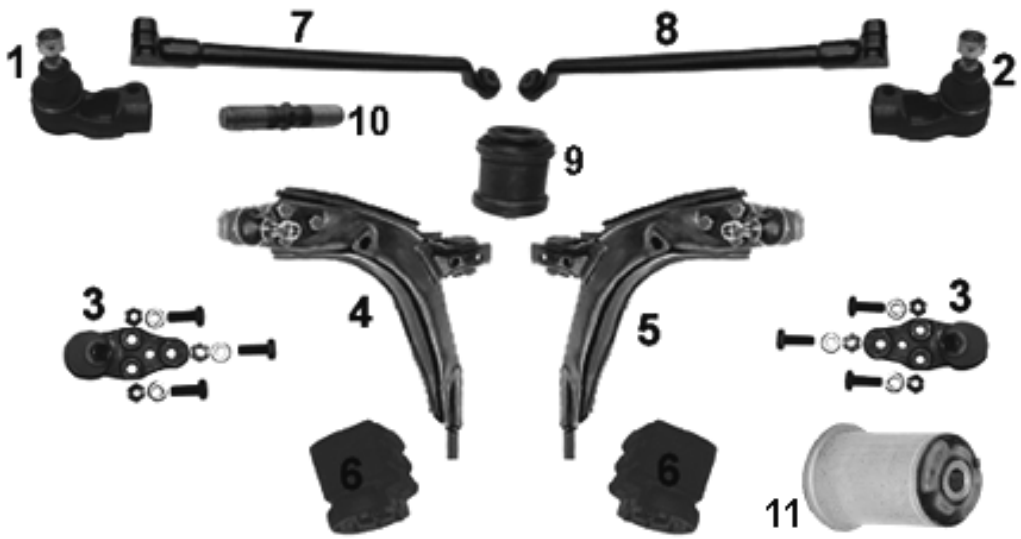


| NR | MAPCO | REF | | | ← | → | ↑ | ↓ | | | NEW | INFO |
|---|---|---|---|---|---|---|---|---|---|---|---|---|
| 1 | **19718** | 26001807 | ✓ | | ✓ | | | | ✓ | ✓ | | M16x1,5RHT |
| 2 | **19719** | 26001806 | ✓ | | | ✓ | | | ✓ | ✓ | | M16x1,5RHT |
| 3 | **19714** | 94788122 | ✓ | | ✓ | ✓ | | | ✓ | ✓ | | |
| 4 | **49756** | 96218397 | ✓ | | ✓ | | | | ✓ | ✓ | | |
| 5 | **49757** | 96218398 | ✓ | | | ✓ | | | ✓ | ✓ | | |
| 6 | **33757** | 352335 | ✓ | | ✓ | ✓ | | | ✓ | ✓ | | |
| 7 | **59295** | 07848281 | ✓ | | ✓ | | | | ✓ | ✓ | | |
| 8 | **59296** | 07848282 | ✓ | | | ✓ | | | ✓ | ✓ | | |
| 9 | **33752** | 9618 5973 | ✓ | | ✓ | ✓ | | | ✓ | ✓ | | |
| 10 | **59367** | 784 6696 | ✓ | | ✓ | ✓ | | | ✓ | ✓ | | L=98,5mm M16x1,5 |
| 11 | **33785** | 90189050 | | ✓ | ✓ | ✓ | | | ✓ | ✓ | ✓ | Ø 48,0mm |

## DAEWOO NUBIRA (KLAJ) 02/97→ 2005

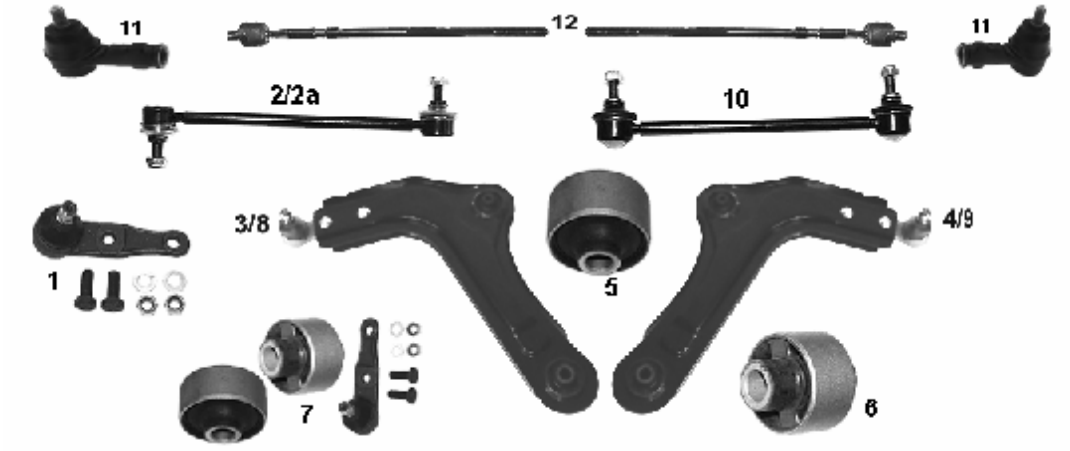


| NR | MAPCO | REF | | | ← | → | ↑ | ↓ | | | NEW | INFO |
|---|---|---|---|---|---|---|---|---|---|---|---|---|
| 1 | **19519** | 9630 0648 | ✓ | | ✓ | ✓ | | | ✓ | ✓ | | |
| 2 | **19559HPS** | 9630 0627 | ✓ | | | ✓ | | | ✓ | ✓ | | →12/1998 |
| 2a | **19558** | 9627 5798 | ✓ | | ✓ | ✓ | | | ✓ | ✓ | | 01/1999→ |
| 3 | **49597** | 9626 8439 | ✓ | | ✓ | | | | ✓ | ✓ | | →12/99 |
| 4 | **49598** | 9626 8440 | ✓ | | | ✓ | | | ✓ | ✓ | | →12/99 |
| 5 | **33570** | (9629 8000) | ✓ | | ✓ | ✓ | | | ✓ | ✓ | | |
| 6 | **33571** | (9630 8002) | ✓ | | ✓ | ✓ | | | ✓ | ✓ | | |
| 7 | **19299** | | ✓ | | ✓ | ✓ | | | ✓ | ✓ | | Kit |
| 8 | **49290** | 9626 8454 | ✓ | | ✓ | | | | ✓ | ✓ | | 01/00→ |
| 9 | **49291** | 9626 8455 | ✓ | | | ✓ | | | ✓ | ✓ | | 01/00→ |
| 10 | **49298HPS** | 9630 0222 | | ✓ | ✓ | ✓ | | | ✓ | ✓ | | |
| 11 | **59211** | 9620 5809 | ✓ | | ✓ | ✓ | | | ✓ | ✓ | | |
| 12 | **59217** | 520838 | ✓ | | ✓ | ✓ | | | ✓ | ✓ | | |

## DAEWOO NUBIRA (KLAN) 07/03→

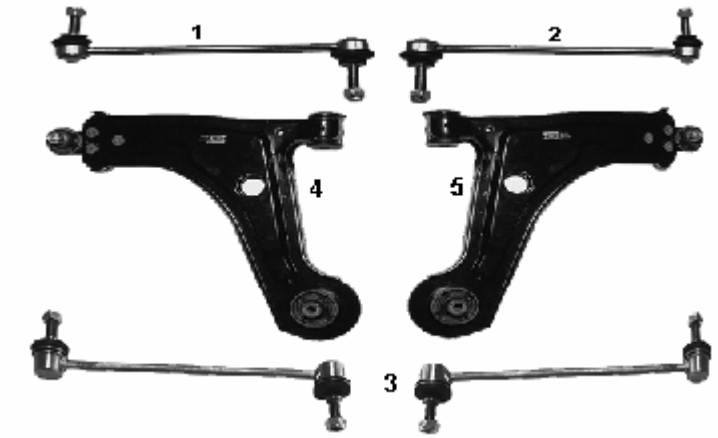


| NR | MAPCO | REF | | | ← | → | ↑ | ↓ | | | NEW | INFO |
|---|---|---|---|---|---|---|---|---|---|---|---|---|
| 1 | **51290** | 96403099 | ✓ | | ✓ | | | | ✓ | ✓ | | |
| 2 | **51291** | 96403100 | ✓ | | | ✓ | | | ✓ | ✓ | | |
| 3 | **51293** | 96561754 | | ✓ | ✓ | ✓ | | | ✓ | ✓ | ✓ | |
| 4 | **51294** | 96415063 | ✓ | | ✓ | | | ✓ | ✓ | ✓ | ✓ | |
| 5 | **51295** | 96415064 | ✓ | | | ✓ | | ✓ | ✓ | ✓ | ✓ | |
| | | | | | | | | | | | | |

## DAEWOO SANYUNG MUSSO (FJ) 01/99→ 2005

| NR | MAPCO | REF | | | ← | → | ↑ | ↓ | | | NEW | INFO |
|---|---|---|---|---|---|---|---|---|---|---|---|---|
| 1 | 19557 | 4666005501 | ✓ | | ✓ | ✓ | | | ✓ | ✓ | | M14 x 1,5 RHT |

## DAEWOO TICO (KLY3) 1995→ 2005
## DAEWOO MATIZ (KLYA) 1997→ 2005

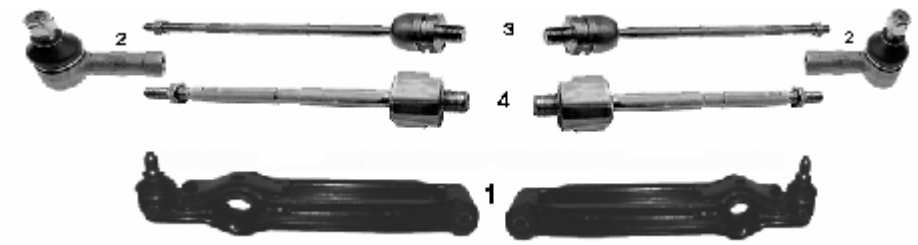


| NR | MAPCO | REF | | | ← | → | ↑ | ↓ | | | NEW | INFO |
|---|---|---|---|---|---|---|---|---|---|---|---|---|
| 1 | 19518 | 4500A78B01 | ✓ | | ✓ | ✓ | | | ✓ | ✓ | | |
| 2 | 19517 | 48810A78B00 | ✓ | | ✓ | ✓ | | | ✓ | ✓ | | M12x1,5RHT |
| 3 | 59717 | 521 257 | ✓ | | ✓ | ✓ | | | ✓ | ✓ | | Rad / wheel 175 |
| 4 | 59718 | KBJR45 | ✓ | | ✓ | ✓ | | | ✓ | ✓ | | M12x1,5RHT L= 268 mm |

# DAIHATSU

## DAIHATSU APPLAUSE 1989→07/97

| NR | MAPCO | REF | | | ← | → | ↑ | ↓ | | | NEW | INFO |
|---|---|---|---|---|---|---|---|---|---|---|---|---|
| 1 | 19597 | 45047-87784 | ✓ | | ✓ | ✓ | | | ✓ | ✓ | | M12x1,5RHT |
| 2 | 19598 | 45046-87784 | ✓ | | | ✓ | | | ✓ | ✓ | | M12x1,5RHT |

## DAIHATSU CHARADE II 01/83→12/86

| NR | MAPCO | REF | | | ← | → | ↑ | ↓ | | | NEW | INFO |
|---|---|---|---|---|---|---|---|---|---|---|---|---|
| 1 | 59212 | 48068-87705 | ✓ | | ✓ | ✓ | | | ✓ | ✓ | | |

## DAIHATSU CHARADE III 01/87→ 12/92

| NR | MAPCO | REF | | | ← | → | ↑ | ↓ | | | NEW | INFO |
|---|---|---|---|---|---|---|---|---|---|---|---|---|
| 1 | **19597** | 45047-87784 | ✓ | | ✓ | | | | ✓ | ✓ | | M12x1,5RHT |
| 2 | **19598** | 45046-87784 | ✓ | | | ✓ | | | ✓ | ✓ | | M12x1,5RHT |
| 3 | **59213** | 48069-87706 | ✓ | | ✓ | | | | ✓ | ✓ | | |
| 4 | **59218** | 48068-87706 | ✓ | | | ✓ | | | ✓ | ✓ | | |
| 5 | **59214** | 45503-87708 | ✓ | | ✓ | ✓ | | | ✓ | ✓ | | |
| | | | | | | | | | | | | |

## DAIHATSU CUORE II + III 1985→12/94

| NR | MAPCO | REF | | | ← | → | ↑ | ↓ | | | NEW | INFO |
|---|---|---|---|---|---|---|---|---|---|---|---|---|
| 1 | **59215** | 45046-87780<br>45046-87282 | ✓ | | | ✓ | | | ✓ | ✓ | | M12x1,5RHT |
| 2 | **59216** | 45047-87780<br>45047-87281 | ✓ | | ✓ | | | | ✓ | ✓ | | M12x1,5RHT |
| | | | | | | | | | | | | |

## DAIHATSU FEROZA (F300) 10/88→

| NR | MAPCO | REF | | | ← | → | ↑ | ↓ | | | NEW | INFO |
|---|---|---|---|---|---|---|---|---|---|---|---|---|
| 1 | **59208** | 45047-87680 | ✓ | | ✓ | | | | ✓ | ✓ | | M20x1,5LHT |
| 2 | **59207** | 45046-87680 | ✓ | | | ✓ | | | ✓ | ✓ | | M20x1,5RHT |
| | | | | | | | | | | | | |

## DAIHATSU HI-JET 06/86→12/89

| NR | MAPCO | REF | | | ← | → | ↑ | ↓ | | | NEW | INFO |
|---|---|---|---|---|---|---|---|---|---|---|---|---|
| 1 | **19531** | 45047-87580 | ✓ | | ✓ | | | | ✓ | ✓ | | |
| 2 | **19532** | 45046-87580 | ✓ | | | ✓ | | | ✓ | ✓ | | |

## DAIHATSU ROCKY (F7, F8) 02/85→

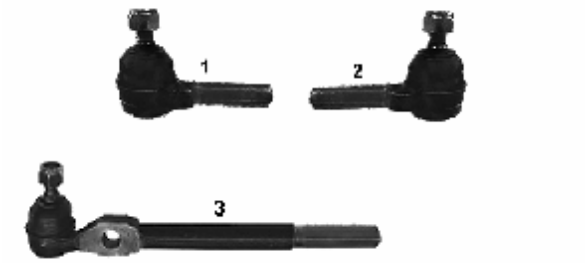


| NR | MAPCO | REF | | | ← | → | ↑ | ↓ | | | NEW | INFO |
|---|---|---|---|---|---|---|---|---|---|---|---|---|
| 1 | **59208** | 45047-87680 | ✓ | | ✓ | | | | ✓ | ✓ | | M20x1,5LHT |
| 2 | **59207** | 45046-87680 | ✓ | | | ✓ | | | ✓ | ✓ | | M20x1,5RHT |
| 3 | **59209** | 45047-87682 | ✓ | | ✓ | | | | ✓ | ✓ | | M22x1,5LHT |

## DAIHATSU WILDCAT ROCKY (F70), (F75) 02/85→04/87

| NR | MAPCO | REF | | | ← | → | ↑ | ↓ | | | NEW | INFO |
|---|---|---|---|---|---|---|---|---|---|---|---|---|
| 1 | **59208** | 45047-87680 | ✓ | | ✓ | | | | ✓ | ✓ | | M20x1,5LHT |
| 2 | **59207** | 45046-87680 | ✓ | | | ✓ | | | ✓ | ✓ | | M20x1,5RHT |

# FIAT

## FIAT BARCHETTA 03/95→

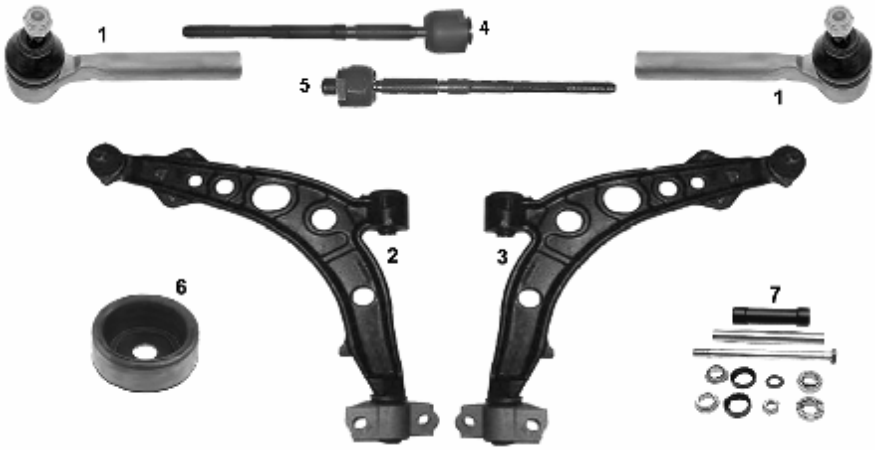


| NR | MAPCO | REF | | | ← | → | ↑ | ↓ | | | NEW | INFO |
|---|---|---|---|---|---|---|---|---|---|---|---|---|
| 1 | **19065** | 7752285 | ✓ | | ✓ | ✓ | | | ✓ | ✓ | | M12x1,5RHT |
| 2 | **19066** | 7750977 | ✓ | | ✓ | ✓ | | | ✓ | ✓ | | |
| 3 | **19067** | 7750978 | ✓ | | ✓ | ✓ | | | ✓ | ✓ | | |
| 4 | **19068** | 7701491 | ✓ | | ✓ | ✓ | | | | ✓ | | M12x1,5RHT |
| 5 | **19079** | 9945562 | ✓ | | ✓ | ✓ | | | ✓ | | | |
| 6 | **33005** | 46476755 | | ✓ | ✓ | ✓ | | | ✓ | ✓ | | |
| 7 | **34053** | 17736515 | | ✓ | ✓ | ✓ | | | ✓ | ✓ | | |

## FIAT BRAVA - BRAVO 1995→10/01

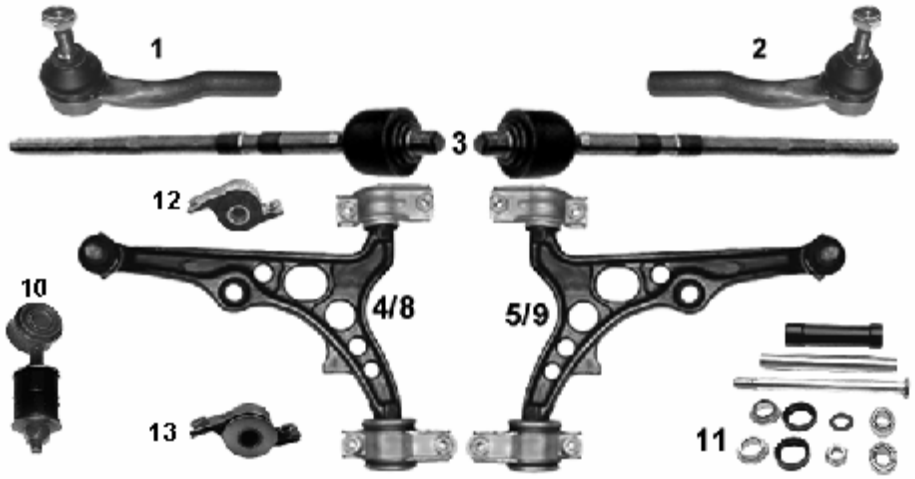


| NR | MAPCO | REF | | | ← | → | ↑ | ↓ | | | NEW | INFO |
|---|---|---|---|---|---|---|---|---|---|---|---|---|
| 1 | 19052 | 7591216<br>60809495 | ✓ | | ✓ | | | | ✓ | ✓ | | M12x1,5RHT |
| 2 | 19053 | 7591215<br>60809494 | ✓ | | | ✓ | | | ✓ | ✓ | | M12x1,5RHT |
| 3 | 19022 | 9941625 | ✓ | | ✓ | ✓ | | | ✓ | ✓ | | M12x1,5RHT |
| 4 | 19056 | 46423822 | ✓ | | ✓ | | | | ✓ | ✓ | | Ø 17 mm 2.0 |
| 5 | 19057 | 46423823 | ✓ | | | ✓ | | | ✓ | ✓ | | Ø 17 mm 2.0 |
| 6 | 19022/1 | | ✓ | | ✓ | | | | ✓ | ✓ | | 1 + 3 |
| 7 | 19022/2 | | ✓ | | | ✓ | | | ✓ | ✓ | | 2 + 3 |
| 8 | 19009 | 46474556 | ✓ | | ✓ | | | | ✓ | ✓ | | ✓ 2.0 |
| 9 | 19010 | 46474557 | ✓ | | | ✓ | | | ✓ | ✓ | | ✓ 2.0 |
| 10 | 33009 | 60809242S | ✓ | | ✓ | ✓ | | | ✓ | ✓ | | |
| 11 | 34054 | | | ✓ | ✓ | ✓ | | | ✓ | ✓ | | |
| 12 | 33019 | 7601065 | ✓ | | ✓ | ✓ | | | ✓ | ✓ | ✓ | |
| 13 | 33035 | 7601068 | ✓ | | ✓ | ✓ | | | ✓ | ✓ | ✓ | |

## FIAT CINQUECENTO 1992→01/98
## FIAT SEICENTO 01/98→

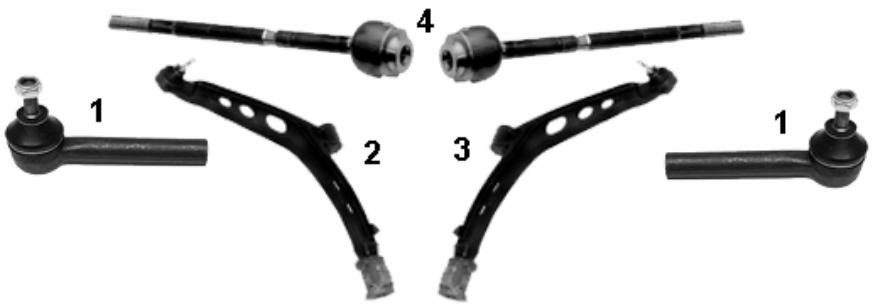


| NR | MAPCO | REF | | | ← | → | ↑ | ↓ | | | NEW | INFO |
|---|---|---|---|---|---|---|---|---|---|---|---|---|
| 1 | 19042 | 5960036 | ✓ | | ✓ | ✓ | | | ✓ | ✓ | | M12x1,5RHT |
| 2 | 19072 | 7636995 | ✓ | | ✓ | | | | ✓ | ✓ | | |
| 3 | 19073 | 7636996 | ✓ | | | ✓ | | | ✓ | ✓ | | |
| 4 | 19069 | 7658273 | ✓ | | ✓ | ✓ | | | ✓ | ✓ | | |

## FIAT CROMA (154) 10/85→12/96

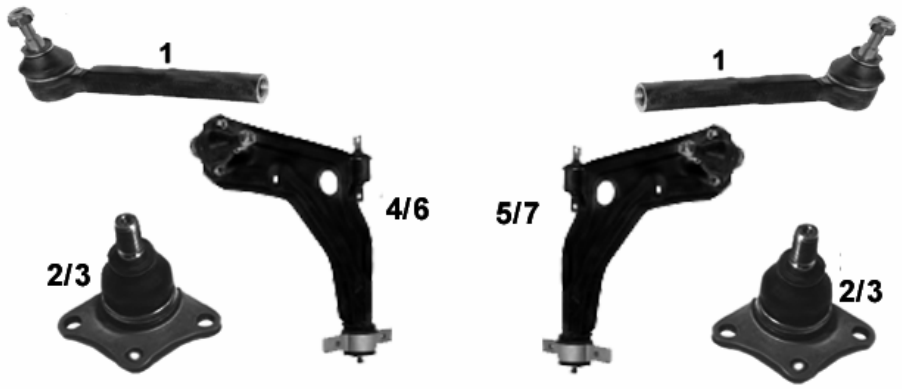


| NR | MAPCO | REF | | | ← | → | ↑ | ↓ | | | NEW | INFO |
|---|---|---|---|---|---|---|---|---|---|---|---|---|
| 1 | 19058 | 82392503<br>99239556 | ✓ | | ✓ | ✓ | | | ✓ | ✓ | | →03/86 M12x1,5RHT |
| 1 | 19059 | 82387676 | ✓ | | ✓ | ✓ | | | ✓ | ✓ | | 04/86→ M14x1,5RHT |
| 2 | 19060 | 82398170<br>82446499 | ✓ | | ✓ | ✓ | | | ✓ | ✓ | | →12/91 Ø 13 mm |
| 3 | 19008 | 60510360<br>82420623 | ✓ | | ✓ | ✓ | | | ✓ | ✓ | | 01/92→ Ø 15 mm |
| 4 | 19061 | 82406867 | ✓ | | ✓ | | | | ✓ | ✓ | | 01/92→ Ø 15 mm |
| 5 | 19062 | 82406868 | ✓ | | | ✓ | | | ✓ | ✓ | | 01/92→ Ø 15 mm |
| 6 | 19020 | 60801529 | ✓ | | ✓ | | | | ✓ | ✓ | | 01/92→ Ø 15 mm |
| 7 | 19021 | 60801528 | ✓ | | | ✓ | | | ✓ | ✓ | | 01/92→ Ø 15 mm |

## FIAT CROMA (194) 06/05→

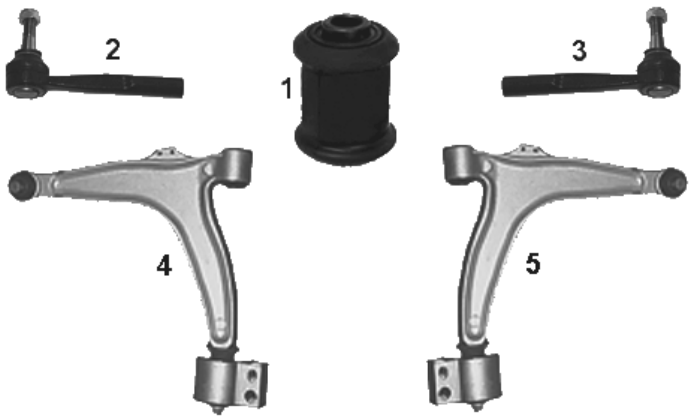


| NR | MAPCO | REF | | | ← | → | ↑ | ↓ | | | NEW | INFO |
|---|---|---|---|---|---|---|---|---|---|---|---|---|
| 1 | 33788 | 352 323 | ✓ | | ✓ | ✓ | | | ✓ | ✓ | | |
| 2 | 49620 | 7736 3713 | ✓ | | ✓ | | | | ✓ | ✓ | ✓ | M14x1,5 |
| 3 | 49621 | 7736 3712 | ✓ | | | ✓ | | | ✓ | ✓ | ✓ | M14x1,5 |
| 4 | 49623 | 5174 8653 | ✓ | | ✓ | | | | ✓ | ✓ | ✓ | |
| 5 | 49624 | 5174 8652 | ✓ | | | ✓ | | | ✓ | ✓ | ✓ | |

## FIAT DAILY OM GRINTA 01/78→04/99
## IVECO TURBO DAILY 4WD 1987→04/99

| NR | MAPCO | REF | | | ← | → | ↑ | ↓ | | | NEW | INFO |
|---|---|---|---|---|---|---|---|---|---|---|---|---|
| 1 | 19406 | 93800662 | ✓ | | ✓ | ✓ | | | ✓ | ✓ | | Konus 16mm / M16x1,5RHT |
| 2 | 19407 | 93802209 | ✓ | | ✓ | ✓ | | | ✓ | ✓ | | Konus 21mm / M20x1,5RHT |
| 3 | 19408 | 93802242 | ✓ | | ✓ | ✓ | ✓ | ✓ | ✓ | ✓ | | Konus 21,5 mm |

## FIAT DOBLO / DOBLO Cargo 03/01→

| NR | MAPCO | REF | | | ← | → | ↑ | ↓ | | | NEW | INFO |
|---|---|---|---|---|---|---|---|---|---|---|---|---|
| 1 | 49036 | 46 813 842<br>46 777 742 | ✓ | | ✓ | | | | ✓ | ✓ | | Chassis 5023343 → |
| 2 | 49037 | 46 813 841<br>46 777 741 | ✓ | | | ✓ | | | ✓ | ✓ | | Chassis 5023343 → |
| 3 | 19015 | 994 7714 | ✓ | | ✓ | ✓ | | | ✓ | ✓ | | M14x1,5RHT |
| 4 | 49038 | 46 543 045 | ✓ | | ✓ | ✓ | | | ✓ | ✓ | | |
| 5 | 49039 | 46 799 278<br>46 767 267 | | ✓ | ✓ | ✓ | | | ✓ | ✓ | | |
| 6 | 33018 | 46 421 522 | ✓ | | ✓ | ✓ | | | ✓ | ✓ | ✓ | |
| 7 | 49089 | 51 727 865 | ✓ | | ✓ | | | ✓ | ✓ | ✓ | ✓ | ✓ Cargo |
| 8 | 49090 | 51 727 863 | ✓ | | | ✓ | | ✓ | ✓ | ✓ | ✓ | ✓ Cargo |

## FIAT DUCATO 01/82→ 03/94
## FIAT TALENTO 03/89→03/94

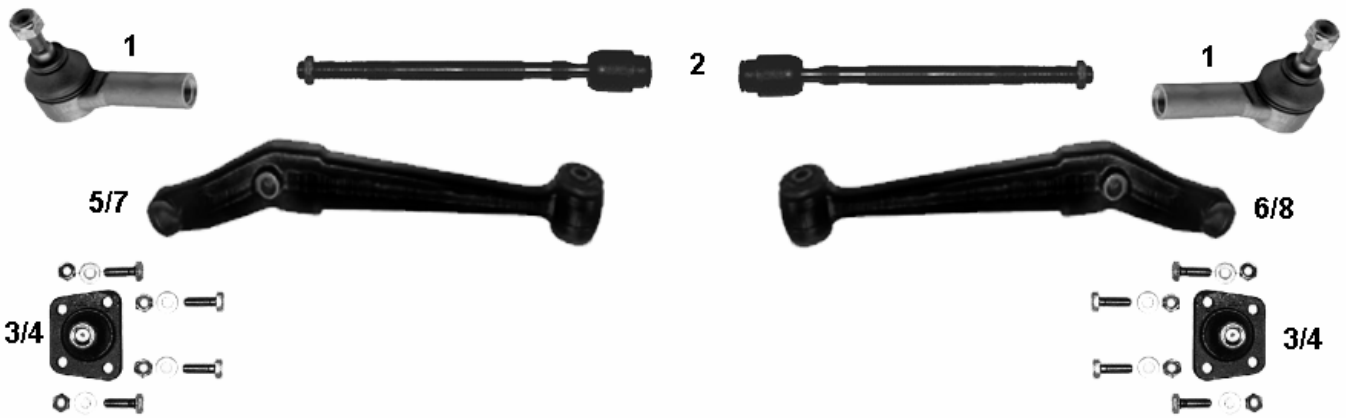


| NR | MAPCO | REF | | | ← | → | ↑ | ↓ | | | NEW | INFO |
|---|---|---|---|---|---|---|---|---|---|---|---|---|
| 1 | 19420 | 9750079980<br>4336779 | ✓ | | ✓ | ✓ | | | ✓ | ✓ | | M16x1,5RHT |
| 2 | 19405 | 9750390080<br>9790002680 | ✓ | | ✓ | ✓ | | | | ✓ | | M16x1,5RHT |
| 3 | 19421 | 4388159 | ✓ | | ✓ | ✓ | | | ✓ | ✓ | | →09/85 Ø 16 mm |
| 4 | 19422 | 7567284 | ✓ | | ✓ | ✓ | | | ✓ | ✓ | | 10/85→ Ø 17 mm |
| 5 | 19441 | 1317240080 | ✓ | | ✓ | | | | ✓ | ✓ | | 10/85→93 ✓ 1.0-1.4t |
| 6 | 19442 | 1317241080 | ✓ | | | ✓ | | | ✓ | ✓ | | 10/85→93 ✓ 1.0-1.4t |
| 7 | 19468 | 1317238080 | ✓ | | ✓ | | | | ✓ | ✓ | | 10/85→93 ✓ 1.8 t |
| 8 | 19469 | 1317239080 | ✓ | | | ✓ | | | ✓ | ✓ | | 10/85→93 ✓ 1.8 t |

## FIAT DUCATO

03/94→ 01/01

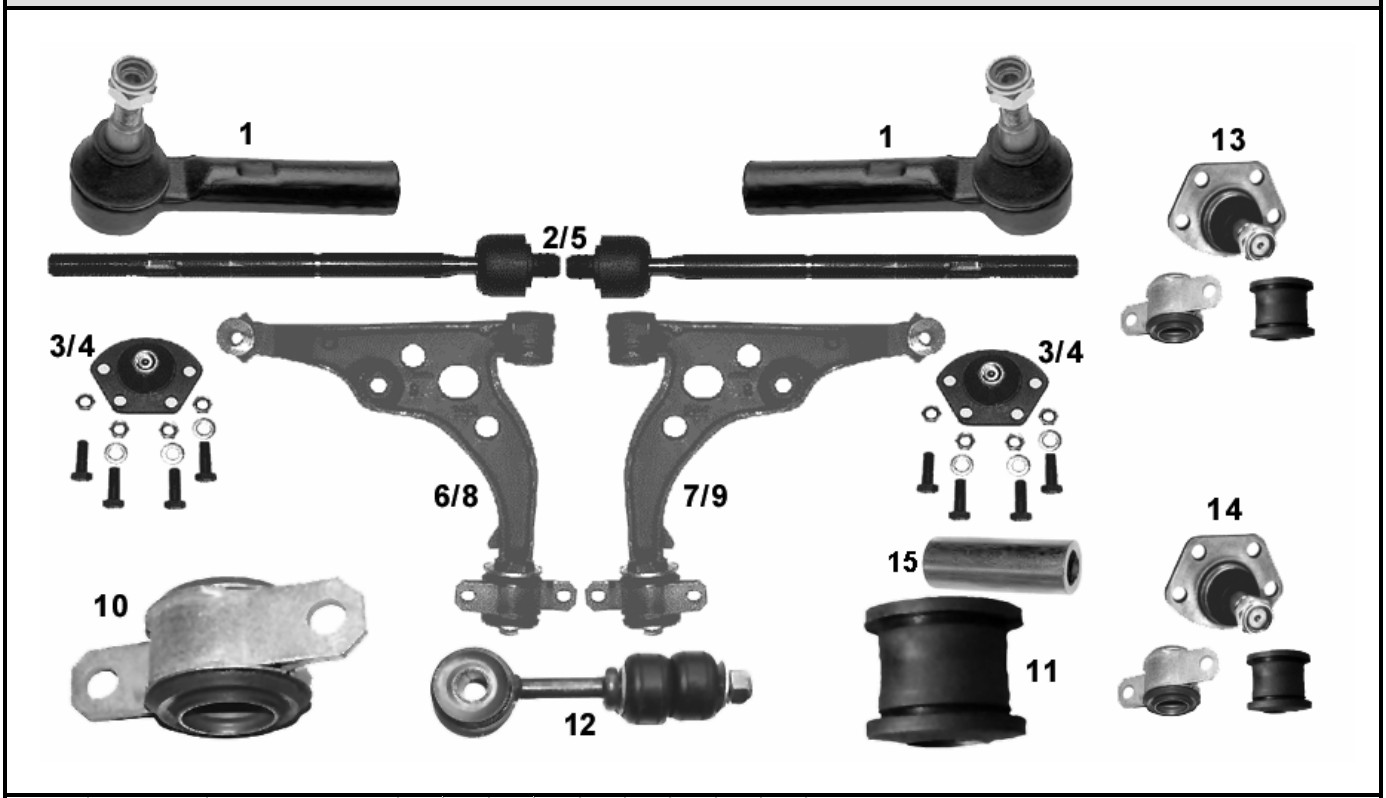


| NR | MAPCO | REF | | | ← | → | ↑ | ↓ | | | NEW | INFO |
|---|---|---|---|---|---|---|---|---|---|---|---|---|
| 1 | 19447 | 1306716080 | ✓ | | ✓ | ✓ | | | ✓ | ✓ | | M16x1,5RHT L=120,0mm |
| 2 | 19448 | 14716544080 | ✓ | | ✓ | ✓ | | | | ✓ | | |
| 3 | 19449 | 1302368080 | ✓ | | ✓ | ✓ | | | ✓ | ✓ | | ✓ (1.0t-1.4t) |
| 4 | 19450 | 1300473080 | ✓ | | ✓ | ✓ | | | ✓ | ✓ | | ✓ (1.8t) |
| 5 | 19458 | 9945836 | ✓ | | ✓ | ✓ | | | ✓ | | | |
| 6 | 19461 | 1320786080 | ✓ | | ✓ | | | | ✓ | ✓ | | ✓ (1.0t-1.4t) |
| 7 | 19462 | 1317241080 | ✓ | | | ✓ | | | ✓ | ✓ | | ✓ (1.0t-1.4t) |
| 8 | 19463 | 1317238080 | ✓ | | ✓ | | | | ✓ | ✓ | | ✓ (1.8t) |
| 9 | 19464 | 1317239080 | ✓ | | | ✓ | | | ✓ | ✓ | | ✓ (1.8t) |
| 10 | 33001 | 352394 | ✓ | | ✓ | ✓ | | | ✓ | ✓ | | |
| 11 | 33006 | 352393 | ✓ | | ✓ | ✓ | | | ✓ | ✓ | | |
| 15 | 33006/1 | 352505 | ✓ | | ✓ | ✓ | | | ✓ | ✓ | | Hülse |
| 12 | 19366 | 0000508737 | ✓ | | ✓ | ✓ | | | ✓ | ✓ | | |
| 13 | 19251 | | ✓ | | ✓ | ✓ | | | ✓ | ✓ | | Kit ✓ (1.0t-1.4t) |
| 14 | 19250 | | ✓ | | ✓ | ✓ | | | ✓ | ✓ | | Kit ✓ (1.8t) |

## FIAT DUCATO 02/01→

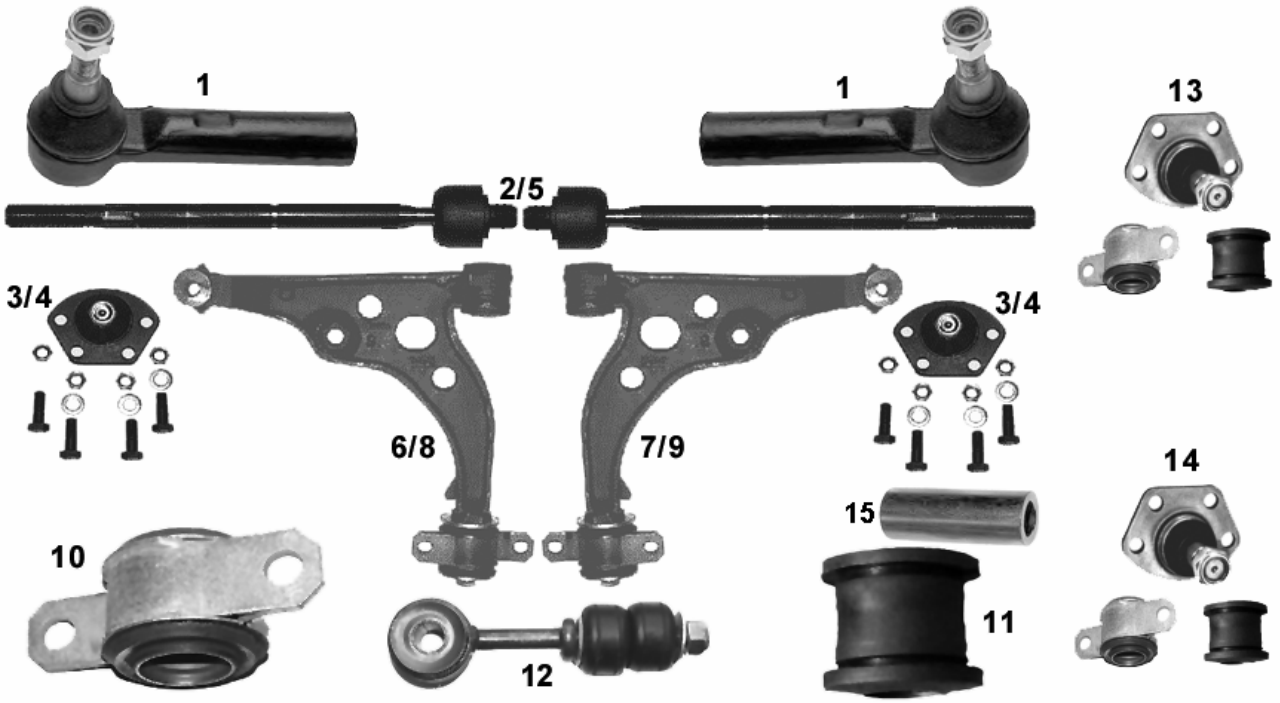


| NR | MAPCO | REF | | | ← | → | ↑ | ↓ | | | NEW | INFO |
|---|---|---|---|---|---|---|---|---|---|---|---|---|
| 1 | 19447 | 1306716080 | ✓ | | ✓ | ✓ | | | ✓ | ✓ | | M16x1,5RHT L=120,0mm |
| 2 | 19448 | 14716544080 | ✓ | | ✓ | ✓ | | | | ✓ | | |
| 3 | 19449 | 1302368080 | ✓ | | ✓ | ✓ | | | ✓ | ✓ | | ✓ (1.0t-1.4t) |
| 4 | 19450 | 1300473080 | ✓ | | ✓ | ✓ | | | ✓ | ✓ | | ✓ (1.8t) |
| 5 | 19458 | 9945836 | ✓ | | ✓ | ✓ | | | ✓ | | | |
| 6 | 49084 | 1331938080 | ✓ | | ✓ | | | | ✓ | ✓ | | ✓ (1.0t-1.4t) |
| 7 | 49085 | 1331940080 | ✓ | | | ✓ | | | ✓ | ✓ | | ✓ (1.0t-1.4t) |
| 8 | 49086 | 1339464080 | ✓ | | ✓ | | | | ✓ | ✓ | | ✓ (1.8t) |
| 9 | 49087 | 1331939080 | ✓ | | | ✓ | | | ✓ | ✓ | | ✓ (1.8t) |
| 10 | 33001 | 352394 | ✓ | | ✓ | ✓ | | | ✓ | ✓ | | |
| 11 | 33006 | 352393 | ✓ | | ✓ | ✓ | | | ✓ | ✓ | | |
| 15 | 33006/1 | 352505 | ✓ | | ✓ | ✓ | | | ✓ | ✓ | | Hülse |
| 12 | 19366 | 508737 | ✓ | | ✓ | ✓ | | | ✓ | ✓ | | |
| 13 | 19251 | | ✓ | | ✓ | ✓ | | | ✓ | ✓ | | Kit ✓ (1.0t-1.4t) |
| 14 | 19250 | | ✓ | | ✓ | ✓ | | | ✓ | ✓ | | Kit ✓ (1.8t) |

## FIAT FIORINO (146) 1993→

| NR | MAPCO | REF | | | ← | → | ↑ | ↓ | | | NEW | INFO |
|---|---|---|---|---|---|---|---|---|---|---|---|---|
| 1 | 49010 | 7690960<br>50006262 | ✓ | | ✓ | ✓ | | | ✓ | ✓ | | M14x1,5RHT |
| 2 | 49011 | 7693816 | ✓ | | ✓ | ✓ | | | ✓ | ✓ | | M16x1,5RHT |
| 3 | 49012 | 7674825 | ✓ | | ✓ | ✓ | | | ✓ | ✓ | | Chassis 8157358→ |
| 4 | 19043 | 7076231 | ✓ | | ✓ | ✓ | | | ✓ | ✓ | | M12x1,5RHT |

## FIAT GRANDE PUNTO (199) 10/05 →

| NR | MAPCO | REF | | | ← | → | ↑ | ↓ | | | NEW | INFO |
|---|---|---|---|---|---|---|---|---|---|---|---|---|
| 1 | 19097 | 55703629 | ✓ | | ✓ | | | | ✓ | ✓ | ✓ | |
| 2 | 19098 | 55703627 | ✓ | | | ✓ | | | ✓ | ✓ | ✓ | |
| 3 | 33044 | 55703232 | ✓ | | ✓ | ✓ | | | ✓ | ✓ | ✓ | |
| 4 | 33045 | 55700751 | ✓ | | ✓ | ✓ | | | ✓ | ✓ | ✓ | |

## FIAT IDEA 01/04→

| NR | MAPCO | REF | | | ← | → | ↑ | ↓ | | | NEW | INFO |
|---|---|---|---|---|---|---|---|---|---|---|---|---|
| 1 | 49059 | 77362503 | ✓ | | ✓ | ✓ | | | ✓ | ✓ | | M14x1,5RHT 1 |

## FIAT MAREA + MAREA WEEKEND 09/96→

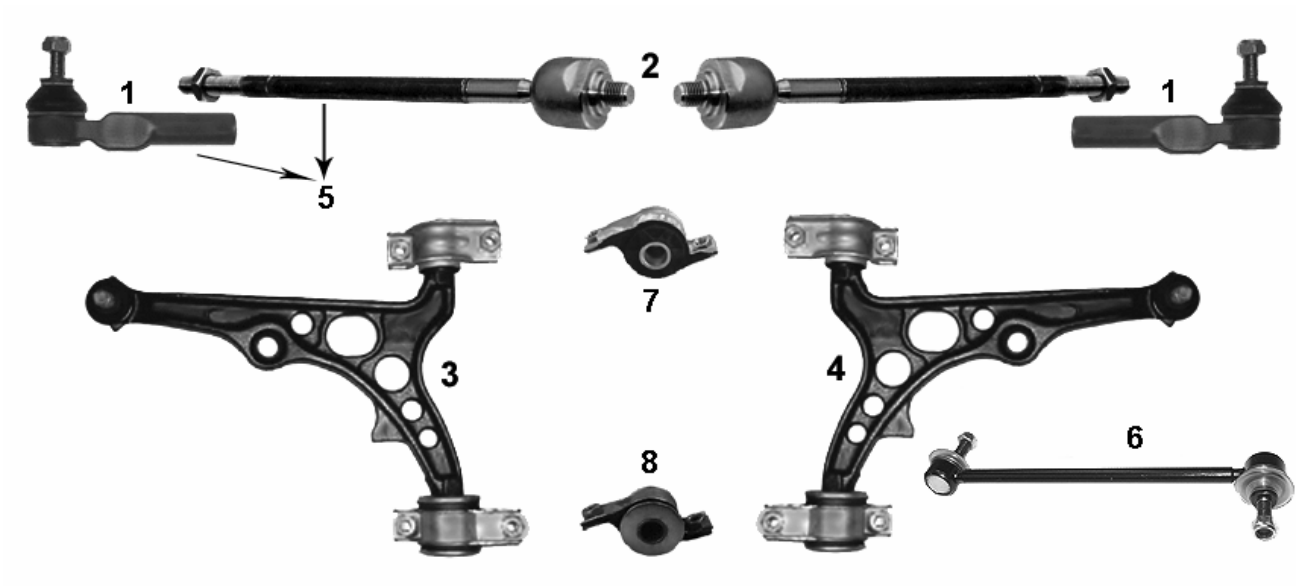


| NR | MAPCO | REF | | | ← | → | ↑ | ↓ | | | NEW | INFO |
|---|---|---|---|---|---|---|---|---|---|---|---|---|
| 1 | **19015** | 9947714 | ✓ | | ✓ | ✓ | | | ✓ | ✓ | | M14x1,5RHT 2.0, 2.4TD, 2.4JTD |
| 2 | **19023** | 9947713 | ✓ | | ✓ | ✓ | | | ✓ | ✓ | | M14x1,5RHT |
| 3 | **19009** | 46456050<br>46474556<br>46423824 | ✓ | | ✓ | | | | ✓ | ✓ | | + |
| 4 | **19010** | 46456049<br>46474557<br>46423825 | ✓ | | | ✓ | | | ✓ | ✓ | | + |
| 5 | **19023/1** | | ✓ | | ✓ | ✓ | | | ✓ | ✓ | | **1 + 2** |
| 6 | **19026HPS** | 46413122 | ✓ | | ✓ | ✓ | | | ✓ | ✓ | | |
| 7 | **33019** | 7601065 | ✓ | | ✓ | ✓ | | | ✓ | ✓ | ✓ | |
| 8 | **33035** | 7601068 | ✓ | | ✓ | ✓ | | | ✓ | ✓ | ✓ | |
| | | | | | | | | | | | | |

## FIAT MULTIPLA (186) 04/99→

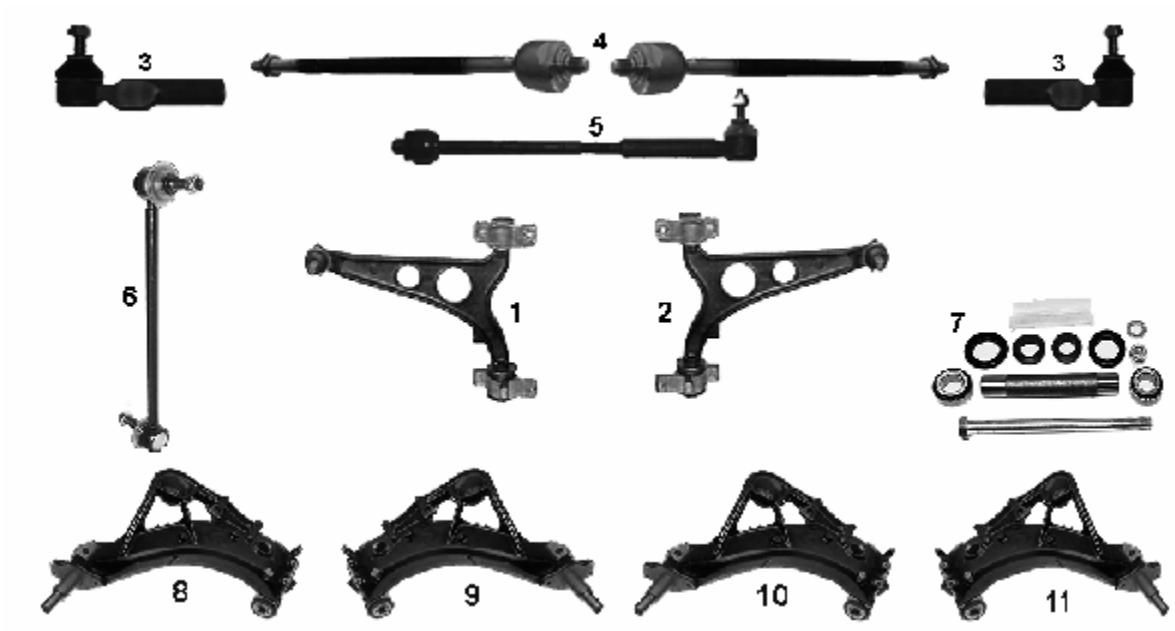


| NR | MAPCO | REF | | | ← | → | ↑ | ↓ | | | NEW | INFO |
|---|---|---|---|---|---|---|---|---|---|---|---|---|
| 1 | **49064** | 46764746 | ✓ | | ✓ | | | | ✓ | ✓ | | |
| 2 | **49065** | 46764747 | ✓ | | | ✓ | | | ✓ | ✓ | | |
| 3 | **19015** | 9947714 | ✓ | | ✓ | ✓ | | | ✓ | ✓ | | M14x1,5RHT |
| 4 | **19023** | 9947713 | ✓ | | ✓ | ✓ | | | ✓ | ✓ | | M14x1,5RHT |
| 5 | **19023/1** | | ✓ | | ✓ | ✓ | | | ✓ | ✓ | | **3 + 4** |
| 6 | **19026HPS** | 46413122 | ✓ | | ✓ | ✓ | | | ✓ | ✓ | | |
| 7 | **34053** | 17736515 | | ✓ | ✓ | ✓ | | | ✓ | ✓ | | |
| 8 | **49060** | 7736514 | | ✓ | ✓ | | | | ✓ | ✓ | ✓ | ~~**ABS**~~ |
| 9 | **49061** | 7736515 | | ✓ | | ✓ | | | ✓ | ✓ | ✓ | ~~**ABS**~~ |
| 10 | **49062** | 7769900 | | ✓ | ✓ | | | | ✓ | ✓ | ✓ | **ABS** |
| 11 | **49063** | 7769901 | | ✓ | | ✓ | | | ✓ | ✓ | ✓ | **ABS** |

## FIAT PALIO + WEEKEND 04/96→

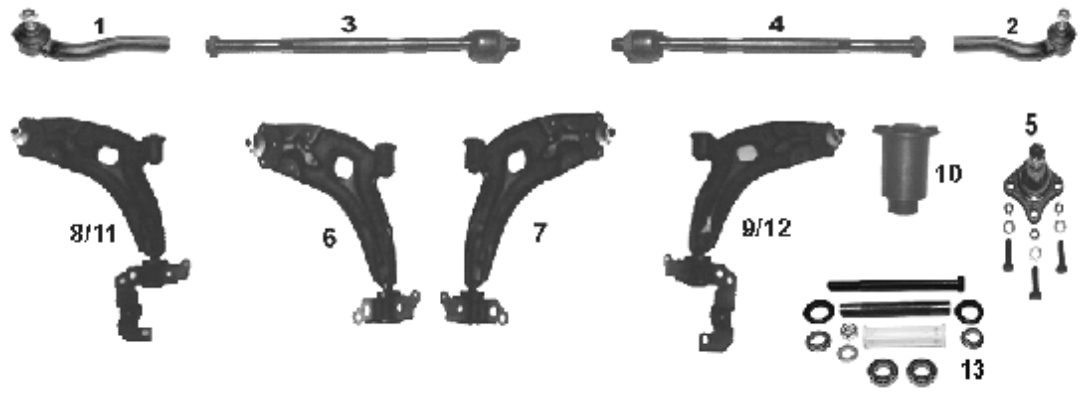


| NR | MAPCO | REF | | | ← | → | ↑ | ↓ | | | NEW | INFO |
|---|---|---|---|---|---|---|---|---|---|---|---|---|
| 1 | 49017 | 46745364 | ✓ | | ✓ | ✓ | | | ✓ | ✓ | | M14x1,5RHT |
| 2 | 49018 | 46745365 | ✓ | | ✓ | ✓ | | | ✓ | ✓ | | M14x1,5RHT |
| 3 | 49019 | 7079383 | ✓ | | ✓ | ✓ | | | | ✓ | | |
| 4 | 49020 | 7079382 | ✓ | | ✓ | ✓ | | | ✓ | | | |
| 5 | 49021 | 46437951 | ✓ | | ✓ | ✓ | | | ✓ | ✓ | | |
| 6 | 49022 | 46454595 | ✓ | | ✓ | | | | | ✓ | | 01/98→ |
| 7 | 49023 | 46454596 | ✓ | | | ✓ | | | | ✓ | | 01/98→ |
| 8 | 49024 | 46454597 | ✓ | | ✓ | | | | ✓ | ✓ | | |
| 9 | 49025 | 46454598 | ✓ | | | ✓ | | | ✓ | ✓ | | |
| 10 | 33018 | 46421522 | ✓ | | ✓ | ✓ | | | ✓ | ✓ | ✓ | |
| 11 | 49051 | 46546777 | ✓ | | ✓ | | | | ✓ | | | |
| 12 | 49052 | 46546776 | ✓ | | | ✓ | | | ✓ | | | |
| 13 | 34054 | | | ✓ | ✓ | ✓ | | | ✓ | ✓ | | |

## FIAT PANDA (141A_) 1980→1995

| NR | MAPCO | REF | | | ← | → | ↑ | ↓ | | | NEW | INFO |
|---|---|---|---|---|---|---|---|---|---|---|---|---|
| 1 | 19046 | 5950834<br>5960835 | ✓ | | ✓ | ✓ | | | | ✓ | | 10/82→ M12x1,5RHT |
| 2 | 19044 | 4402649 | ✓ | | ✓ | ✓ | | | | ✓ | | |
| 3 | 19048 | 4403138<br>5995503 | ✓ | | ✓ | ✓ | | | | ✓ | | |
| 4 | 19045 | 4402672<br>7601261 | ✓ | | ✓ | ✓ | | | | ✓ | | |
| 5 | 19452 | 5960321 | ✓ | | ✓ | ✓ | | | | ✓ | ✓ | M12x1,5RH |

## FIAT PANDA (169) 09/03→

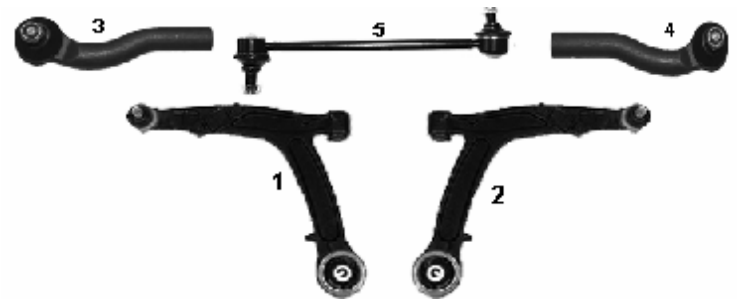


| NR | MAPCO | REF | | | ← | → | ↑ | ↓ | | | NEW | INFO |
|---|---|---|---|---|---|---|---|---|---|---|---|---|
| 1 | **49054** | 50703128 | ✓ | | ✓ | | | | ✓ | ✓ | | |
| 2 | **49055** | 50703129 | ✓ | | | ✓ | | | ✓ | ✓ | | |
| 3 | **49057** | 77362507 | ✓ | | ✓ | | | | ✓ | ✓ | | M12x1,5LHT |
| 4 | **49058** | 77362508 | ✓ | | | ✓ | | | ✓ | ✓ | | M12x1,5RHT |
| 5 | **49066HPS** | 50703296 | ✓ | | ✓ | ✓ | | | ✓ | ✓ | | 315 mm |
| 6 | **49072** | 77362506 | ✓ | | ✓ | ✓ | | | ✓ | ✓ | ✓ | |

## FIAT PUNTO (176) 1994→ 09/99

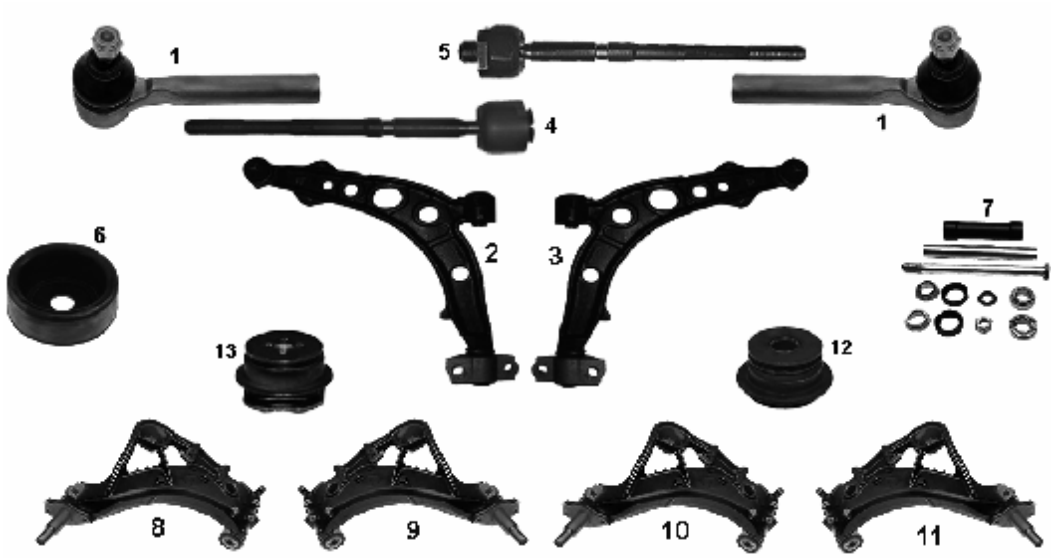


| NR | MAPCO | REF | | | ← | → | ↑ | ↓ | | | NEW | INFO |
|---|---|---|---|---|---|---|---|---|---|---|---|---|
| 1 | **19065** | 7752285<br>9946949 | ✓ | | ✓ | ✓ | | | ✓ | ✓ | | M12x1,5RHT |
| 2 | **19066** | 46430002<br>7750977 | ✓ | | ✓ | ✓ | | | ✓ | ✓ | | |
| 3 | **19067** | 46430003<br>7750978 | ✓ | | ✓ | ✓ | | | ✓ | ✓ | | |
| 4 | **19068** | 7701491 | ✓ | | ✓ | ✓ | | | | ✓ | | M12x1,5RHT |
| 5 | **19079** | 9945562 | ✓ | | ✓ | ✓ | | | ✓ | | | |
| 6 | **33005** | 46476755 | | ✓ | ✓ | ✓ | | | ✓ | ✓ | | |
| 7 | **34053** | 17736515 | | ✓ | ✓ | ✓ | | | ✓ | ✓ | | |
| 8 | **49060** | 7736514 | | ✓ | ✓ | | | | ✓ | ✓ | | ~~**ABS**~~ |
| 9 | **49061** | 7736515 | | ✓ | | ✓ | | | ✓ | ✓ | | ~~**ABS**~~ |
| 10 | **49062** | 7769900 | | ✓ | ✓ | | | | ✓ | ✓ | | **ABS** |
| 11 | **49063** | 7769901 | | ✓ | | ✓ | | | ✓ | ✓ | | **ABS** |
| 12 | **33039** | 7755671 | | ✓ | ✓ | ✓ | | | ✓ | ✓ | ✓ | **vorn/front** |
| 13 | **33040** | 7756218 | | ✓ | ✓ | ✓ | | | ✓ | ✓ | ✓ | **hinten/rear** |

## FIAT PUNTO (188) 09/99→

| NR | MAPCO | REF | | | ← | → | ↑ | ↓ | | | NEW | INFO |
|---|---|---|---|---|---|---|---|---|---|---|---|---|
| 1 | 33011 | | ✓ | | ✓ | ✓ | | ✓ | ✓ | ✓ | | |
| 2 | 33012 | | ✓ | | ✓ | ✓ | | ✓ | ✓ | ✓ | | |
| 3 | 19024 | 9948343 | ✓ | | ✓ | ✓ | | | ✓ | ✓ | | M12x1,5RHT |
| 4 | 49044 | 4654 5660 | ✓ | | ✓ | | | ✓ | | ✓ | | |
| 5 | 49045 | 4654 5661 | ✓ | | | ✓ | | ✓ | ✓ | ✓ | | |

## FIAT STILO (192) 10/01→

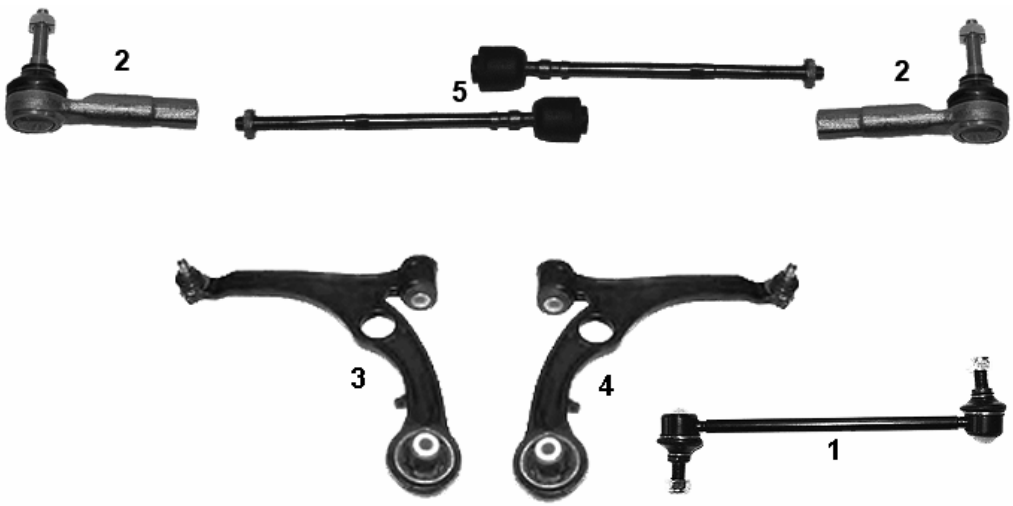


| NR | MAPCO | REF | | | ← | → | ↑ | ↓ | | | NEW | INFO |
|---|---|---|---|---|---|---|---|---|---|---|---|---|
| 1 | 19028HPS | 50700941 | ✓ | | ✓ | ✓ | | | ✓ | ✓ | | |
| 2 | 49040 | 9949218 | ✓ | | ✓ | ✓ | | | ✓ | ✓ | | |
| 3 | 49041 | 50700797 | ✓ | | ✓ | | | | ✓ | ✓ | | |
| 4 | 49042 | 50700779 | ✓ | | | ✓ | | | ✓ | ✓ | | |
| 5 | 49043 | 9949217 | ✓ | | ✓ | ✓ | | | ✓ | ✓ | | |

## FIAT STRADA 06/99→

| NR | MAPCO | REF | | | ← | → | ↑ | ↓ | | | NEW | INFO |
|---|---|---|---|---|---|---|---|---|---|---|---|---|
| 1 | **49017** | 46745364 | ✓ | | ✓ | ✓ | | | ✓ | ✓ | | M14x1,5RHT |
| 2 | **49018** | 46745365 | ✓ | | ✓ | ✓ | | | ✓ | ✓ | | M14x1,5RHT |
| 3 | **49038** | 46543045 | ✓ | | ✓ | ✓ | | | ✓ | ✓ | | → 07/2001 |
| 4 | **49036** | 46813842<br>46777742 | ✓ | | ✓ | | | | ✓ | ✓ | | 09/2002 → |
| 5 | **49037** | 46813841<br>46777741 | ✓ | | | ✓ | | | ✓ | ✓ | | 09/2002 → |
| 6 | **33018** | 46421522 | ✓ | | ✓ | ✓ | | ✓ | ✓ | ✓ | ✓ | |
| | | | | | | | | | | | | |
| | | | | | | | | | | | | |

# FIAT TIPO 07/87→04/95
# FIAT TEMPRA 03/90→08/97

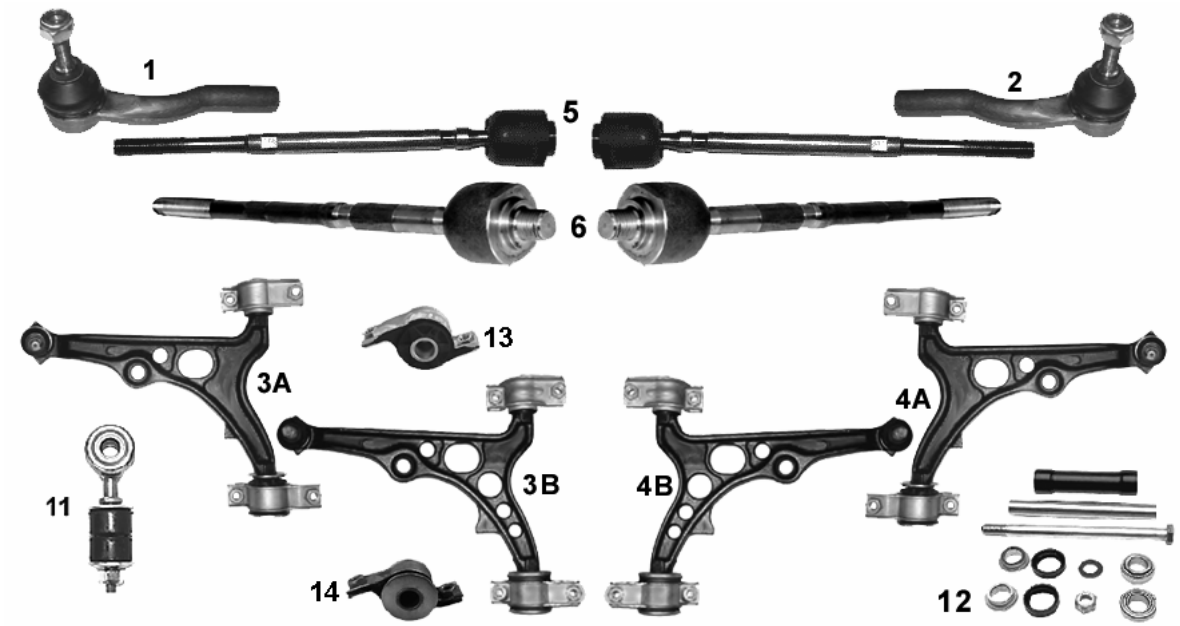


| NR | MAPCO | REF | | | ← | → | ↑ | ↓ | | | NEW | INFO |
|---|---|---|---|---|---|---|---|---|---|---|---|---|
| 1 | 19052 | 7591216 | ✓ | | ✓ | ✓ | | | ✓ | ✓ | | M12x1,5RHT |
| 2 | 19053 | 7591215 | ✓ | | ✓ | ✓ | | | ✓ | ✓ | | M12x1,5RHT |
| 3A | 19054 | 7601057 | ✓ | | ✓ | | | | ✓ | ✓ | | →06/90 Ø 15 mm |
| 3B | 19056 | 82461081 | ✓ | | ✓ | | | | ✓ | ✓ | | 07/90→ Ø 17 mm |
| 4A | 19055 | 76010373 | ✓ | | | ✓ | | | ✓ | ✓ | | →06/90 Ø 15 mm |
| 4B | 19057 | 82461082 | ✓ | | | ✓ | | | ✓ | ✓ | | 07/90→ Ø 17 mm |
| 5 | 19043 | 7633721 | ✓ | | ✓ | ✓ | | | | ✓ | | M12x1,5RHT |
| 6 | 19022 | 9941625 | ✓ | | ✓ | ✓ | | | ✓ | | | M12x1,5RHT |
| 7 | 19022/1 | | ✓ | | ✓ | ✓ | | | ✓ | | | **1 + 6** |
| 8 | 19022/2 | | ✓ | | ✓ | ✓ | | | ✓ | | | **2 + 6** |
| 9 | 19049/1 | | ✓ | | ✓ | ✓ | | | | ✓ | | **1 + 5** |
| 10 | 19049/2 | | ✓ | | ✓ | ✓ | | | | ✓ | | **2 + 5** |
| 11 | 33009 | 60809242S | ✓ | | ✓ | ✓ | | | ✓ | ✓ | | |
| 12 | 34054 | | | ✓ | ✓ | ✓ | | | ✓ | ✓ | | |
| 13 | 33019 | 7601065 | ✓ | | ✓ | ✓ | | | ✓ | ✓ | ✓ | |
| 14 | 33035 | 7601068 | ✓ | | ✓ | ✓ | | | ✓ | ✓ | ✓ | |
| | | | | | | | | | | | | |

## FIAT ULYSSE (220) 06/94→ 08/02
## FIAT SCUDO (220_) 02/96→

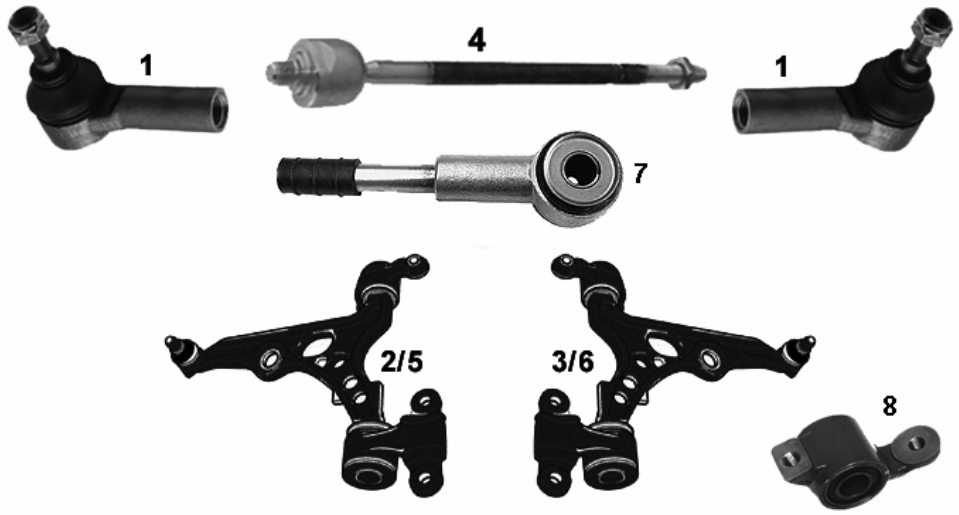


| NR | MAPCO | REF | | | ← | → | ↑ | ↓ | | | NEW | INFO |
|---|---|---|---|---|---|---|---|---|---|---|---|---|
| 1 | **19430** | 9404059080 | ✓ | | ✓ | ✓ | | | ✓ | ✓ | | M14x1,5RHT |
| 2 | **19431** | 1313083080 | ✓ | | ✓ | | | | ✓ | ✓ | | STOP 2.1TD |
| 3 | **19432** | 1313084080 | ✓ | | | ✓ | | | ✓ | ✓ | | STOP 2.1TD |
| 4 | **19023** | 9566950880 | ✓ | | ✓ | ✓ | | | ✓ | ✓ | | M14x1,5RHT |
| 5 | **19433** | 93500972 | ✓ | | ✓ | | | | ✓ | ✓ | | ✓ 2.1TD |
| 6 | **19434** | 93500973 | ✓ | | | ✓ | | | ✓ | ✓ | | ✓ 2.1TD |
| 7 | **19363** | 130866480 | ✓ | | ✓ | ✓ | | | ✓ | ✓ | | |
| 8 | **33017** | 1312317080 | ✓ | | ✓ | ✓ | | | ✓ | ✓ | | |

## FIAT ULYSSE (179AX) 08/02→

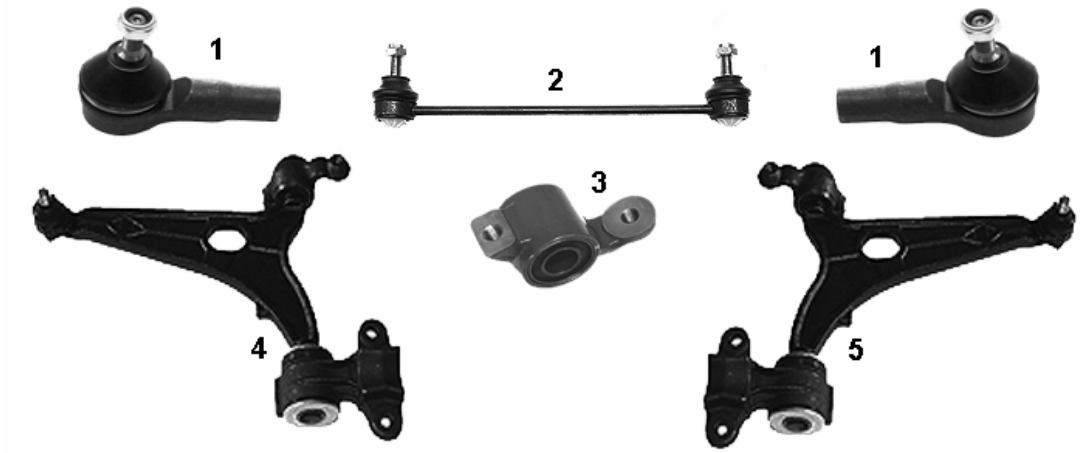


| NR | MAPCO | REF | | | ← | → | ↑ | ↓ | | | NEW | INFO |
|---|---|---|---|---|---|---|---|---|---|---|---|---|
| 1 | **19492** | 77362279 | ✓ | | ✓ | ✓ | | | ✓ | ✓ | | M14x1,5 |
| 2 | **19376HPS** | 508751 | ✓ | | ✓ | ✓ | | | ✓ | ✓ | | |
| 3 | **33017** | 1312317080 | ✓ | | ✓ | ✓ | | | ✓ | ✓ | | |
| 4 | **49082** | 3521H0 | ✓ | | ✓ | | | | ✓ | ✓ | ✓ | |
| 5 | **49083** | 3521H1 | ✓ | | | ✓ | | | ✓ | ✓ | ✓ | |

## FIAT UNO (146A/E) 1983→

| NR | MAPCO | REF | | | ← | → | ↑ | ↓ | | | NEW | INFO |
|---|---|---|---|---|---|---|---|---|---|---|---|---|
| 1 | 19047 | 5958246 | ✓ | | ✓ | ✓ | | | ✓ | ✓ | | M12x1,5RHT |
| 2 | 19044 | 4402649 | ✓ | | ✓ | ✓ | | | ✓ | ✓ | | |
| 3 | 19050 | 7705615 | ✓ | | ✓ | | | | ✓ | ✓ | | |
| 4 | 19051 | 7705616 | ✓ | | | ✓ | | | ✓ | ✓ | | |
| 5 | 19043 | 7633721 | ✓ | | ✓ | ✓ | | | | ✓ | | M12x1,5RHT |
| 6 | 33002 | 5927292 | ✓ | | ✓ | ✓ | | ✓ | ✓ | ✓ | | |
| 7 | 33003 | 5927293 | ✓ | | ✓ | ✓ | | ✓ | ✓ | ✓ | | |
| 8 | 19244 | | ✓ | | ✓ | ✓ | | ✓ | ✓ | ✓ | | Kit |

## FIAT UNO CS + FIORINO (147) 03/88→1992

| NR | MAPCO | REF | | | ← | → | ↑ | ↓ | | | NEW | INFO |
|---|---|---|---|---|---|---|---|---|---|---|---|---|
| 1 | 19070 | 7584628 | ✓ | | ✓ | ✓ | | | ✓ | ✓ | | M12x1,5RHT |
| 2 | 19025 | 4364095 | ✓ | | ✓ | ✓ | | | ✓ | ✓ | | →12/87 |
| 2 | 19071 | 7591277 | ✓ | | ✓ | ✓ | | | ✓ | ✓ | | 05/88→ 12/92 |

## FIAT UNO 03/99→

| NR | MAPCO | REF | | | ← | → | ↑ | ↓ | | | NEW | INFO |
|---|---|---|---|---|---|---|---|---|---|---|---|---|
| 1 | 19043 | 7076231 | ✓ | | ✓ | ✓ | | | ✓ | ✓ | | M12x1,5RHT |

# FORD

## FORD COURIER (F3L, F5L) 02/96→

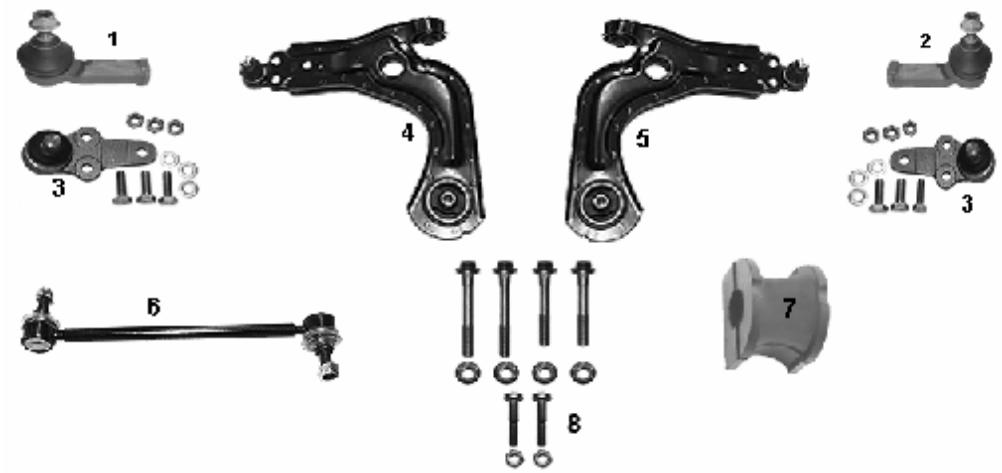


| NR | MAPCO | REF | | | ← | → | ↑ | ↓ | | | NEW | INFO |
|---|---|---|---|---|---|---|---|---|---|---|---|---|
| 1 | 19640 | 1011858 | ✓ | | ✓ | | | | ✓ | ✓ | | M14x1,5RHT |
| 2 | 19641 | 1011857 | ✓ | | | ✓ | | | ✓ | ✓ | | M14x1,5RHT |
| 3 | 19763 | 5021410 | ✓ | | ✓ | ✓ | | | ✓ | ✓ | | 16,5 mm |
| 4 | 19656 | 1020221 | ✓ | | ✓ | | | | ✓ | ✓ | | |
| 5 | 19657 | 1020219 | ✓ | | | ✓ | | | ✓ | ✓ | | |
| 6 | 19608HPS | 1004018 | ✓ | | ✓ | ✓ | | | ✓ | ✓ | | 238 mm |
| 7 | 33670 | 1102771 | ✓ | | ✓ | ✓ | | | ✓ | ✓ | | |
| 8 | 95642 | | ✓ | | ✓ | ✓ | | | ✓ | ✓ | | MS |

## FORD ESCORT II 03/73→ 08/80

| NR | MAPCO | REF | | | ← | → | ↑ | ↓ | | | NEW | INFO |
|---|---|---|---|---|---|---|---|---|---|---|---|---|
| 1 | 19727 | 6128814 | ✓ | | ✓ | ✓ | | | ✓ | ✓ | | ½ x 20 UNF RHT 1 |

## FORD ESCORT III 06/83→12/85
## FORD ORION I 07/83→03/86

| NR | MAPCO | REF | | | ← | → | ↑ | ↓ | | | NEW | INFO |
|---|---|---|---|---|---|---|---|---|---|---|---|---|
| 1 | 19727 | 6128814 | ✓ | | ✓ | ✓ | | | ✓ | ✓ | | ½ x 20 UNF RHT |
| 2 | 19723 | 6127726 | ✓ | | ✓ | ✓ | | | ✓ | ✓ | | ½“ x 20 RHT-M14x1,5 |
| 3 | 19723/1 | | ✓ | | ✓ | ✓ | | | ✓ | ✓ | | 1 + 4 |
| 4 | 33611 | 6107025 | ✓ | | ✓ | ✓ | | | ✓ | ✓ | | |
| 5 | 33610 | 6087890 | ✓ | | ✓ | ✓ | | | ✓ | ✓ | | |

## FORD ESCORT IV
## FORD ORION II

01/86→10/90

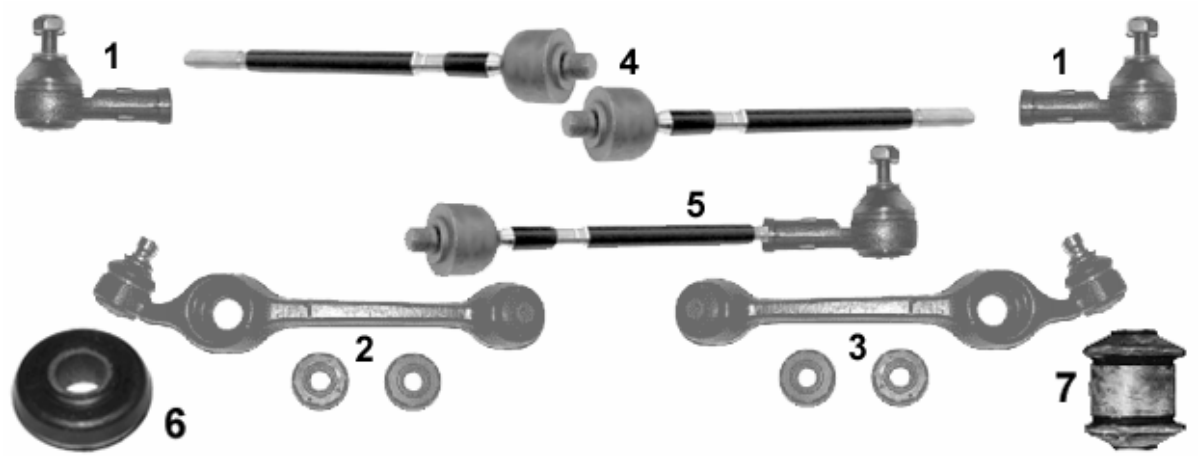


| NR | MAPCO | REF | | | ← | → | ↑ | ↓ | | | NEW | INFO |
|---|---|---|---|---|---|---|---|---|---|---|---|---|
| 1 | **19727** | 6128814 | ✓ | | ✓ | ✓ | | | ✓ | ✓ | | ½ x 20 UNF RHT |
| 2 | **19743/1** | 1637184 | ✓ | | ✓ | | | | ✓ | ✓ | | 03/86→11/90 |
| 3 | **19744/1** | 1637183 | ✓ | | | ✓ | | | ✓ | ✓ | | 03/86→11/90 |
| 4 | **19723** | 6127726 | ✓ | | ✓ | ✓ | | | ✓ | ✓ | | ½“ x 20 RHT-M14x1,5 |
| 5 | **19723/1** | | ✓ | | ✓ | ✓ | | | ✓ | ✓ | | **1 + 4** |
| 6 | **33611** | 6107025 | ✓ | | ✓ | ✓ | | | ✓ | ✓ | | |
| 7 | **33609** | 1619120 | ✓ | | ✓ | ✓ | | | ✓ | ✓ | | |

## FORD ESCORT V, VI 07/90→01/95
## FORD ORION III 07/90→12/93

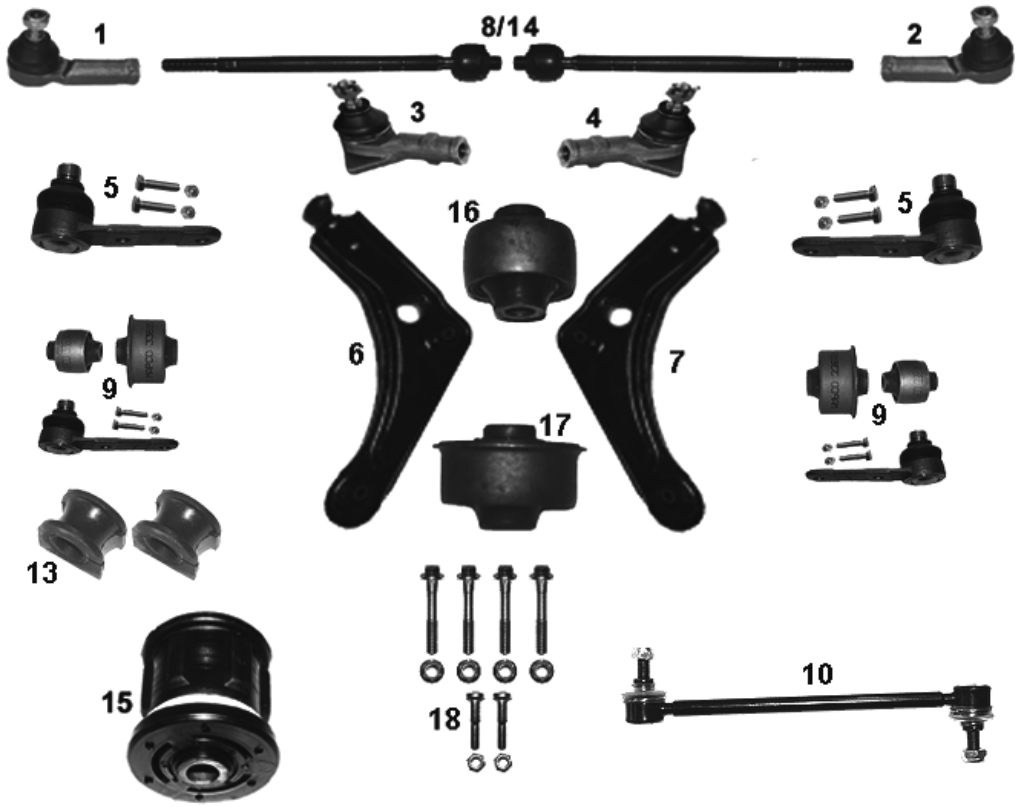


| NR | MAPCO | REF | | | ← | → | ↑ | ↓ | | | NEW | INFO |
|---|---|---|---|---|---|---|---|---|---|---|---|---|
| 1 | 19752 | 6555938 | ✓ | | ✓ | | | | ✓ | ✓ | | 2000RS M14x2,0RHT |
| 2 | 19753 | 6555936 | ✓ | | | ✓ | | | ✓ | ✓ | | 2000RS M14x2,0RHT |
| 3 | 19735 | 6120232 | ✓ | | ✓ | | | | ✓ | ✓ | | ✓ 2000RS M14x2,0RHT |
| 4 | 19736 | 6120231 | ✓ | | | ✓ | | | ✓ | ✓ | | ✓ 2000RS M14x2,0RHT |
| 5 | 19754 | 6525844 | ✓ | | ✓ | ✓ | | | ✓ | ✓ | | |
| 6 | 19760 | 7351748 | ✓ | | ✓ | | | | ✓ | ✓ | | |
| 7 | 19761 | 7351747 | ✓ | | | ✓ | | | ✓ | ✓ | | |
| 8 | 19724 | 6180350 | ✓ | | ✓ | ✓ | | | | ✓ | | M14x2,0RHT |
| 9 | 19254 | | ✓ | | ✓ | ✓ | | | ✓ | ✓ | | Kit |
| 10 | 19604HPS | 1661237 | ✓ | | ✓ | ✓ | | | ✓ | ✓ | | |
| 11 | 19724/1 | | ✓ | | ✓ | | | | ✓ | ✓ | | **1 + 8** |
| 12 | 19724/2 | | ✓ | | | ✓ | | | ✓ | ✓ | | **2 + 8** |
| 13 | 33628/2 | (7102392) | ✓ | | ✓ | ✓ | | | ✓ | ✓ | | **Kit 2 x 33628** |
| 14 | 49737 | 6197238 | ✓ | | ✓ | ✓ | | | ✓ | | | |
| 15 | 33642 | 1041979 | | ✓ | ✓ | ✓ | | | ✓ | ✓ | | |
| 16 | 33614 | 1000445 | ✓ | | ✓ | ✓ | | | ✓ | ✓ | | |
| 17 | 33615 | 1035929 | ✓ | | ✓ | ✓ | | | ✓ | ✓ | | |
| 18 | 95760 | | ✓ | | ✓ | ✓ | | | ✓ | ✓ | | MS |

## FORD ESCORT VII 01/95→10/98

| NR | MAPCO | REF | | | ← | → | ↑ | ↓ | | | NEW | INFO |
|---|---|---|---|---|---|---|---|---|---|---|---|---|
| 1 | 19752 | 6555938 | ✓ | | ✓ | | | | ✓ | ✓ | | M14x2,0RHT |
| 2 | 19753 | 6555936 | ✓ | | | ✓ | | | ✓ | ✓ | | M14x2,0RHT |
| 3 | 19608HPS | 1661237 | ✓ | | ✓ | ✓ | | | ✓ | ✓ | | 238 mm |
| 4 | 19760 | 7351748 | ✓ | | ✓ | | | | ✓ | ✓ | | |
| 5 | 19761 | 7351747 | ✓ | | | ✓ | | | ✓ | ✓ | | |
| 6 | 49737 | 6197238 | ✓ | | ✓ | ✓ | | | ✓ | | | |
| 7 | 33642 | 1041979 | | ✓ | ✓ | ✓ | | | ✓ | ✓ | | |
| 8 | 33614 | 1000445 | ✓ | | ✓ | ✓ | | | ✓ | ✓ | | |
| 9 | 33615 | 1035929 | ✓ | | ✓ | ✓ | | | ✓ | ✓ | | |
| 10 | 95760 | | ✓ | | ✓ | ✓ | | | ✓ | ✓ | | MS |

## FORD FIESTA I + FIESTA II (FBD) 05/76→ 11/89

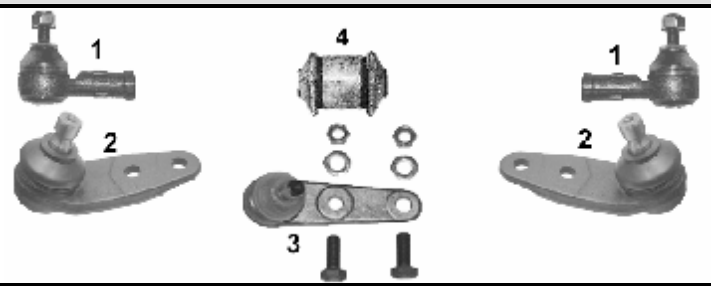


| NR | MAPCO | REF | | | ← | → | ↑ | ↓ | | | NEW | INFO |
|---|---|---|---|---|---|---|---|---|---|---|---|---|
| 1 | 19727 | 6128814 | ✓ | | ✓ | ✓ | | | ✓ | ✓ | | 10/83→ ½“ x 20UNF RHT |
| 2 | 19721 | 6111394 | ✓ | | ✓ | ✓ | | | ✓ | ✓ | | →09/83 |
| 3 | 19725 | 6130560 | ✓ | | ✓ | ✓ | | | ✓ | ✓ | | 10/83→ |
| 4 | 33609 | 1619120 | ✓ | | ✓ | ✓ | | | ✓ | ✓ | | Innen / inner |

## FORD FIESTA III (GFJ) 01/89 → 08/96
## FORD FIESTA COURIER 02/94 → 07/96

| NR | MAPCO | REF | | | ← | → | ↑ | ↓ | | | NEW | INFO |
|---|---|---|---|---|---|---|---|---|---|---|---|---|
| 1 | 33600 | | ✓ | | ✓ | ✓ | | | ✓ | ✓ | | 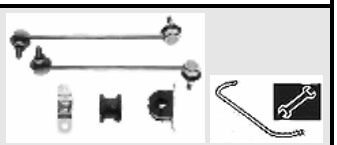 |
| 2 | 33601 | | ✓ | | ✓ | ✓ | | | ✓ | ✓ | | |

## FORD FIESTA III (GFJ) 01/89→12/93
## FORD FIESTA COURIER 07/91→12/93

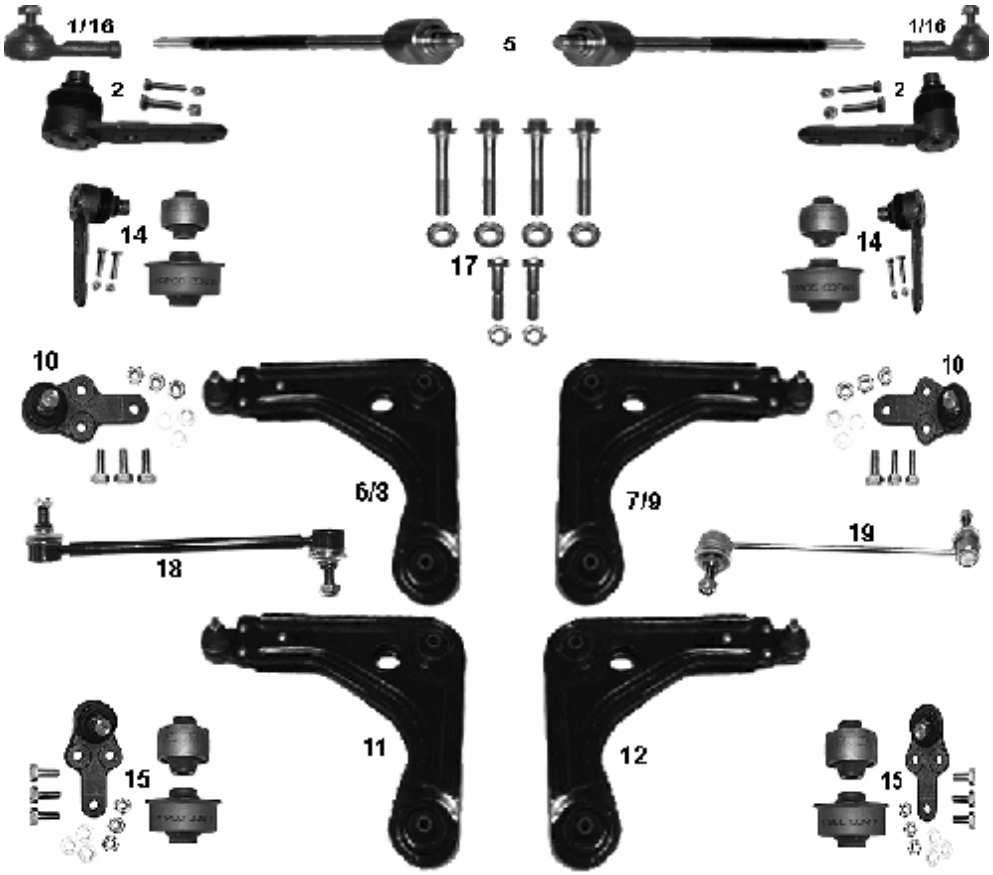


| NR | MAPCO | REF | | | ← | → | ↑ | ↓ | | | NEW | INFO |
|---|---|---|---|---|---|---|---|---|---|---|---|---|
| 1 | 19727 | 6128814 | ✓ | | ✓ | ✓ | | | ✓ | ✓ | | ½" x 20UNF RHT |
| 2 | 19754 | 1047853 | ✓ | | ✓ | ✓ | | | ✓ | ✓ | | |
| 5 | 19722 | 1659374 | ✓ | | ✓ | ✓ | | | ✓ | ✓ | | ½ x 20 UNF |
| 6 | 19755/1 | 7152281 | ✓ | | ✓ | | | | ✓ | ✓ | | 01/89→12/93 |
| 7 | 19756/1 | 7152278 | ✓ | | | ✓ | | | ✓ | ✓ | | 01/89→12/93 |
| 8 | 19755/4 | 7152280 | ✓ | | ✓ | | | | ✓ | ✓ | | ✓ 1.8 16V |
| 9 | 19756/4 | 7152277 | ✓ | | | ✓ | | | ✓ | ✓ | | ✓ 1.8 16V |
| 10 | 19765 | 1047798 | ✓ | | ✓ | ✓ | | | ✓ | ✓ | | Ø 17 mm |
| 11 | 19755/5 | 7152276 | ✓ | | ✓ | | | | ✓ | ✓ | | ✓ XR2 Turbo 10/90→03/92 |
| 12 | 19756/5 | 7152279 | ✓ | | | ✓ | | | ✓ | ✓ | | ✓ XR2 Turbo 10/90→03/92 |
| 13 | 19722/1 | | ✓ | | ✓ | ✓ | | | ✓ | ✓ | | **1 + 5** |
| 14 | 19254 | | ✓ | | ✓ | ✓ | | | ✓ | ✓ | | Kit |
| 15 | 19265 | | ✓ | | ✓ | ✓ | | | ✓ | ✓ | | Kit |
| 16 | 19646 | 6969518 | ✓ | | ✓ | ✓ | | | ✓ | ✓ | | ✓ TURBO - XR2, 1.8D - 1.8TD |
| 17 | 95760 | | ✓ | | ✓ | ✓ | | | ✓ | ✓ | | MS |
| 18 | 19604HPS | 1061631 | ✓ | | ✓ | ✓ | | | ✓ | ✓ | | Stahl/steel 238 mm |
| 19 | 51604 | 1666243 | ✓ | | ✓ | ✓ | | | ✓ | ✓ | ✓ | ✓1.8 TD 03/93 → 261 mm |
| | | | | | | | | | | | | |

## FORD FIESTA III (GFJ) 01/94→12/95
## FORD FIESTA COURIER 01/94→12/95

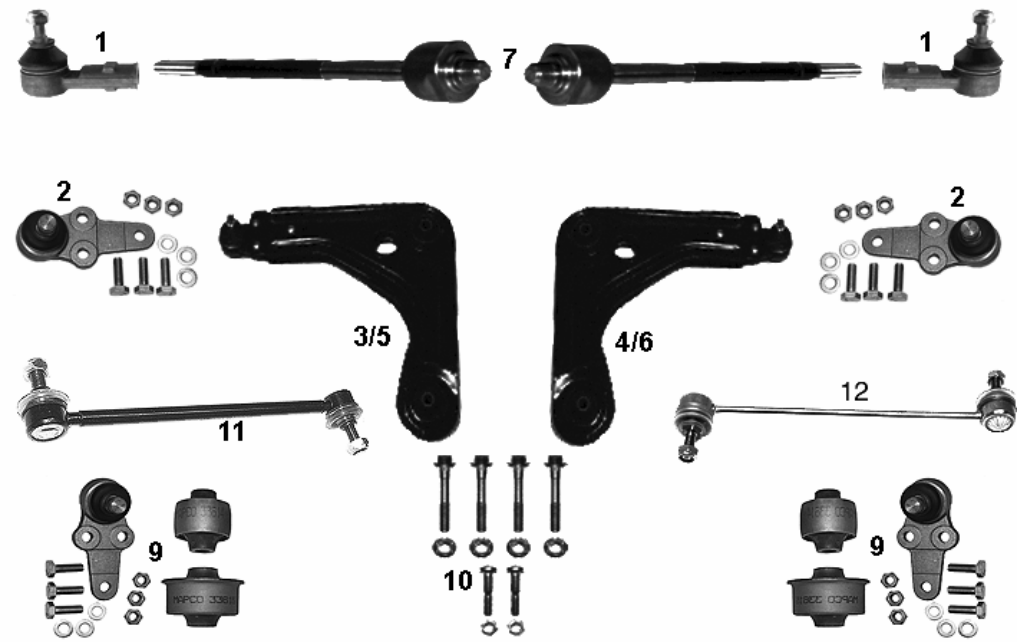


| NR | MAPCO | REF | | | ← | → | ↑ | ↓ | | | NEW | INFO |
|---|---|---|---|---|---|---|---|---|---|---|---|---|
| 1 | **19646** | 6969518 | ✓ | | ✓ | ✓ | | | ✓ | ✓ | | 13,5 mm ½ X 20 UNF RHT |
| 2 | **19763** | 1047797 | ✓ | | ✓ | ✓ | | | ✓ | ✓ | | 16,5 mm |
| 3 | **19755/2** | 7152271 | ✓ | | ✓ | | | | | ✓ | | |
| 4 | **19756/2** | 7152269 | ✓ | | | ✓ | | | | ✓ | | |
| 5 | **19755/3** | 7152272 | ✓ | | ✓ | | | | ✓ | | | |
| 6 | **19756/3** | 7152270 | ✓ | | | ✓ | | | ✓ | | | |
| 7 | **19722** | 1659374 | ✓ | | ✓ | ✓ | | | ✓ | ✓ | | ½ x 20 UNF RHT |
| 8 | **19722/1** | | ✓ | | ✓ | ✓ | | | ✓ | ✓ | | **1 + 7** |
| 9 | **19263** | | ✓ | | ✓ | ✓ | | | ✓ | ✓ | | Kit |
| 10 | **95760** | | ✓ | | ✓ | ✓ | | | ✓ | ✓ | | MS |
| 11 | **19604HPS** | 1061631 | ✓ | | ✓ | ✓ | | | ✓ | ✓ | | Stahl/steel 238 mm |
| 12 | **51604** | 1666243 | ✓ | | ✓ | ✓ | | | ✓ | ✓ | ✓ | ✓1.8 TD 261 mm |

## FORD FIESTA IV (JA_, JB_) 08/95→01/02

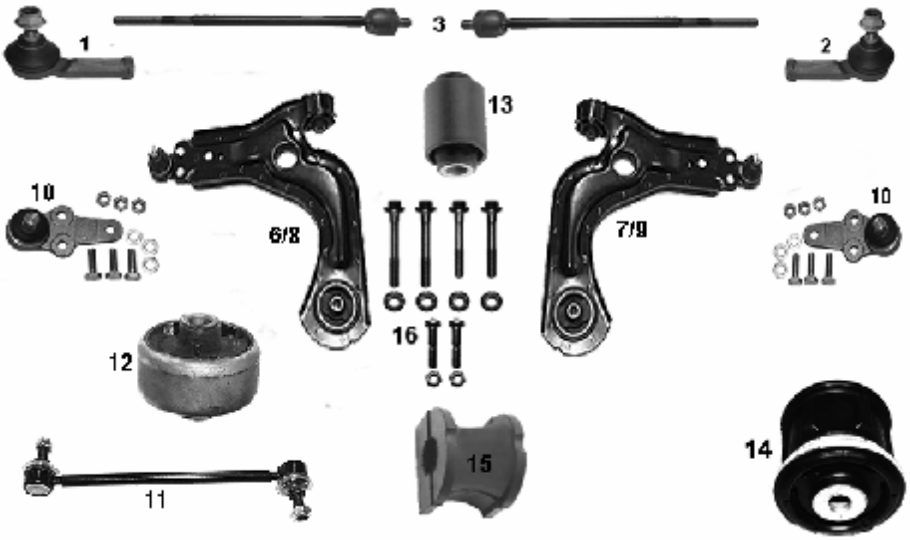


| NR | MAPCO | REF | | | ← | → | ↑ | ↓ | | | NEW | INFO |
|---|---|---|---|---|---|---|---|---|---|---|---|---|
| 1 | 19640 | 1011858 | ✓ | | ✓ | | | | ✓ | ✓ | | M16x1,5RHT |
| 2 | 19641 | 1011857 | ✓ | | | ✓ | | | ✓ | ✓ | | M16x1,5RHT |
| 3 | 19644 | 1044014 | ✓ | | ✓ | ✓ | | | ✓ | ✓ | | L=213 mm |
| 4 | 19644/1 | | ✓ | | ✓ | | | | ✓ | ✓ | | 3+1 |
| 5 | 19644/2 | | ✓ | | | ✓ | | | ✓ | ✓ | | 3+2 |
| 6 | 19642 | 1020220 | ✓ | | ✓ | | | | | ✓ | | Courier |
| 7 | 19643 | 1020214 | ✓ | | | ✓ | | | | ✓ | | Courier |
| 8 | 19642/1 | 1021220 | ✓ | | ✓ | | | | ✓ | | | Courier |
| 9 | 19643/1 | 1021219 | ✓ | | | ✓ | | | ✓ | | | Courier |
| 10 | 19763 | 5021410 | ✓ | | ✓ | ✓ | | | ✓ | ✓ | | 16,5 mm |
| 11 | 19608HPS | 1004018 | ✓ | | ✓ | ✓ | | | ✓ | ✓ | | 238 mm |
| 12 | 33635 | 1063372 | ✓ | | ✓ | ✓ | | | ✓ | ✓ | | |
| 13 | 33636 | 1055191 | ✓ | | ✓ | ✓ | | | ✓ | ✓ | | |
| 14 | 33643 | 7371059 | | ✓ | ✓ | ✓ | | | ✓ | ✓ | | |
| 15 | 33670 | 1102771 | ✓ | | ✓ | ✓ | | | ✓ | ✓ | | Ø 15mm |
| 16 | 95642 | | ✓ | | ✓ | ✓ | | | ✓ | ✓ | ✓ | MS |

## FORD FIESTA V (JH_) 11/01→

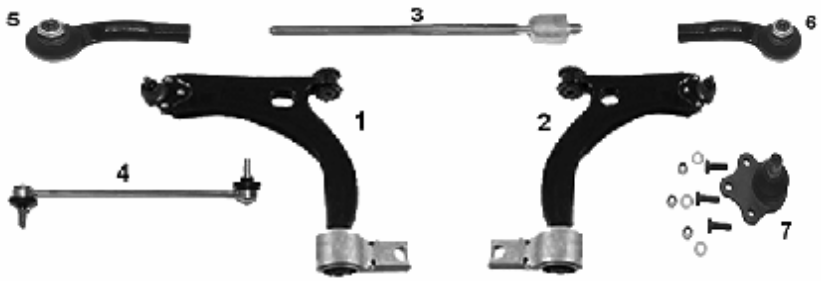


| NR | MAPCO | REF | | | ← | → | ↑ | ↓ | | | NEW | INFO |
|---|---|---|---|---|---|---|---|---|---|---|---|---|
| 1 | 59650 | 1146131 | ✓ | | ✓ | | | | ✓ | ✓ | | |
| 2 | 59651 | 1146130 | ✓ | | | ✓ | | | ✓ | ✓ | | |
| 3 | 59663 | 4472940 | ✓ | | ✓ | ✓ | | | ✓ | ✓ | | M14X1,5 |
| 4 | 19774 | 1146150 | ✓ | | ✓ | ✓ | | | ✓ | ✓ | | |
| 5 | 59669 | 1202549 | ✓ | | ✓ | | | | ✓ | ✓ | | M12x1,5 |
| 6 | 59670 | 1202548 | ✓ | | | ✓ | | | ✓ | ✓ | | M12x1,5 |
| 7 | 59671 | 2S613395AB | ✓ | | ✓ | ✓ | | | ✓ | ✓ | | Ø 16,5mm |

## FORD FOCUS (D_ _) 10/98→11/04

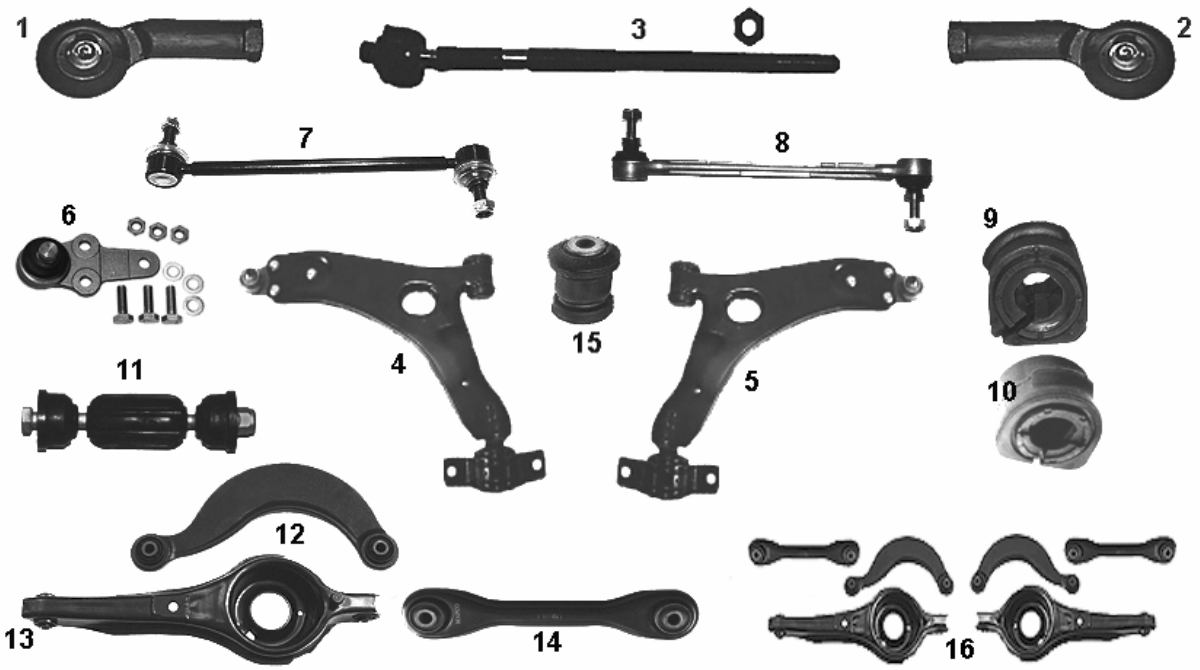


| NR | MAPCO | REF | | | ← | → | ↑ | ↓ | | | NEW | INFO |
|---|---|---|---|---|---|---|---|---|---|---|---|---|
| 1 | 19648 | 1074306 | ✓ | | ✓ | | | | ✓ | ✓ | | M14 x 2,0 RHT |
| 2 | 19649 | 1074305 | ✓ | | | ✓ | | | ✓ | ✓ | | M14 x 2,0 RHT |
| 3 | 19650 | 3707333 | ✓ | | ✓ | ✓ | | | ✓ | ✓ | | |
| 4 | 19651 | 1207974 | ✓ | | ✓ | | | | ✓ | ✓ | | |
| 5 | 19652 | 1073214 | ✓ | | | ✓ | | | ✓ | ✓ | | |
| 6 | 19653 | 1212810 | ✓ | | ✓ | ✓ | | | ✓ | ✓ | | 17,5 mm |
| 7 | 19608HPS | 1661237 | ✓ | | ✓ | ✓ | | | ✓ | ✓ | | Stahl/steel 238 mm |
| 8 | 19609 | 1107068 | ✓ | | ✓ | ✓ | | | ✓ | ✓ | | Aluminium 238 mm |
| 9 | 33644 | 1073217 | ✓ | | ✓ | ✓ | | | ✓ | ✓ | | |
| 10 | 33671 | 1073249 | | ✓ | ✓ | ✓ | | | ✓ | ✓ | | |
| 11 | 59648 | 1061702 | | ✓ | ✓ | ✓ | | | ✓ | ✓ | | |
| 12 | 59646 | 1061659 | | ✓ | ✓ | ✓ | | | ✓ | ✓ | | |
| 13 | 59647 | 1064128 | | ✓ | ✓ | ✓ | | | ✓ | ✓ | | |
| 14 | 59668 | 1061668 | | ✓ | ✓ | ✓ | | | ✓ | ✓ | | 1998→ 10/04 |
| 15 | 33676 | 1061570 | ✓ | | ✓ | ✓ | | ✓ | ✓ | ✓ | | Ø 35,0 mm |
| 16 | 53612 | | | ✓ | ✓ | ✓ | | | ✓ | ✓ | ✓ | axle Kit |

## FORD FOCUS II 11/04→

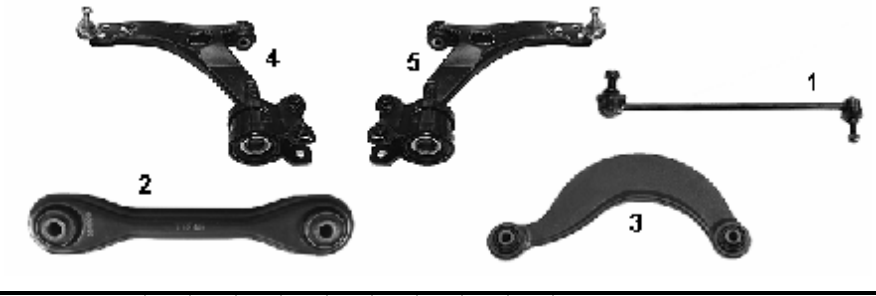


| NR | MAPCO | REF | | | ← | → | ↑ | ↓ | | | NEW | INFO |
|---|---|---|---|---|---|---|---|---|---|---|---|---|
| 1 | 59664 | 1230909 | ✓ | | ✓ | | | | ✓ | ✓ | | |
| 2 | 59668 | 1061668 | | ✓ | ✓ | ✓ | | | ✓ | ✓ | | |
| 3 | 59646 | 1061659 | | ✓ | ✓ | ✓ | | | ✓ | ✓ | | |
| 4 | 51602 | 1332075 | ✓ | | ✓ | | | ✓ | ✓ | ✓ | ✓ | |
| 5 | 51603 | 1332074 | ✓ | | | ✓ | | ✓ | ✓ | ✓ | ✓ | |

## FORD FOCUS C- MAX 10/03→

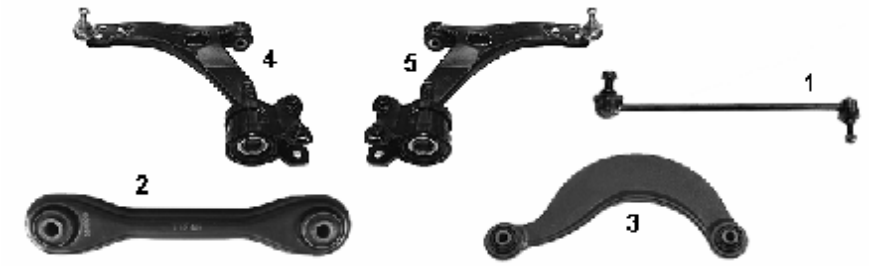


| NR | MAPCO | REF | | | ← | → | ↑ | ↓ | | | NEW | INFO |
|---|---|---|---|---|---|---|---|---|---|---|---|---|
| 1 | 59664 | 1230909 | ✓ | | ✓ | | | | ✓ | ✓ | | |
| 2 | 59668 | 1061668 | | ✓ | ✓ | ✓ | | | ✓ | ✓ | | |
| 3 | 59646 | 1061659 | | ✓ | ✓ | ✓ | | | ✓ | ✓ | | |
| 4 | 51602 | 1332075 | ✓ | | ✓ | | | ✓ | ✓ | ✓ | ✓ | |
| 5 | 51603 | 1332074 | ✓ | | | ✓ | | ✓ | ✓ | ✓ | ✓ | |

## FORD FUSION (JU_) 08/02→

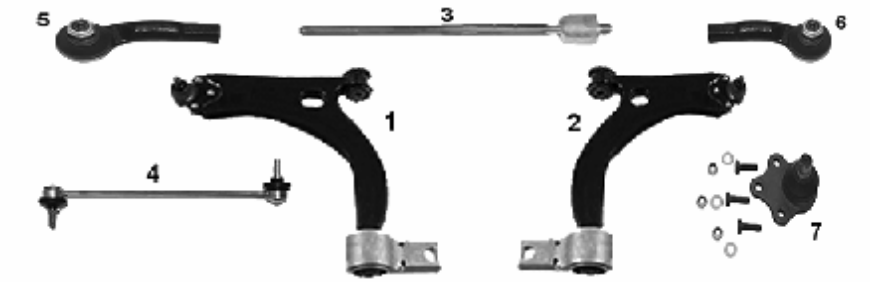


| NR | MAPCO | REF | | | ← | → | ↑ | ↓ | | | NEW | INFO |
|---|---|---|---|---|---|---|---|---|---|---|---|---|
| 1 | 59659 | 1214912 | ✓ | | ✓ | | | | ✓ | ✓ | | |
| 2 | 59660 | 1214911 | ✓ | | | ✓ | | | ✓ | ✓ | | |
| 3 | 59663 | 4472940 | ✓ | | ✓ | ✓ | | | ✓ | ✓ | | M14X1,5 |
| 4 | 19774 | 1146150 | ✓ | | ✓ | ✓ | | | ✓ | ✓ | | |
| 5 | 59669 | 1202549 | ✓ | | ✓ | | | | ✓ | ✓ | ✓ | M12x1,5 |
| 6 | 59670 | 1202548 | ✓ | | | ✓ | | | ✓ | ✓ | ✓ | M12x1,5 |
| 7 | 59671 | 2S613395AB | ✓ | | ✓ | ✓ | | | ✓ | ✓ | ✓ | Ø 16,5mm |

## FORD GALAXY (VX, VY) 03/95→

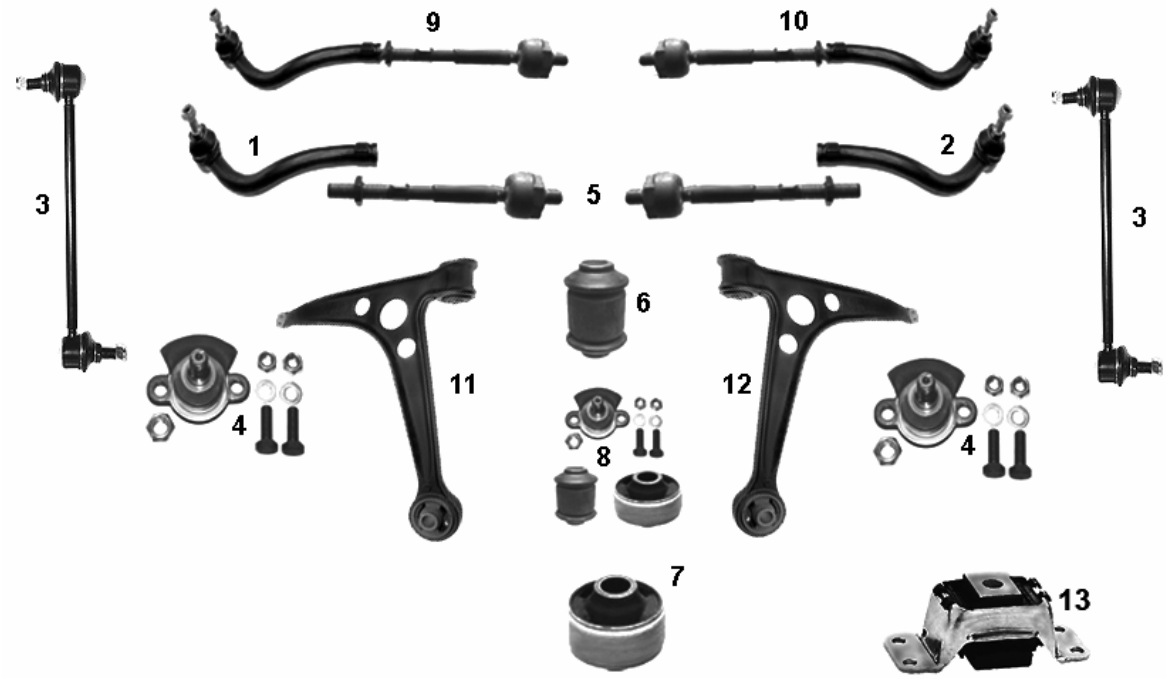


| NR | MAPCO | REF | | | ← | → | ↑ | ↓ | | | NEW | INFO |
|---|---|---|---|---|---|---|---|---|---|---|---|---|
| 1 | 49857 | 1058380 | ✓ | | ✓ | | | | ✓ | ✓ | | M14x1,5 RHT |
| 2 | 49858 | 1058378 | ✓ | | | ✓ | | | ✓ | ✓ | | M14x1,5 RHT |
| 3 | 49856HPS | 1009591 | ✓ | | ✓ | ✓ | | | ✓ | ✓ | | |
| 4 | 49861 | 7200946 | ✓ | | ✓ | ✓ | | | ✓ | ✓ | | |
| 5 | 49866 | 1092382 | ✓ | | ✓ | ✓ | | | ✓ | ✓ | | |
| 6 | 33908 | 95VW5A638CA | ✓ | | ✓ | ✓ | | | ✓ | ✓ | | |
| 7 | 33928 | 7M0407181A | ✓ | | ✓ | ✓ | | | ✓ | ✓ | | |
| 8 | 19266 | | ✓ | | ✓ | ✓ | | | ✓ | ✓ | | Kit |
| 9 | 49866/1 | 1020497 | ✓ | | ✓ | | | | ✓ | ✓ | | |
| 10 | 49866/2 | 1020496 | ✓ | | | ✓ | | | ✓ | ✓ | | |
| 11 | 49876 | 1007602 | ✓ | | ✓ | | | | ✓ | ✓ | | |
| 12 | 49877 | 1012632 | ✓ | | | ✓ | | | ✓ | ✓ | | |
| 13 | 33864 | 7403748 | | ✓ | ✓ | ✓ | | | ✓ | ✓ | ✓ | |

## FORD KA (RB_) 09/96→

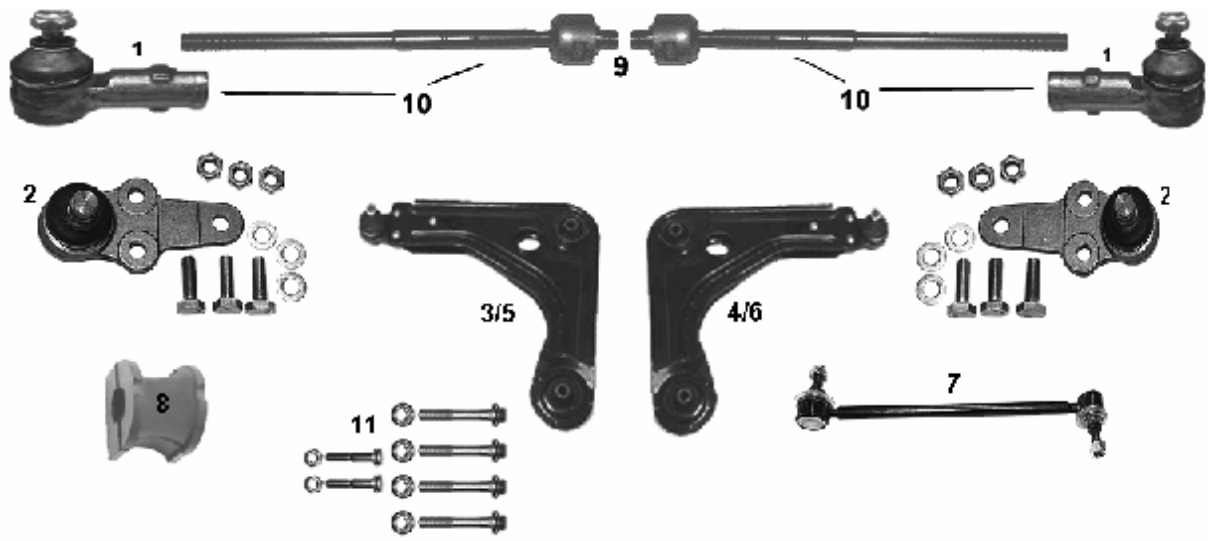


| NR | MAPCO | REF | | | ← | → | ↑ | ↓ | | | NEW | INFO |
|---|---|---|---|---|---|---|---|---|---|---|---|---|
| 1 | **19645** | 1034417 | ✓ | | ✓ | | | | ✓ | ✓ | | ½ x20 UNF RHT |
| 2 | **19763** | 1047797 | ✓ | | | ✓ | | | | ✓ | | Ø 16,5 mm |
| 3 | **19701** | 1032101 | ✓ | | ✓ | | | | ✓ | | | |
| 4 | **19702** | 1046444 | ✓ | | ✓ | ✓ | | | ✓ | | | |
| 5 | **19701/1** | 1032102 | ✓ | | ✓ | | | | | ✓ | | |
| 6 | **19702/1** | 1046445 | ✓ | | | ✓ | | | | ✓ | | |
| 7 | **19608HPS** | 1004018 | ✓ | | ✓ | ✓ | | | ✓ | ✓ | | 238 mm |
| 8 | **33670** | 1102771 | ✓ | | ✓ | ✓ | | | ✓ | ✓ | | |
| 9 | **19722** | 6790700 | ✓ | | ✓ | ✓ | | | ✓ | ✓ | | |
| 10 | **19722/2** | | ✓ | | ✓ | ✓ | | | ✓ | ✓ | | **1 + 9** |
| 11 | **95760** | | ✓ | | ✓ | ✓ | | | ✓ | ✓ | | MS |

## FORD MAVERICK 02/93→04/98

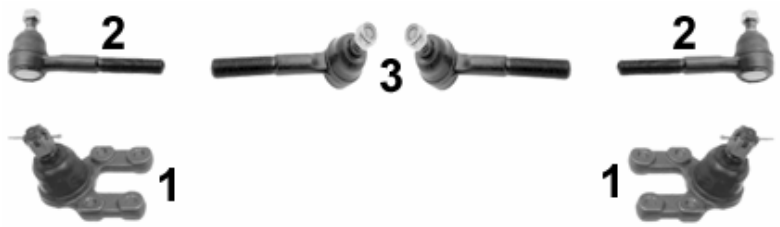


| NR | MAPCO | REF | | | ← | → | ↑ | ↓ | | | NEW | INFO |
|---|---|---|---|---|---|---|---|---|---|---|---|---|
| 1 | **59520** | 40160-50W00 | ✓ | | ✓ | ✓ | | | ✓ | ✓ | | |
| 2 | **59529** | 48520-61G25 | ✓ | | ✓ | ✓ | | | ✓ | ✓ | | aussen / outside |
| 3 | **59528** | 48570-61G25 | ✓ | | ✓ | ✓ | | | ✓ | ✓ | | Innen / inner |

## FORD MONDEO I 01/93→08/96

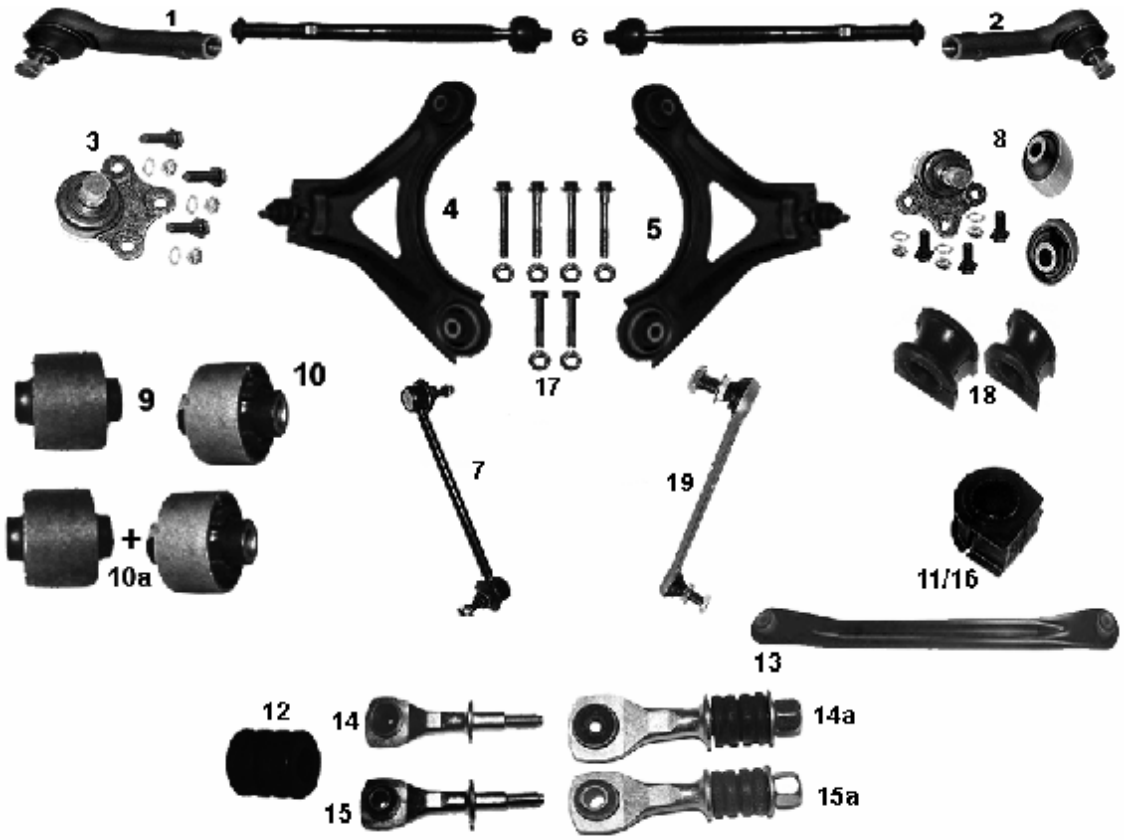


| NR | MAPCO | REF | | | ← | → | ↑ | ↓ | | | NEW | INFO |
|---|---|---|---|---|---|---|---|---|---|---|---|---|
| 1 | 19757 | 5027451 | ✓ | | ✓ | | | | ✓ | ✓ | | M16x1,5RHT |
| 2 | 19758 | 5027452 | ✓ | | | ✓ | | | ✓ | ✓ | | M16x1,5RHT |
| 3 | 19759 | 93BB3395AC | ✓ | | ✓ | ✓ | | | ✓ | ✓ | | |
| 4 | 19768 | 6954471 | ✓ | | ✓ | | | | ✓ | ✓ | | |
| 5 | 19769 | 6954470 | ✓ | | | ✓ | | | ✓ | ✓ | | |
| 6 | 19647 | 6737692 | ✓ | | ✓ | ✓ | | | ✓ | ✓ | | M16x1,5RHT |
| 7 | 19605HPS | 6960036 | ✓ | | ✓ | ✓ | | | ✓ | ✓ | | 237mm |
| 8 | 19259 | | ✓ | | ✓ | ✓ | | | ✓ | ✓ | | Kit |
| 9 | 33616 | 6790115 | ✓ | | ✓ | ✓ | | | ✓ | ✓ | | |
| 10 | 33617 | 6870549 | ✓ | | ✓ | ✓ | | | ✓ | ✓ | | |
| 10a | 33616/7 | | ✓ | | ✓ | ✓ | | | ✓ | ✓ | | Kit 33616 + 33617 |
| 11 | 33631 | 7144204 | | ✓ | ✓ | ✓ | | | ✓ | ✓ | | |
| 12 | 33634 | 6915411 | | ✓ | ✓ | ✓ | | | ✓ | ✓ | | |
| 13 | 19658 | 6867577 | | ✓ | ✓ | ✓ | | | ✓ | ✓ | | |
| 14 | 33633 | 7014210 | | ✓ | ✓ | ✓ | | | ✓ | ✓ | | 01/93→10/94 |
| 14a | 33633/1 | 7014210 | | ✓ | ✓ | ✓ | | | ✓ | ✓ | | 01/93→10/94 |
| 15 | 33632 | 1054209 | | ✓ | ✓ | ✓ | | | ✓ | ✓ | | 11/94→ 08/96 |
| 15a | 33632/1 | 1054209 | | ✓ | ✓ | ✓ | | | ✓ | ✓ | | 11/94→ 08/96 |
| 16 | 33630 | 7144202 | | ✓ | ✓ | ✓ | | | ✓ | ✓ | | |
| 17 | 95768 | | ✓ | | ✓ | ✓ | | | ✓ | ✓ | | MS |
| 18 | 33629/2 | 6 714 194 | ✓ | | ✓ | ✓ | | | ✓ | ✓ | | Ø 19mm |
| 19 | 19601 | 1106269 | ✓ | | ✓ | ✓ | | | ✓ | ✓ | | 238,0 mm Aluminium |

## FORD MONDEO II 09/96→11/00

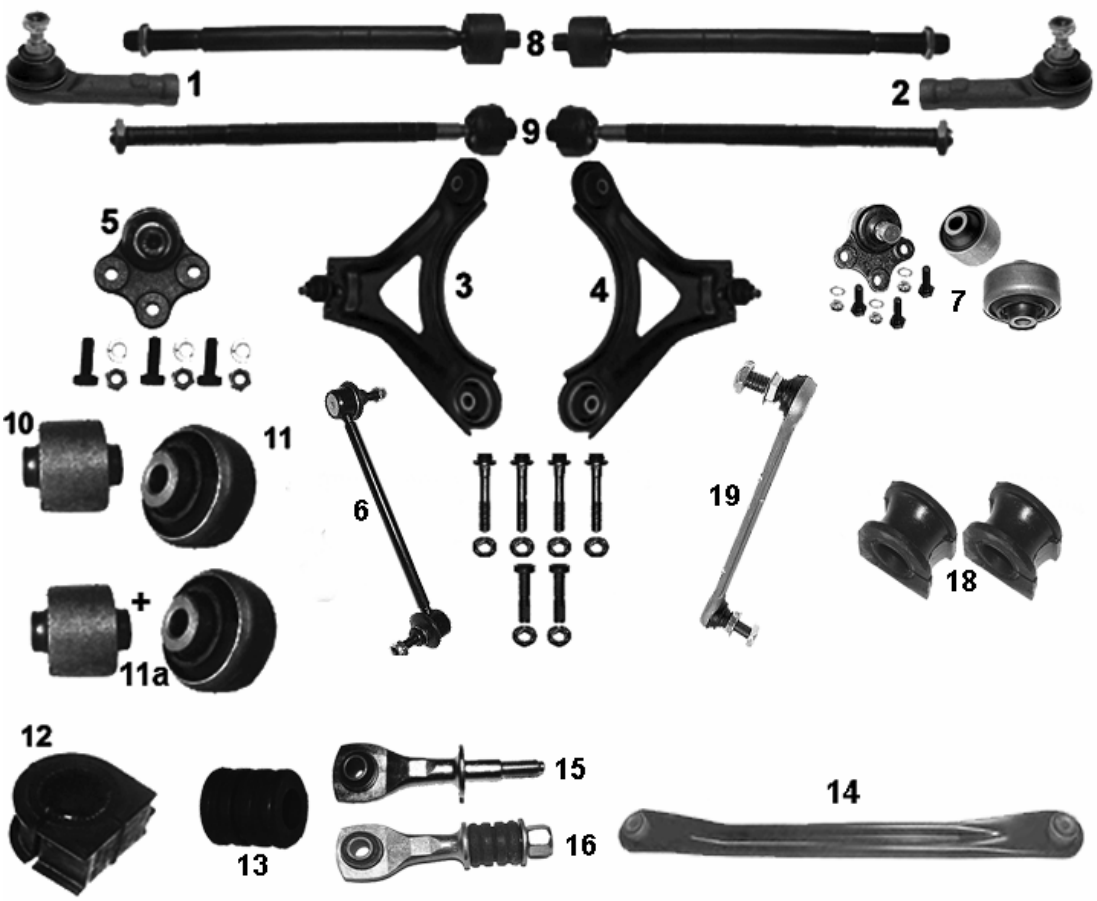


| NR | MAPCO | REF | | | ← | → | ↑ | ↓ | | | NEW | INFO |
|---|---|---|---|---|---|---|---|---|---|---|---|---|
| 1 | 49640 | 1035691 | ✓ | | ✓ | | | | ✓ | ✓ | | M16x1,5RHT |
| 2 | 49641 | 1035690 | ✓ | | | ✓ | | | ✓ | ✓ | | M16x1,5RHT |
| 3 | 19768 | 1102949 | ✓ | | ✓ | | | | ✓ | ✓ | | →2000 |
| 4 | 19769 | 1102948 | ✓ | | | ✓ | | | ✓ | ✓ | | →2000 |
| 5 | 19759 | 93BB3395AC | ✓ | | ✓ | ✓ | | | ✓ | ✓ | | |
| 6 | 19605HPS | 6960036 | ✓ | | ✓ | ✓ | | | ✓ | ✓ | | 237mm |
| 7 | 19260 | | ✓ | | ✓ | ✓ | | | ✓ | ✓ | | Kit |
| 8 | 49642 | 3903147 | ✓ | | ✓ | ✓ | | | ✓ | ✓ | | 14”-Rad / Wheel |
| 9 | 49643 | 3903149 | ✓ | | ✓ | ✓ | | | ✓ | ✓ | | 15”-Rad / Wheel |
| 10 | 33616 | 6790115 | ✓ | | ✓ | ✓ | | | ✓ | ✓ | | |
| 11 | 33618 | 1023058 | ✓ | | ✓ | ✓ | | | ✓ | ✓ | | |
| 11a | 33616/8 | | ✓ | | ✓ | ✓ | | | ✓ | ✓ | | Kit 33616 + 33618 |
| 12 | 33630 | 7144202 | | ✓ | ✓ | ✓ | | | ✓ | ✓ | | |
| 13 | 33634 | 6915411 | | ✓ | ✓ | ✓ | | | ✓ | ✓ | | |
| 14 | 19658 | 6867577 | | ✓ | ✓ | ✓ | | | ✓ | ✓ | | |
| 15 | 33632 | 1054209 | | ✓ | ✓ | ✓ | | | ✓ | ✓ | | →07/98 |
| 16 | 33632/1 | | | ✓ | ✓ | ✓ | | | ✓ | ✓ | | →07/98 |
| 17 | 95768 | | ✓ | | ✓ | ✓ | | | ✓ | ✓ | | MS |
| 18 | 33629/2 | 6714194 | ✓ | | ✓ | ✓ | | | ✓ | ✓ | | Ø 19mm |
| 19 | 19601 | 1106269 | ✓ | | ✓ | ✓ | | | ✓ | ✓ | | 238,0 mm Aluminium |

## FORD MONDEO III

11/00→

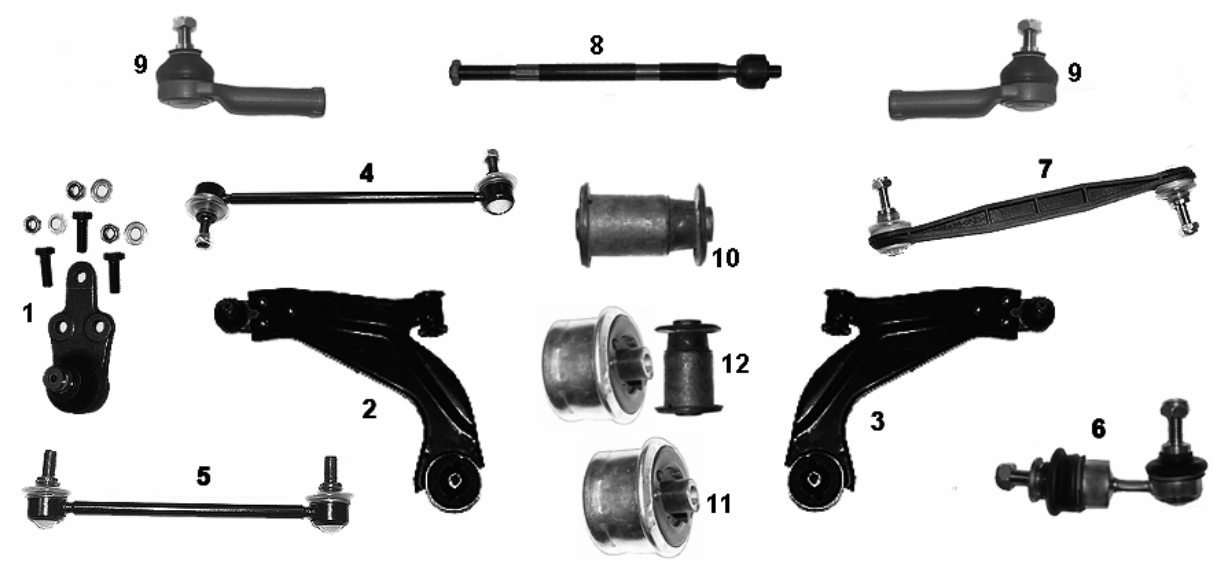


| NR | MAPCO | REF | | | ← | → | ↑ | ↓ | | | NEW | INFO |
|---|---|---|---|---|---|---|---|---|---|---|---|---|
| 1 | 59673 | 1S713395AE | ✓ | | ✓ | ✓ | | ✓ | ✓ | ✓ | | |
| 2 | 59644 | 1116579 | ✓ | | ✓ | | | | ✓ | ✓ | | |
| 3 | 59645 | 1116578 | ✓ | | | ✓ | | | ✓ | ✓ | | |
| 4 | 19773 | 1127646 | ✓ | | ✓ | ✓ | | | ✓ | ✓ | | 250,0 mm Stahl/steel |
| 5 | 19775HPS | 1127648 | | ✓ | ✓ | ✓ | | | ✓ | ✓ | | |
| 6 | 19776 | 1130452 | | ✓ | ✓ | ✓ | | | ✓ | ✓ | | |
| 7 | 19777 | 1219697 | ✓ | | ✓ | ✓ | | | ✓ | ✓ | | 250,0 mm Plastik |
| 8 | 59666 | 4111327 | ✓ | | ✓ | ✓ | | | ✓ | ✓ | | M16x1,5RHT |
| 9 | 59672 | 1138313 | ✓ | | ✓ | ✓ | | | ✓ | ✓ | ✓ | M16x1,5 |
| 10 | 33646 | 1118476 | ✓ | | ✓ | ✓ | | | ✓ | ✓ | ✓ | |
| 11 | 33647 | 1311416 | ✓ | | ✓ | ✓ | | | ✓ | ✓ | ✓ | |
| 12 | 33646/7 | | ✓ | | ✓ | ✓ | | | ✓ | ✓ | ✓ | |

## FORD PUMA (EC_) 03/97→

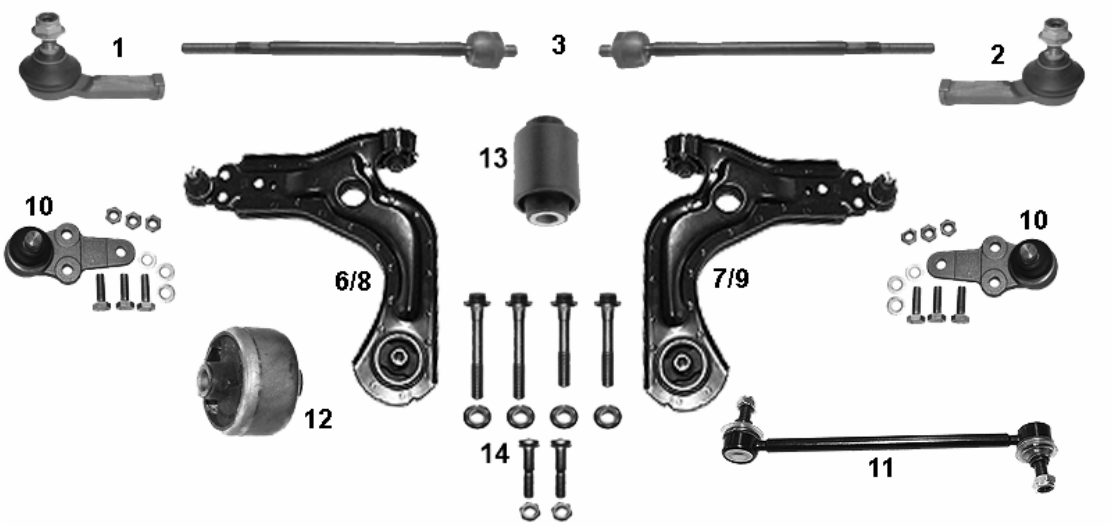


| NR | MAPCO | REF | | | ← | → | ↑ | ↓ | | | NEW | INFO |
|---|---|---|---|---|---|---|---|---|---|---|---|---|
| 1 | **19640** | 1011858 | ✓ | | ✓ | | | | ✓ | ✓ | | M16x1,5RHT |
| 2 | **19641** | 1011857 | ✓ | | | ✓ | | | ✓ | ✓ | | M16x1,5RHT |
| 3 | **19644** | 1044014 | ✓ | | ✓ | ✓ | | | ✓ | ✓ | | L=213 mm |
| 4 | **19644/1** | | ✓ | | ✓ | | | | ✓ | ✓ | | **3+1** |
| 5 | **19644/2** | | ✓ | | | ✓ | | | ✓ | ✓ | | **3+2** |
| 6 | **19642** | 1020220 | ✓ | | ✓ | ✓ | | | | ✓ | | |
| 7 | **19643** | 1020214 | ✓ | | | ✓ | | | | ✓ | | |
| 8 | **19642/1** | 1021220 | ✓ | | | ✓ | | | ✓ | | | |
| 9 | **19643/1** | 1021219 | ✓ | | ✓ | ✓ | | | ✓ | | | |
| 10 | **19763** | 5021410 | ✓ | | ✓ | ✓ | | | ✓ | ✓ | | 16,5 mm |
| 11 | **19608HPS** | 1004018 | ✓ | | ✓ | ✓ | | | ✓ | ✓ | | 238 mm |
| 12 | **33635** | 1063372 | ✓ | | ✓ | ✓ | | | ✓ | ✓ | | |
| 13 | **33636** | 1055191 | ✓ | | ✓ | ✓ | | | ✓ | ✓ | | |
| 14 | **95642** | | ✓ | | ✓ | ✓ | | | ✓ | ✓ | | MS |
| | | | | | | | | | | | | |
| | | | | | | | | | | | | |
| | | | | | | | | | | | | |

## FORD SCORPIO I — 04/85→12/94
## FORD GRANADA — 08/77→08/85

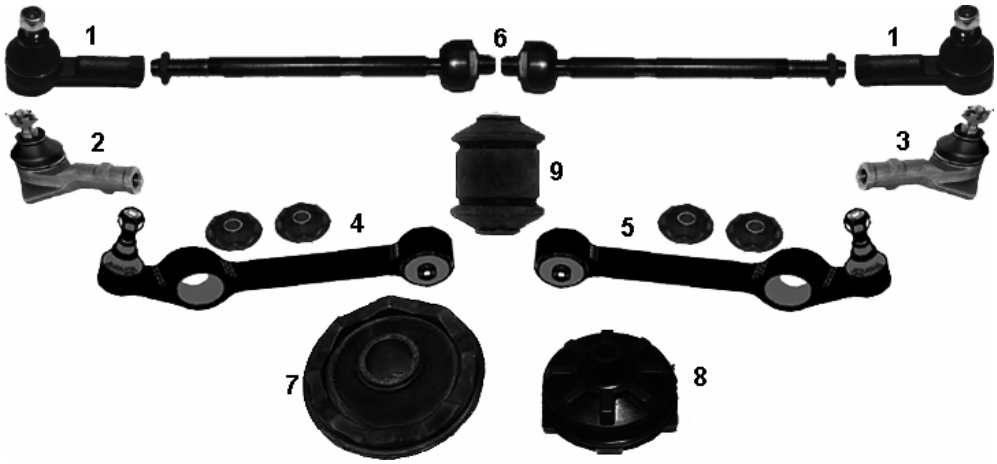


| NR | MAPCO | REF | | | ← | → | ↑ | ↓ | | | NEW | INFO |
|---|---|---|---|---|---|---|---|---|---|---|---|---|
| 1 | **19745** | 6160988 | ✓ | | ✓ | ✓ | | | ✓ | ✓ | | STOP 4WD, M14x2RHT |
| 2 | **19735** | 6120232 | ✓ | | ✓ | | | | ✓ | ✓ | | ✓ 4WD, M14x2RHT |
| 3 | **19736** | 6120231 | ✓ | | | ✓ | | | ✓ | ✓ | | ✓ 4WD |
| 4 | **19746/1** | 6154290 | ✓ | | ✓ | | | | ✓ | ✓ | | |
| 5 | **19747/1** | 6154289 | ✓ | | | ✓ | | | ✓ | ✓ | | |
| 6 | **19655** | 6132991 | ✓ | | ✓ | ✓ | | | ✓ | ✓ | | |
| 7 | **33627** | 1656752 | ✓ | | ✓ | ✓ | | | ✓ | ✓ | | |
| 8 | **33645** | 6141919 | | ✓ | ✓ | ✓ | | | ✓ | ✓ | | |
| 9 | **33677** | 85GB3063AC | ✓ | | ✓ | ✓ | | ✓ | ✓ | ✓ | ✓ | |

## FORD SCORPIO II — 10/94→08/98

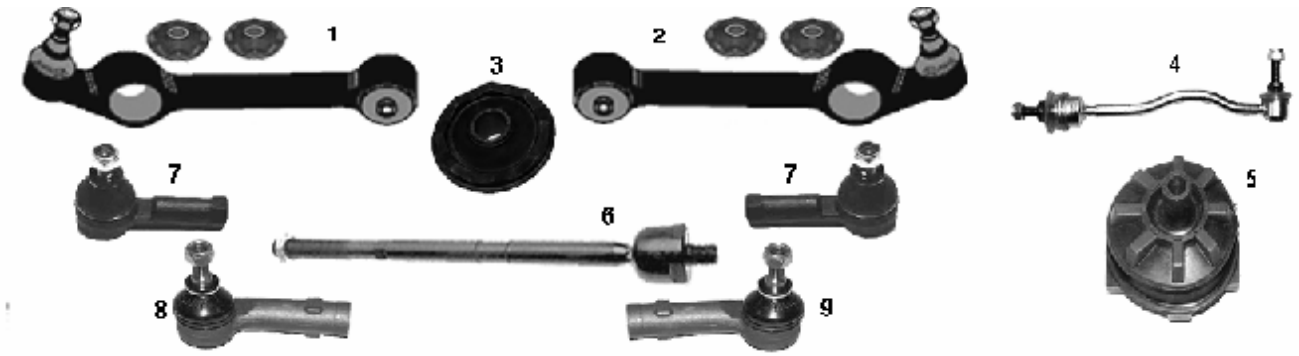


| NR | MAPCO | REF | | | ← | → | ↑ | ↓ | | | NEW | INFO |
|---|---|---|---|---|---|---|---|---|---|---|---|---|
| 1 | **19746/1** | 6154290 | ✓ | | ✓ | | | | ✓ | ✓ | | ->12/95 |
| 2 | **19747/1** | 6154289 | ✓ | | | ✓ | | | ✓ | ✓ | | ->12/95 |
| 3 | **33627** | 1656752 | ✓ | | ✓ | ✓ | | | ✓ | ✓ | | |
| 4 | **19659HPS** | 1045413 | ✓ | | ✓ | ✓ | | | ✓ | ✓ | | |
| 5 | **33645** | 6141919 | | ✓ | ✓ | ✓ | | | ✓ | ✓ | | |
| 6 | **19762** | 7292960 | ✓ | | ✓ | ✓ | | | ✓ | ✓ | | L= 305 mm M16x1,5RHT |
| 7 | **19745** | 6160988 | ✓ | | ✓ | ✓ | | | ✓ | ✓ | | STOP 4WD M14x2,0RHT |
| 8 | **59665** | 5030222 | ✓ | | ✓ | | | | ✓ | ✓ | ✓ | M16x1,5RHT |
| 9 | **59657** | 5030221 | ✓ | | | ✓ | | | ✓ | ✓ | | M16x1,5RHT |
| | | | | | | | | | | | | |
| | | | | | | | | | | | | |

## FORD SIERRA 1982→02/93

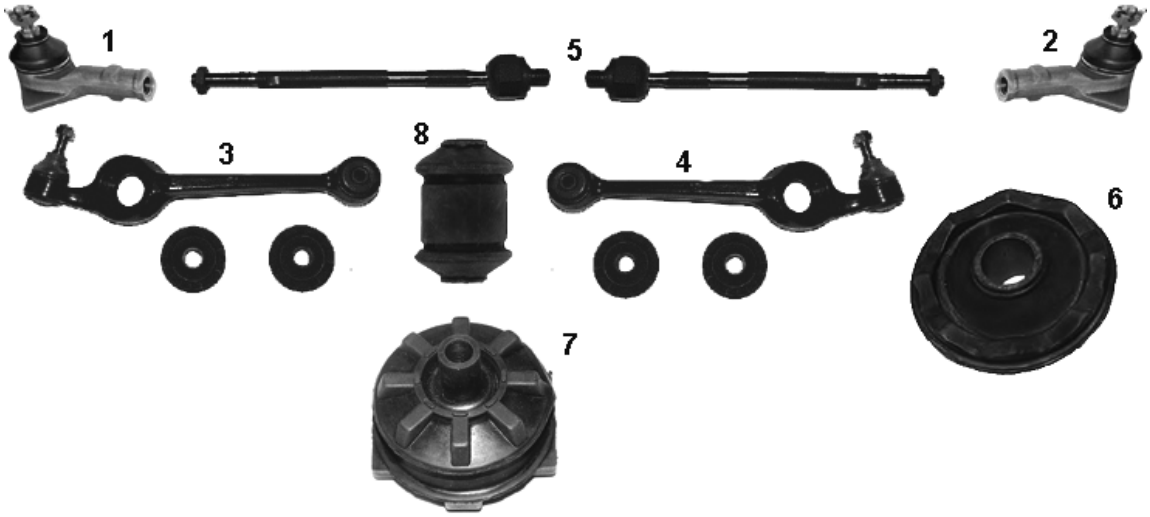


| NR | MAPCO | REF | | | ← | → | ↑ | ↓ | | | NEW | INFO |
|---|---|---|---|---|---|---|---|---|---|---|---|---|
| 1 | 19735 | 6120232 | ✓ | | ✓ | | | | ✓ | ✓ | | M14x2,0RHT |
| 2 | 19736 | 6120231 | ✓ | | | ✓ | | | ✓ | ✓ | | M14x2,0RHT |
| 3 | 19737/1 | 6114617 | ✓ | | ✓ | | | | ✓ | ✓ | | |
| 4 | 19738/1 | 6114616 | ✓ | | | ✓ | | | ✓ | ✓ | | |
| 5 | 19654 | 6185336 | ✓ | | ✓ | ✓ | | | ✓ | ✓ | | STOP ZF 5019429 / 5023570 |
| 6 | 33627 | 1656752 | ✓ | | ✓ | ✓ | | | ✓ | ✓ | | |
| 7 | 33645 | 6141919 | | ✓ | ✓ | ✓ | | | ✓ | ✓ | | |
| 8 | 33677 | 85GB3063AC | ✓ | | ✓ | ✓ | | ✓ | ✓ | ✓ | ✓ | |

## FORD TRANSIT (7__ _) 11/65→10/86

| NR | MAPCO | REF | | | ← | → | ↑ | ↓ | | | NEW | INFO |
|---|---|---|---|---|---|---|---|---|---|---|---|---|
| 1 | 59658 | 1796515 | ✓ | | | ✓ | | | ✓ | ✓ | | M18x1,5RHT 1 |

## FORD TRANSIT

10/85→ 03/00

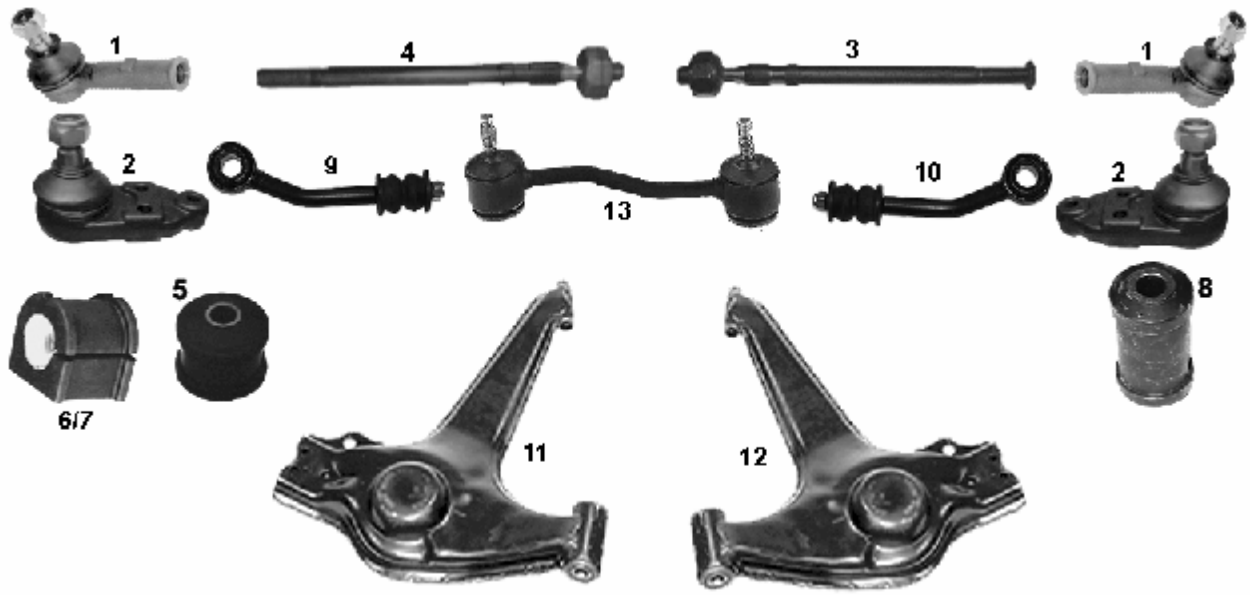


| NR | MAPCO | REF | | | ← | → | ↑ | ↓ | | | NEW | INFO |
|---|---|---|---|---|---|---|---|---|---|---|---|---|
| 1 | 19748 | 6172643 | ✓ | | ✓ | ✓ | | | | ✓ | | →09/92 M16x1,5RHT außen/ outside |
| 1 | 19750 | 6687191 | ✓ | | ✓ | ✓ | | | | ✓ | | 09/91→ M16x1,5RHT |
| 2 | 19749 | 6154161 | ✓ | | ✓ | ✓ | | | | ✓ | | 85→08/91 |
| 2 | 19751 | 6650261 | ✓ | | ✓ | ✓ | | | | ✓ | | 09/91→ M20x1,5 |
| 3 | 19740 | 6156463 | ✓ | | ✓ | ✓ | | | | ✓ | | →12/91 |
| 4 | 49644 | 6869951 | ✓ | | ✓ | ✓ | | | | ✓ | | 01/92→ |
| 5 | 33672 | 6608818 | ✓ | | ✓ | ✓ | | | | ✓ | | 1992→ 03/00 |
| 6 | 33673 | 6521811 | ✓ | | ✓ | ✓ | | | | ✓ | | 1991→ 1994 |
| 7 | 33674 | 6521812 | ✓ | | ✓ | ✓ | | | | ✓ | | 1994→ 03/00 |
| 8 | 33675 | 6517356 | ✓ | | ✓ | ✓ | | | | ✓ | | 1991→ 03/00 |
| 9 | 19780 | 6150970 | ✓ | | | ✓ | | | | ✓ | | |
| 10 | 19781 | 6150971 | ✓ | | ✓ | | | | | ✓ | | |
| 11 | 59654 | 6608832 | ✓ | | ✓ | | | | | ✓ | | 1992→ 03/00 |
| 12 | 59655 | 6608830 | ✓ | | | ✓ | | | | ✓ | | 1992→ 03/00 |
| 13 | 59667 | 6168182 | ✓ | | ✓ | ✓ | | | | ✓ | | L= 180,0 mm (T_ _) 85→09/92 |

## FORD TRANSIT

1987 → 03/00

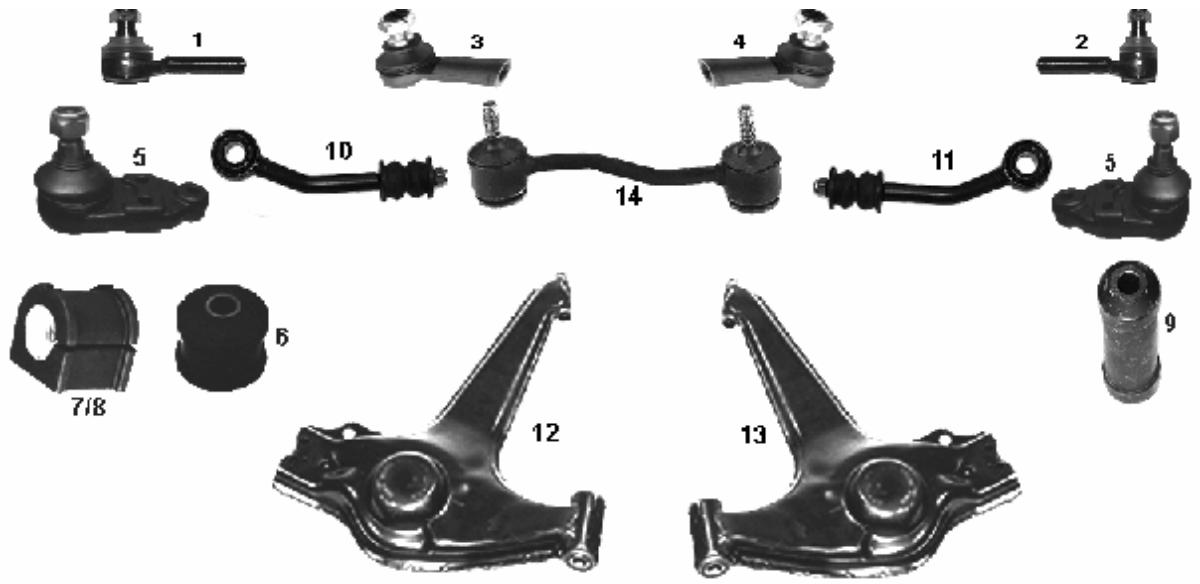


| NR | MAPCO | REF | | | ← | → | ↑ | ↓ | | | NEW | INFO |
|---|---|---|---|---|---|---|---|---|---|---|---|---|
| 1 | **19741** | 5021447 | ✓ | | ✓ | | | | ✓ | | | M20x1,5 LHT |
| 2 | **19742** | 5021446 | ✓ | | | ✓ | | | ✓ | | | M20x1,5 RHT |
| 3 | **49645** | 5025557 | ✓ | | ✓ | | | | ✓ | | | M16x1,5 LHT |
| 4 | **49646** | 5025558 | ✓ | | | ✓ | | | ✓ | | | M16x1,5 RHT |
| 5 | **19749** | 5021430 | ✓ | | ✓ | ✓ | | | ✓ | | | |
| 6 | **33672** | 6608818 | ✓ | | ✓ | ✓ | | | ✓ | | | 1991→ 03/00 |
| 7 | **33673** | 6521811 | ✓ | | ✓ | ✓ | | | ✓ | | | 1991→ 1994 |
| 8 | **33674** | 6521812 | ✓ | | ✓ | ✓ | | | ✓ | | | 1994→ 03/00 |
| 9 | **33675** | 6517356 | ✓ | | ✓ | ✓ | | | ✓ | | | 1991→ 03/00 |
| 10 | **19780** | 6150970 | ✓ | | | ✓ | | | ✓ | | | |
| 11 | **19781** | 6150971 | ✓ | | ✓ | | | | ✓ | | | |
| 12 | **59654** | 6608832 | ✓ | | ✓ | | | | ✓ | | | 1992→ 03/00 |
| 13 | **59655** | 6608830 | ✓ | | | ✓ | | | ✓ | | | 1992→ 03/00 |
| 14 | **59667** | 6168182 | ✓ | | ✓ | ✓ | | | ✓ | | | L= 180,0 mm (T_ _) 85→09/92 |

## FORD TRANSIT (F_ _) 01/00→

| NR | MAPCO | REF | | | ← | → | ↑ | ↓ | | | NEW | INFO |
|---|---|---|---|---|---|---|---|---|---|---|---|---|
| 1 | 59640 | YC153289AA | ✓ | | ✓ | ✓ | | | ✓ | ✓ | | M16x1,5 RHT |
| 2 | 59643 | 4173761 | ✓ | | ✓ | ✓ | | | ✓ | ✓ | | |
| 3 | 59641 | 4059924 | ✓ | | ✓ | | | | ✓ | ✓ | | M16x1,5 RHT |
| 4 | 59642 | 4059923 | ✓ | | | ✓ | | | ✓ | ✓ | | M16x1,5 RHT |
| 5 | 59661 | 4540775 | ✓ | | ✓ | | | | ✓ | ✓ | ✓ | |
| 6 | 59662 | 4540774 | ✓ | | | ✓ | | | ✓ | ✓ | ✓ | |

## FORD TRANSIT CONNECT 09/02→

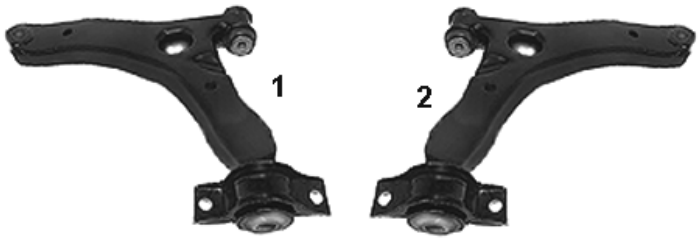


| NR | MAPCO | REF | | | ← | → | ↑ | ↓ | | | NEW | INFO |
|---|---|---|---|---|---|---|---|---|---|---|---|---|
| 1 | 59674 | 4366974 | ✓ | | ✓ | | | ✓ | ✓ | ✓ | | |
| 2 | 59675 | 4366973 | ✓ | | | ✓ | | ✓ | ✓ | ✓ | | |

# HONDA

## HONDA ACCORD IV 1.6, 1.8, 1.9i, 2.0 — 01/92→10/98
## HONDA ACCORD IV 2.0i 16V — 01/92→02/93

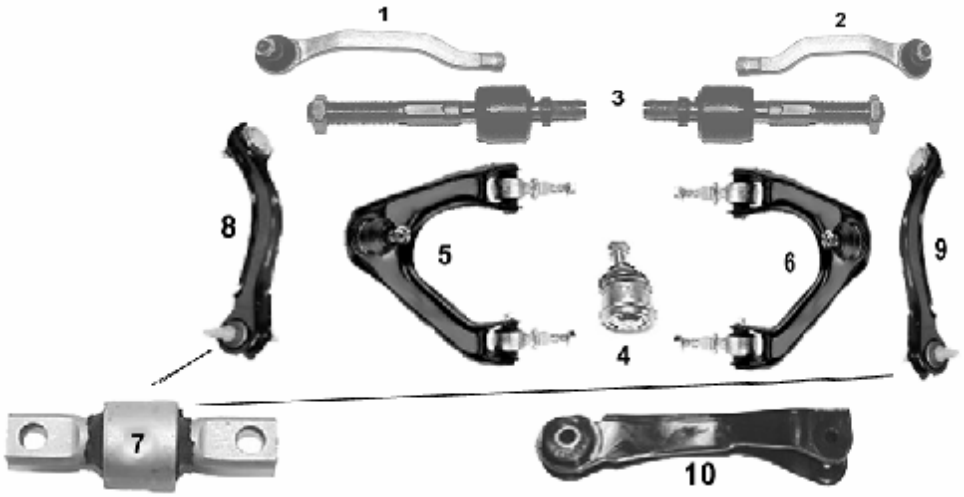


| NR | MAPCO | REF | | | ← | → | ↑ | ↓ | | | NEW | INFO |
|---|---|---|---|---|---|---|---|---|---|---|---|---|
| 1 | 19504 | 53560-SM4-004 | ✓ | | ✓ | | | | ✓ | ✓ | | M14x1,5 RHT |
| 2 | 19505 | 53540-SM4-004 | ✓ | | | ✓ | | | ✓ | ✓ | | M14x1,5 RHT |
| 3 | 19506 | 53521-SM4-013 | ✓ | | ✓ | ✓ | | | ✓ | ✓ | | |
| 4 | 19507 | 51220-SM4-013 | ✓ | | ✓ | ✓ | | | ✓ | ✓ | | |
| 5 | 49506 | 51460-SM4-023 | ✓ | | ✓ | | ✓ | | ✓ | ✓ | | STOP 2.0i 16V |
| 6 | 49507 | 51450-SM4-023 | ✓ | | | ✓ | ✓ | | ✓ | ✓ | | STOP 2.0i 16V |
| 7 | 33523 | 52393-SM4-004 | ✓ | | ✓ | ✓ | ✓ | | ✓ | ✓ | | ✓ 2.0i 16V |
| 8 | 49203 | 52400-SM4-033 | ✓ | | ✓ | | ✓ | | ✓ | ✓ | | ✓ 2.0i 16V |
| 9 | 49204 | 52390-SM1-A03 | ✓ | | | ✓ | ✓ | | ✓ | ✓ | | ✓ 2.0i 16V |
| 10 | 49267 | 52306-SE0-030 | | ✓ | ✓ | ✓ | | | ✓ | ✓ | | |

## HONDA ACCORD V Aerodeck 2.0 iLS 16V — 09/93→02/98
## HONDA ACCORD V Aerodeck 2.2 iES — 09/93→02/99

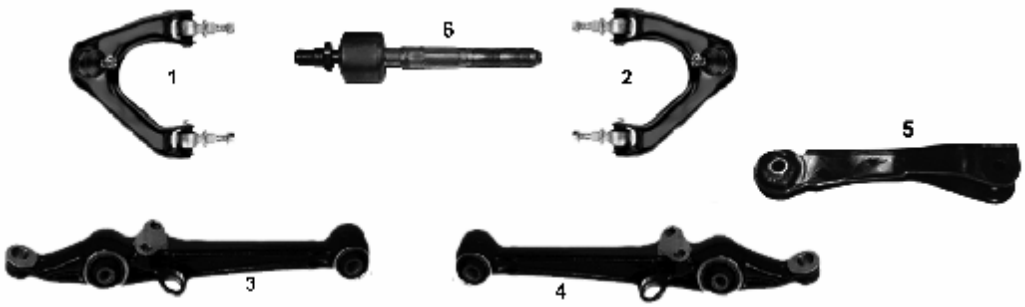


| NR | MAPCO | REF | | | ← | → | ↑ | ↓ | | | NEW | INFO |
|---|---|---|---|---|---|---|---|---|---|---|---|---|
| 1 | 49205 | 51460-SV5-000 | ✓ | | ✓ | | ✓ | | ✓ | ✓ | | |
| 2 | 49206 | 51450-SV4-000 | ✓ | | | ✓ | ✓ | | ✓ | ✓ | | |
| 3 | 49209 | 51365-SV4-000 | ✓ | | ✓ | | | ✓ | ✓ | ✓ | | |
| 4 | 49210 | 51355-SV4-000 | ✓ | | | ✓ | | ✓ | ✓ | ✓ | | |
| 5 | 49267 | 52306-SE0-030 | | ✓ | ✓ | ✓ | | | ✓ | ✓ | | |
| 6 | 59246 | 53010-SV4-000 | ✓ | | ✓ | ✓ | | | ✓ | ✓ | | M14x1,5 RHT L=135 mm |

## HONDA ACCORD VI 1.8 - 2.0i_ - 2.2i VTEC, 2.0TDi 1994→10/98

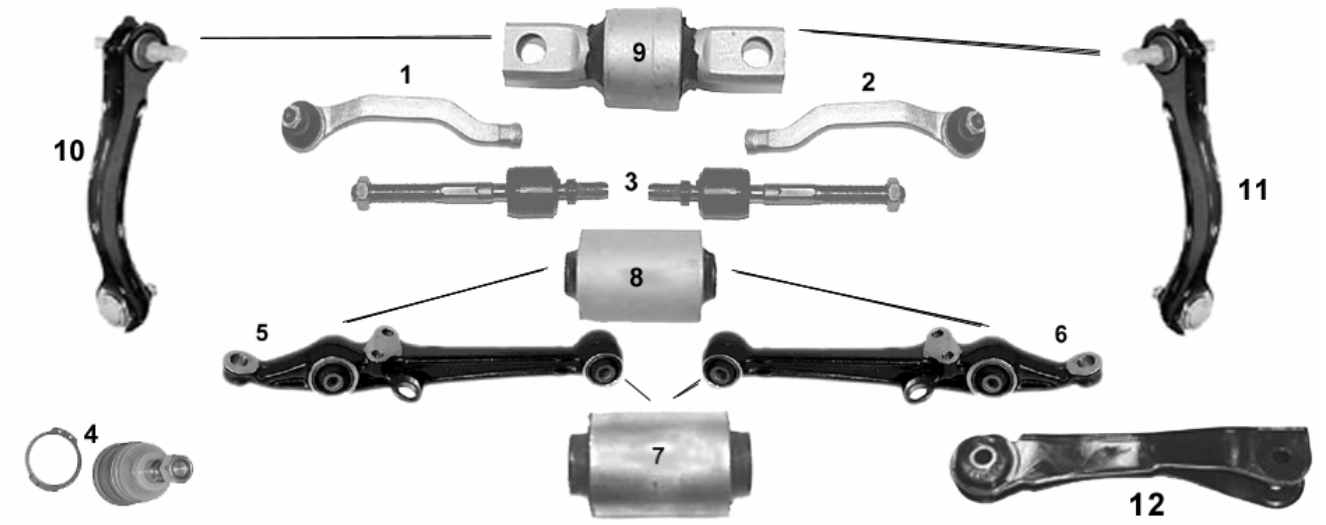


| NR | MAPCO | REF | | | ← | → | ↑ | ↓ | | | NEW | INFO |
|---|---|---|---|---|---|---|---|---|---|---|---|---|
| 1 | 19504 | 53560-SM4-004 | ✓ | | ✓ | | | | ✓ | ✓ | | M14x1,5 RHT |
| 2 | 19505 | 53540-SM4-004 | ✓ | | | ✓ | | | ✓ | ✓ | | M14x1,5 RHT |
| 3 | 19506 | 53521-SM4-013 | ✓ | | ✓ | ✓ | | | ✓ | ✓ | | |
| 4 | 49515 | 51220-S84-A02 | ✓ | | ✓ | ✓ | | ✓ | ✓ | ✓ | | |
| 5 | 49508 | 51365-SM4-040 | ✓ | | ✓ | | | ✓ | ✓ | ✓ | | |
| 6 | 49509 | 51355-SM4-040 | ✓ | | | ✓ | | ✓ | ✓ | ✓ | | |
| 7 | 33222 | 51393-SV1-A01 | ✓ | | ✓ | ✓ | | ✓ | ✓ | ✓ | | |
| 8 | 33522 | 51393-SE0-003 | ✓ | | ✓ | ✓ | | ✓ | ✓ | ✓ | | |
| 9 | 33523 | 52393-SM4-004 | ✓ | | ✓ | ✓ | ✓ | | ✓ | ✓ | | |
| 10 | 49203 | 52400-SM4-033 | ✓ | | ✓ | | ✓ | | ✓ | ✓ | | |
| 11 | 49204 | 52390-SM1-A03 | ✓ | | | ✓ | ✓ | | ✓ | ✓ | | |
| 12 | 49267 | 52306-SE0-030 | | ✓ | ✓ | ✓ | | | ✓ | ✓ | | |

## HONDA ACCORD VII (CG) 10/98→

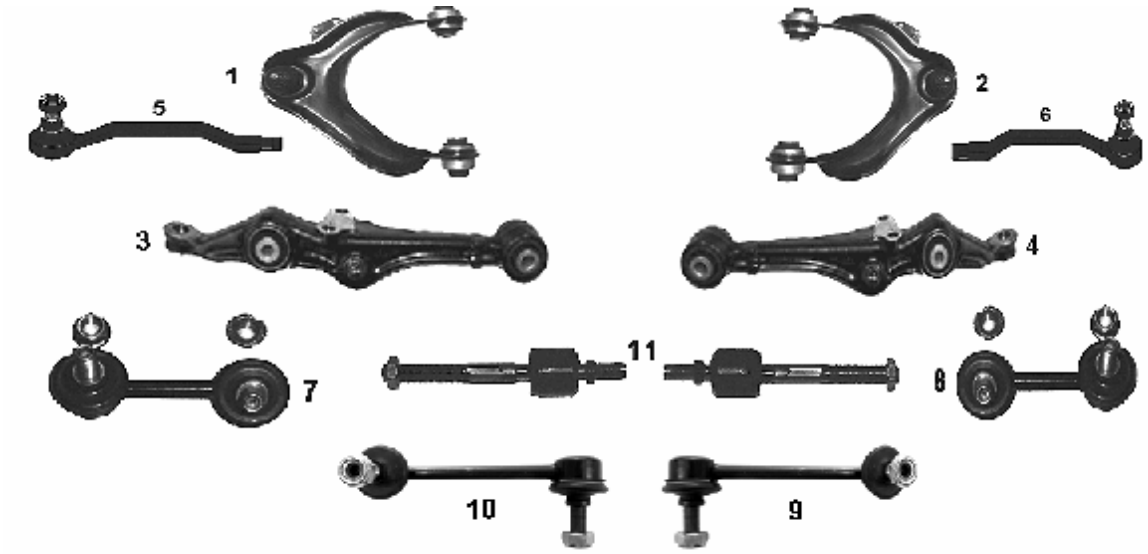


| NR | MAPCO | REF | | | ← | → | ↑ | ↓ | | | NEW | INFO |
|---|---|---|---|---|---|---|---|---|---|---|---|---|
| 1 | 49211 | 51460-S84-A01 | ✓ | | ✓ | | ✓ | | ✓ | ✓ | | |
| 2 | 49212 | 51450-S84-A01 | ✓ | | | ✓ | ✓ | | ✓ | ✓ | | |
| 3 | 49213 | 51365-S84-A00 | ✓ | | ✓ | | | ✓ | ✓ | ✓ | | |
| 4 | 49214 | 51355-S84-A00 | ✓ | | | ✓ | | ✓ | ✓ | ✓ | | |
| 5 | 49264 | 53560-S1A-E01 | ✓ | | ✓ | | | | ✓ | ✓ | | M14x1,5RHT |
| 6 | 49265 | 53540-S1A-E01 | ✓ | | | ✓ | | | ✓ | ✓ | | M14x1,5RHT |
| 7 | 59500 | 51320-S84-A01 | ✓ | | ✓ | | | | ✓ | ✓ | | |
| 8 | 59501 | 51321-S84-A01 | ✓ | | | ✓ | | | ✓ | ✓ | | |
| 9 | 59502 | 52320-S84-A01 | | ✓ | | ✓ | | | ✓ | ✓ | | |
| 10 | 59503 | 52325-S84-A01 | | ✓ | ✓ | | | | ✓ | ✓ | | |
| 11 | 59514 | 53010-S84-A01 | ✓ | | ✓ | ✓ | | | ✓ | ✓ | | |

## HONDA ACCORD VIII (CL) 02/03→

| NR | MAPCO | REF | | | ← | → | ↑ | ↓ | | | NEW | INFO |
|---|---|---|---|---|---|---|---|---|---|---|---|---|
| 1 | 51500 | 51460-SDA-A01 | ✓ | | ✓ | | ✓ | | ✓ | ✓ | | |
| 2 | 51501 | 51450-SDA-A01 | ✓ | | | ✓ | ✓ | | ✓ | ✓ | | |
| | | | | | | | | | | | | |

## HONDA CIVIC II 10/83→10/87

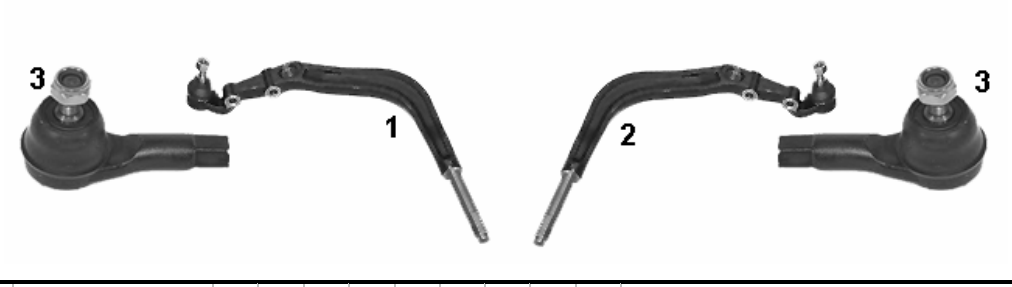


| NR | MAPCO | REF | | | ← | → | ↑ | ↓ | | | NEW | INFO |
|---|---|---|---|---|---|---|---|---|---|---|---|---|
| 1 | 59330 | 51361-SB2-013 | ✓ | | ✓ | | | ✓ | ✓ | ✓ | | |
| 2 | 59331 | 51351-SB2-013 | ✓ | | | ✓ | | ✓ | ✓ | ✓ | | |
| 3 | 59319 | 53540-611-020 | ✓ | | ✓ | ✓ | | | ✓ | ✓ | | M12x1,25 RHT |

## HONDA CIVIC III (ED) 10/87→1991

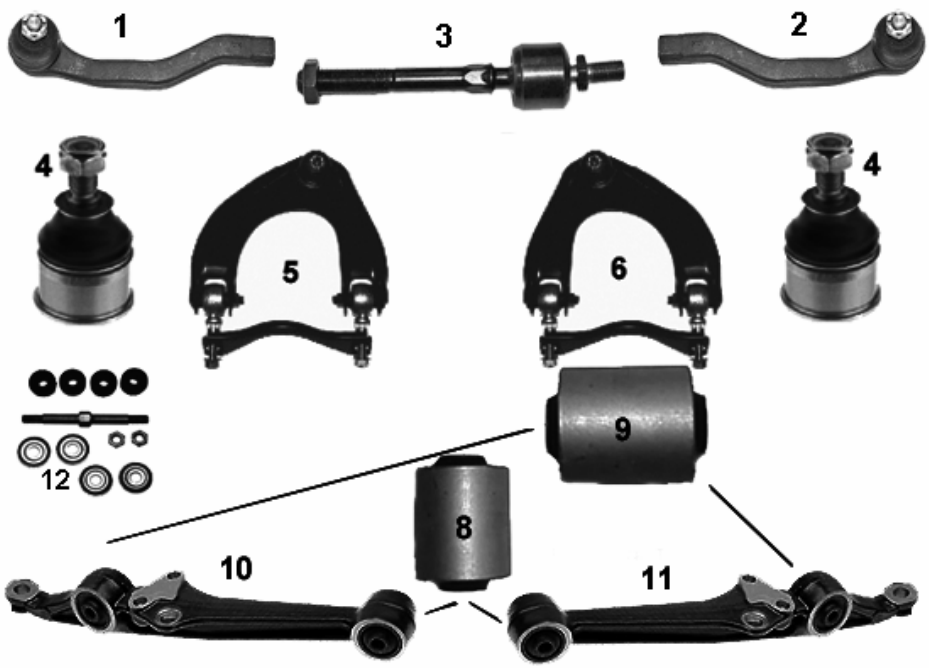


| NR | MAPCO | REF | | | ← | → | ↑ | ↓ | | | NEW | INFO |
|---|---|---|---|---|---|---|---|---|---|---|---|---|
| 1 | 19500 | 53560-SH3-013 | ✓ | | ✓ | | | | ✓ | ✓ | | M14x1,5RHT |
| 2 | 19501 | 53540-SH3-013 | ✓ | | | ✓ | | | ✓ | ✓ | | M14x1,5RHT |
| 3 | 19502 | 53521-SH3-003 | ✓ | | ✓ | ✓ | | | ✓ | ✓ | | |
| 4 | 19503 | 51220-SH3-003 | ✓ | | ✓ | ✓ | | ✓ | ✓ | ✓ | | |
| 5 | 49511 | 51460-SH3-023 | ✓ | | ✓ | | ✓ | | ✓ | ✓ | | |
| 6 | 49512 | 51450-SH3-023 | ✓ | | | ✓ | ✓ | | ✓ | ✓ | | |
| 8 | 33521 | 51810-SH3-004 | ✓ | | ✓ | ✓ | | ✓ | ✓ | ✓ | | |
| 9 | 33221 | 51810-SV4-003 | ✓ | | ✓ | ✓ | | ✓ | ✓ | ✓ | | |
| 10 | 59506 | 51365-SH3-020 | ✓ | | ✓ | | | ✓ | ✓ | ✓ | | |
| 11 | 59507 | 51355-SH3-020 | ✓ | | | ✓ | | ✓ | ✓ | ✓ | | |
| 12 | 49517 | 90112-SE0-000 | ✓ | | ✓ | ✓ | | | ✓ | ✓ | | |

## HONDA CIVIC IV (EG,EH,EJ) 1.3 - 1.5Lsi - 1.5VEi
## HONDA CIVIC IV (EG,EH,EJ) 1.6 Esi - 1.6VTi

10/91→11/95

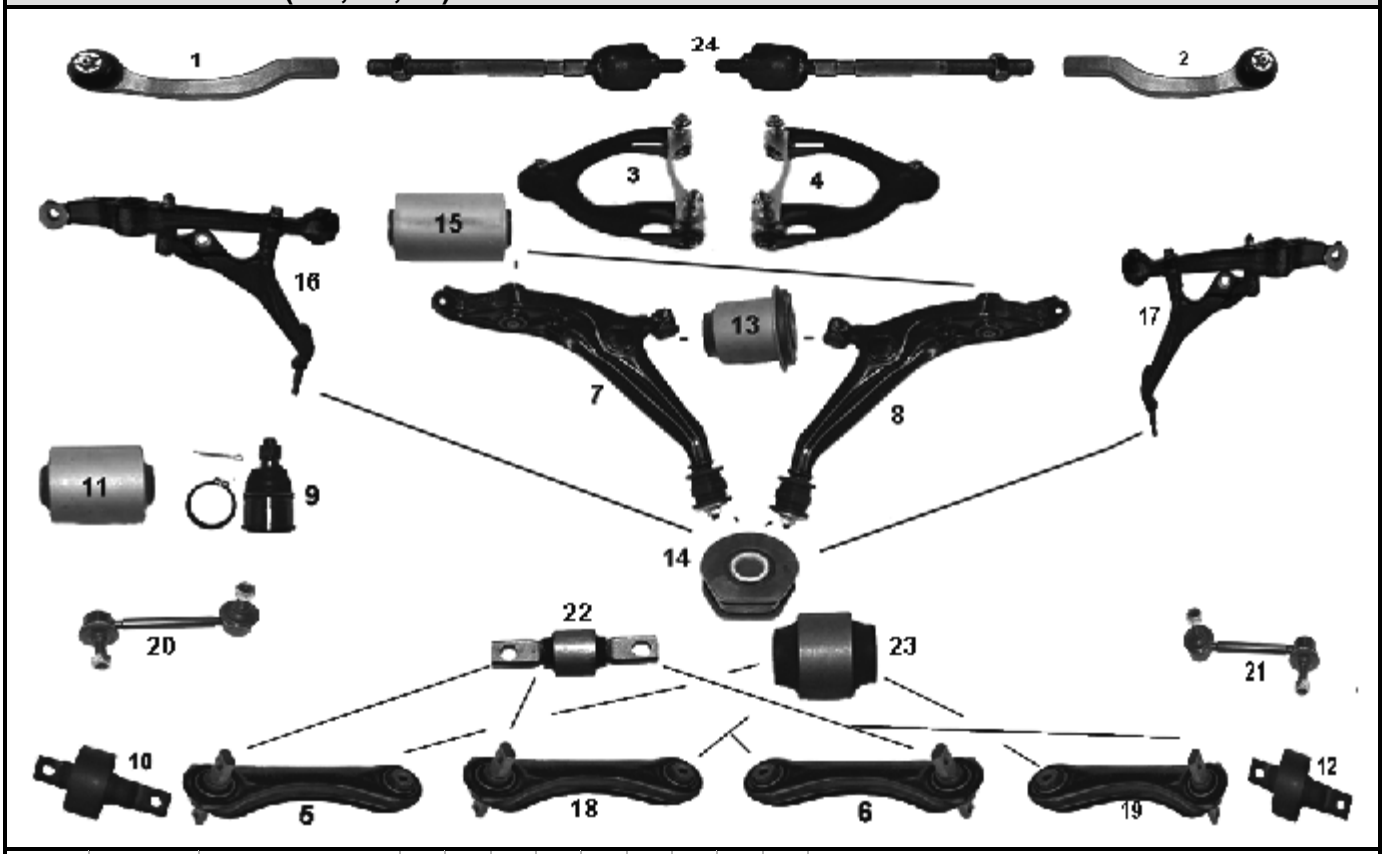


| NR | MAPCO | REF | | | ← | → | ↑ | ↓ | | | NEW | INFO |
|---|---|---|---|---|---|---|---|---|---|---|---|---|
| 1 | 19508 | 53560-SR3-003 | ✓ | | ✓ | | | | ✓ | ✓ | | M14x1,5RHT |
| 2 | 19509 | 53540-SR3-003 | ✓ | | | ✓ | | | ✓ | ✓ | | M14x1,5RHT |
| 3 | 49502 | 51460-SR3-023 | ✓ | | ✓ | | ✓ | | ✓ | ✓ | | |
| 4 | 49503 | 51450-SR3-023 | ✓ | | | ✓ | ✓ | | ✓ | ✓ | | |
| 5 | 49504 | 52400-SR3-000 | | ✓ | ✓ | | | | ✓ | ✓ | | ✓ EJ HA |
| 6 | 49505 | 52390-SR3-000 | | ✓ | | ✓ | | | ✓ | ✓ | | ✓ EJ HA |
| 7 | 49500 | 51360-S04-G00 | ✓ | | ✓ | | | ✓ | ✓ | ✓ | | ✓ EJ 1.5i |
| 8 | 49501 | 51350-S04-G00 | ✓ | | | ✓ | | ✓ | ✓ | ✓ | | ✓ EJ 1.5i |
| 9 | 49510 | 51220-S04-003 | ✓ | | ✓ | ✓ | | ✓ | ✓ | ✓ | | |
| 10 | 33520 | 52385-ST3-G01 | | ✓ | ✓ | ✓ | | | ✓ | ✓ | | |
| 11 | 33521 | 51810-SH3-004 | ✓ | | ✓ | ✓ | | | ✓ | ✓ | | |
| 12 | 33223 | 52370-SH3-000 | | ✓ | ✓ | ✓ | | | ✓ | ✓ | | ✓ 1.6 VTi |
| 13 | 33525 | 52365-SH3-014 | ✓ | | ✓ | ✓ | | ✓ | ✓ | ✓ | | ✓ EJ 1.5i |
| 14 | 33526 | 51395-SR3-N02 | ✓ | | ✓ | ✓ | | ✓ | ✓ | ✓ | | ✓ EJ 1.5i |
| 15 | 33527 | 51392-SR3-024 | ✓ | | ✓ | ✓ | | ✓ | ✓ | ✓ | | ✓ EJ 1.5i |
| 16 | 49215 | 51360-SR3-020 | ✓ | | ✓ | | | ✓ | ✓ | ✓ | | ✓ EG8,EH9,EG9 |
| 17 | 49216 | 51350-SR3-020 | ✓ | | | ✓ | | ✓ | ✓ | ✓ | | ✓ EG8,EH9,EG9 |
| 18 | 49262 | 52400-SR3-A00 | | ✓ | ✓ | | ✓ | | ✓ | ✓ | | |
| 19 | 49263 | 52390-SR3-A00 | | ✓ | | ✓ | ✓ | | ✓ | ✓ | | |
| 20 | 49268 | 52320-S10-003 | | ✓ | ✓ | | | | ✓ | ✓ | | |
| 21 | 49269 | 52321-S10-003 | | ✓ | | ✓ | | | ✓ | ✓ | | |
| 22 | 33220 | 52393-SR3-004 | | ✓ | ✓ | ✓ | | | ✓ | ✓ | | |
| 23 | 33524 | 52390-SH3-000 | | ✓ | ✓ | ✓ | | | ✓ | ✓ | | |
| 24 | 59557 | 53010-SR3-010 | ✓ | | ✓ | ✓ | | | ✓ | ✓ | | |

## HONDA CIVIC V (EJ9) 11/95→02/01

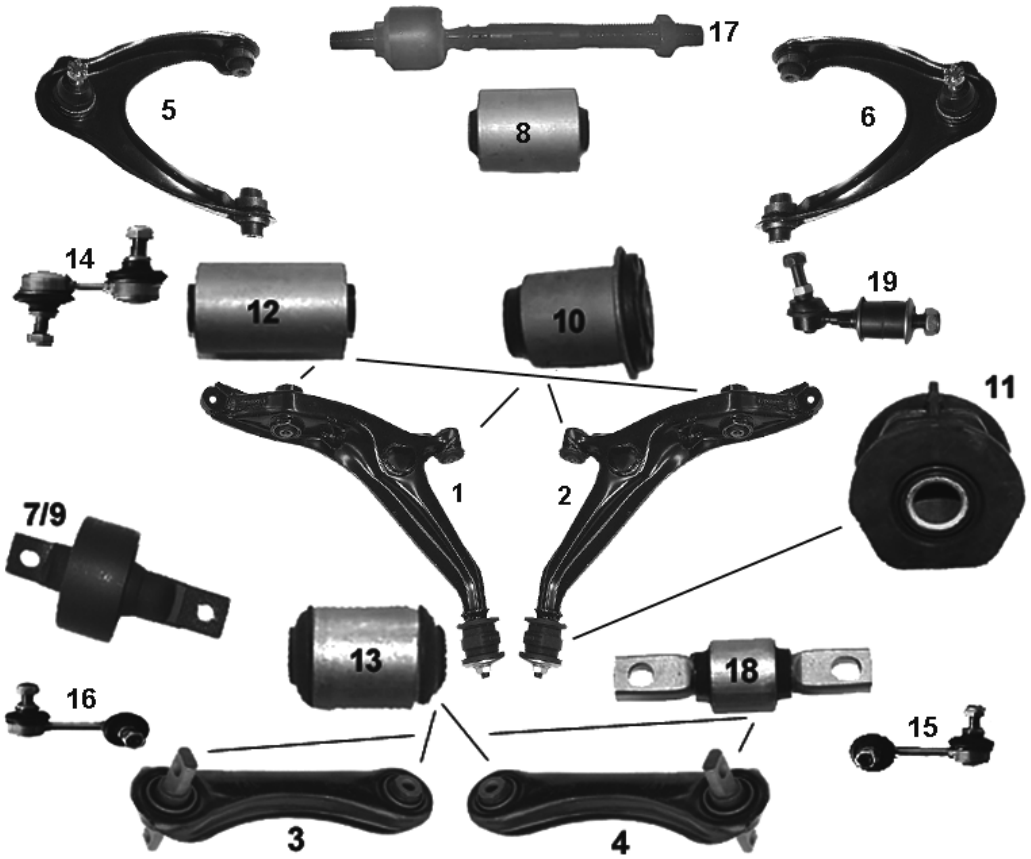


| NR | MAPCO | REF | | | ← | → | ↑ | ↓ | | | NEW | INFO |
|---|---|---|---|---|---|---|---|---|---|---|---|---|
| 1 | 49500 | 51360-S04-G00 | ✓ | | ✓ | | | ✓ | ✓ | ✓ | | ✓ 3-drs |
| 2 | 49501 | 51350-S04-G00 | ✓ | | | ✓ | | ✓ | ✓ | ✓ | | ✓ 3-drs |
| 3 | 49504 | 52400-SR3-000 | | ✓ | ✓ | | | | ✓ | ✓ | | |
| 4 | 49505 | 52390-SR3-000 | | ✓ | | ✓ | | | ✓ | ✓ | | |
| 5 | 49513 | 51460-S04-023 | ✓ | | ✓ | | ✓ | | ✓ | ✓ | | ✓ CRX |
| 6 | 49514 | 51450-S04-023 | ✓ | | | ✓ | ✓ | | ✓ | ✓ | | ✓ CRX |
| 7 | 33520 | 52385-ST3-G01 | | ✓ | ✓ | ✓ | | | ✓ | ✓ | | |
| 8 | 33521 | 51810-SH3-004 | ✓ | | ✓ | ✓ | | | ✓ | ✓ | | |
| 9 | 33223 | 52370-SH3-000 | | ✓ | ✓ | ✓ | | | ✓ | ✓ | | ✓ 1.6VTi |
| 10 | 33525 | 52365-SH3-014 | ✓ | | ✓ | ✓ | | ✓ | ✓ | ✓ | | |
| 11 | 33526 | 51396-SR3-N02 | ✓ | | ✓ | ✓ | | ✓ | ✓ | ✓ | | |
| 12 | 33527 | 51392-SR3-024 | ✓ | | ✓ | ✓ | | ✓ | ✓ | ✓ | | |
| 13 | 33528 | 52395-SH3-004 | | ✓ | ✓ | ✓ | | | ✓ | ✓ | | |
| 14 | 49200 | 51320-S04-003 | ✓ | | ✓ | ✓ | | | ✓ | ✓ | | |
| 15 | 49201 | 52230-S04-003 | | ✓ | | ✓ | | | ✓ | ✓ | | |
| 16 | 49202 | 52320-S04-003 | | ✓ | ✓ | | | | ✓ | ✓ | | |
| 17 | 59512 | 53010-S04-000 | ✓ | | ✓ | ✓ | | | ✓ | ✓ | | M14X1,5RHT |
| 18 | 33220 | 52393-SR0-004 | | ✓ | ✓ | ✓ | | | ✓ | ✓ | | |
| 19 | 51505 | 51320-ST7-003 | ✓ | | ✓ | ✓ | | | ✓ | ✓ | ✓ | M10x1,25 |

## HONDA CIVIC VI 1.7 85KW 02/01→

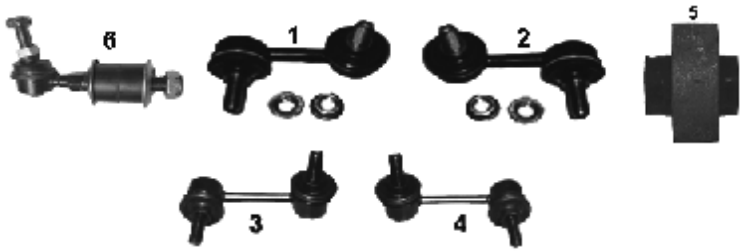


| NR | MAPCO | REF | | | ← | → | ↑ | ↓ | | | NEW | INFO |
|---|---|---|---|---|---|---|---|---|---|---|---|---|
| 1 | 59505 | 51321-S5A-003 | ✓ | | ✓ | | | | ✓ | ✓ | | |
| 2 | 59504 | 51320-S5A-003 | ✓ | | | ✓ | | | ✓ | ✓ | | |
| 3 | 59241 | 52321-S5A-013 | | ✓ | ✓ | | | | ✓ | ✓ | | |
| 4 | 59242 | 52320-S5A-013 | | ✓ | | ✓ | | | ✓ | ✓ | | |
| 5 | 33226 | 51391-S5A-024 | ✓ | | ✓ | ✓ | | ✓ | ✓ | ✓ | | |
| 6 | 51505 | 51320-ST7-003 | ✓ | | ✓ | ✓ | | | ✓ | ✓ | ✓ | M10x1,25 |

## HONDA CONCERTO 1.4-1.6i 16V 08/89→03/95

| NR | MAPCO | REF | | | ← | → | ↑ | ↓ | | | NEW | INFO |
|---|---|---|---|---|---|---|---|---|---|---|---|---|
| 1 | 49911 | GSV1170 | ✓ | | ✓ | ✓ | | | ✓ | ✓ | | |

## HONDA CR-V I (RD) 10/95 → 2002

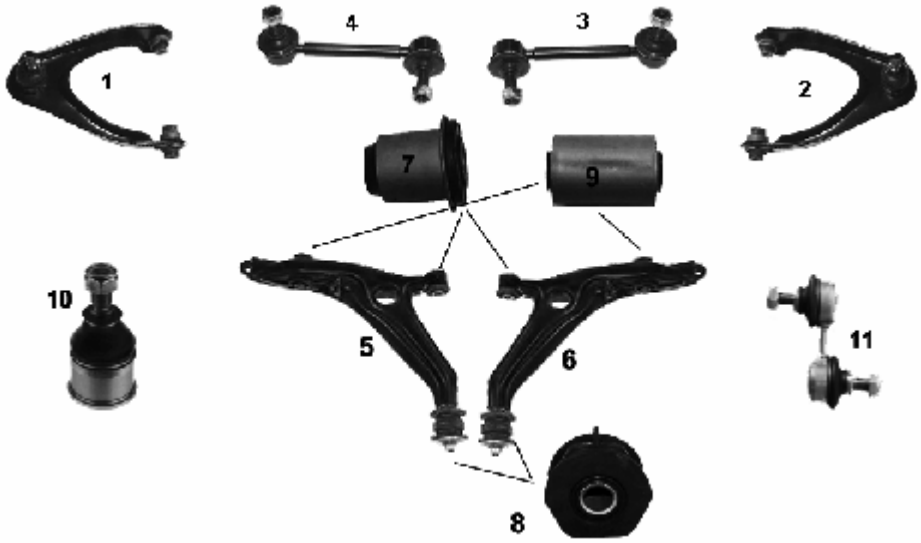


| NR | MAPCO | REF | | | ← | → | ↑ | ↓ | | | NEW | INFO |
|---|---|---|---|---|---|---|---|---|---|---|---|---|
| 1 | 49260 | 51460-S10-020 | ✓ | | ✓ | | ✓ | | ✓ | ✓ | | |
| 2 | 49261 | 51450-S10-020 | ✓ | | | ✓ | ✓ | | ✓ | ✓ | | |
| 3 | 49268 | 52320-S10-003 | | ✓ | | ✓ | | | ✓ | ✓ | | |
| 4 | 49269 | 52321-S10-003 | | ✓ | ✓ | | | | ✓ | ✓ | | |
| 5 | 49217 | 51360-S10-G00 | ✓ | | ✓ | | | ✓ | ✓ | ✓ | | |
| 6 | 49218 | 51350-S10-G00 | ✓ | | | ✓ | | ✓ | ✓ | ✓ | | |
| 7 | 33525 | 52365-SH3-014 | ✓ | | ✓ | ✓ | | ✓ | ✓ | ✓ | | |
| 8 | 33526 | 51396-SR3-N02 | ✓ | | ✓ | ✓ | | ✓ | ✓ | ✓ | | |
| 9 | 33527 | 51392-SR3-024 | ✓ | | ✓ | ✓ | | ✓ | ✓ | ✓ | | |
| 10 | 19503 | 51220-SH3-003 | ✓ | | ✓ | ✓ | | ✓ | ✓ | ✓ | | |
| 11 | 49200 | 51320-S04-003 | ✓ | | ✓ | ✓ | | | ✓ | ✓ | | |

## HONDA CR-V II 07/02 →

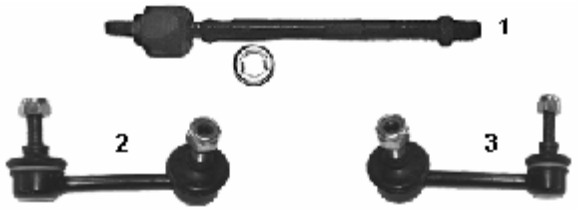


| NR | MAPCO | REF | | | ← | → | ↑ | ↓ | | | NEW | INFO |
|---|---|---|---|---|---|---|---|---|---|---|---|---|
| 1 | **59513** | 53010-S10-000 | ✓ | | ✓ | ✓ | | | ✓ | ✓ | | |
| 2 | **51541** | 52321-S9A-003 | | ✓ | ✓ | | | | ✓ | ✓ | | |
| 3 | **51542** | 52320-S9A-003 | | ✓ | | ✓ | | | ✓ | ✓ | | |

## HONDA CRX I (AF, AS) 10/83→10/87

| NR | MAPCO | REF | | | ← | → | ↑ | ↓ | | | NEW | INFO |
|---|---|---|---|---|---|---|---|---|---|---|---|---|
| 1 | **59330** | 51361-SB2-013 | ✓ | | ✓ | | | ✓ | ✓ | ✓ | | |
| 2 | **59331** | 51351-SB2-013 | ✓ | | | ✓ | | ✓ | ✓ | ✓ | | |
| 3 | **59319** | 53540-611-020 | ✓ | | ✓ | ✓ | | | ✓ | ✓ | | M12x1,25 RHT |

## HONDA CRX II ( ED, EE) 1988→1991

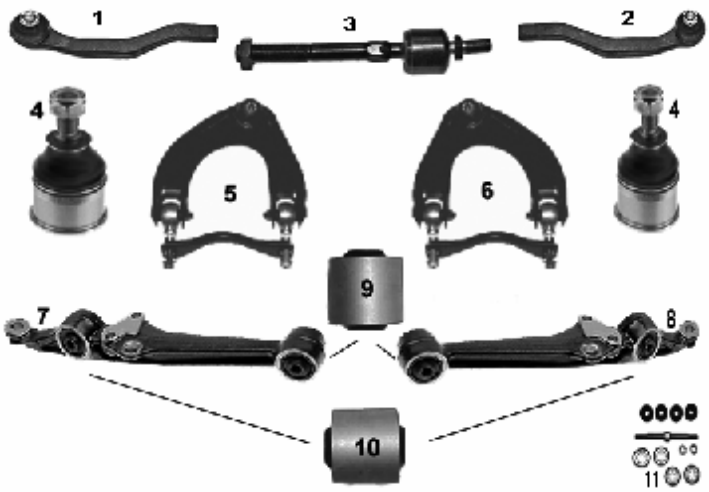


| NR | MAPCO | REF | | | ← | → | ↑ | ↓ | | | NEW | INFO |
|---|---|---|---|---|---|---|---|---|---|---|---|---|
| 1 | **19500** | 53560-SH3-013 | ✓ | | ✓ | | | | ✓ | ✓ | | M14x1,5RHT |
| 2 | **19501** | 53540-SH3-013 | ✓ | | | ✓ | | | ✓ | ✓ | | M14x1,5RHT |
| 3 | **19502** | 53521-SH3-003 | ✓ | | ✓ | ✓ | | | ✓ | ✓ | | |
| 4 | **19503** | 51220-SH3-003 | ✓ | | ✓ | ✓ | | ✓ | ✓ | ✓ | | |
| 5 | **49511** | 51460-SH3-023 | ✓ | | ✓ | | ✓ | | ✓ | ✓ | | |
| 6 | **49512** | 51450-SH3-023 | ✓ | | | ✓ | ✓ | | ✓ | ✓ | | |
| 7 | **59506** | 51365-SH3-020 | ✓ | | ✓ | | | ✓ | ✓ | ✓ | | |
| 8 | **59507** | 51355-SH3-020 | ✓ | | | ✓ | | ✓ | ✓ | ✓ | | |
| 9 | **33521** | 51810-SH3-004 | ✓ | | ✓ | ✓ | | ✓ | ✓ | ✓ | | |
| 10 | **33221** | 51810-SV4-003 | ✓ | | ✓ | ✓ | | ✓ | ✓ | ✓ | | |
| 11 | **49517** | 90112-SE0-000 | ✓ | | ✓ | ✓ | | | ✓ | ✓ | | |

## HONDA HR-V (GH) 03/99 →

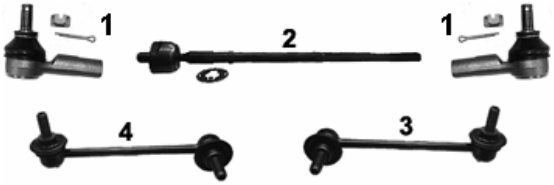


| NR | MAPCO | REF | | | ← | → | ↑ | ↓ | | | NEW | INFO |
|---|---|---|---|---|---|---|---|---|---|---|---|---|
| 1 | 59515 | 53450-SX8-T01 | ✓ | | ✓ | ✓ | | | ✓ | ✓ | | |
| 2 | 59558 | 53010-S2H-J01 | ✓ | | ✓ | ✓ | | | ✓ | ✓ | | |
| 3 | 59243 | 51320-S2H-003 | ✓ | | | ✓ | | | ✓ | ✓ | | |
| 4 | 59244 | 51321-S2H-003 | ✓ | | ✓ | | | | ✓ | ✓ | | |

## HONDA JAZZ 03/02 →

| NR | MAPCO | REF | | | ← | → | ↑ | ↓ | | | NEW | INFO |
|---|---|---|---|---|---|---|---|---|---|---|---|---|
| 1 | 51502 | 51360-SAA-E01 | ✓ | | ✓ | | | ✓ | ✓ | ✓ | | |
| 2 | 51503 | 51350-SAA-E01 | ✓ | | | ✓ | | ✓ | ✓ | ✓ | | |

## HONDA LEGEND I 01/88→12/90

| NR | MAPCO | REF | | | ← | → | ↑ | ↓ | | | NEW | INFO |
|---|---|---|---|---|---|---|---|---|---|---|---|---|
| 1 | 59247 | 53521-SD4-023 | ✓ | | ✓ | ✓ | | | ✓ | ✓ | | M12x1,25 RHT, L= 125 mm |
| 2 | 59333 | 51220-SD4-004 | ✓ | | ✓ | ✓ | | | ✓ | ✓ | | 18mm |
| 3 | 59371 | 53440-SD4-003 | ✓ | | ✓ | | | | ✓ | ✓ | | M12x1,25 RHT Konus 14,0 mm |
| 4 | 59372 | 53540-SD4-003 | ✓ | | | ✓ | | | ✓ | ✓ | | M12x1,25 RHT Konus 14,0 mm |
| 5 | 51506 | 52306-SE0-A00 | | ✓ | ✓ | ✓ | | | ✓ | ✓ | ✓ | |

## HONDA LEGEND II 01/91→02/96

| NR | MAPCO | REF | | | ← | → | ↑ | ↓ | | | NEW | INFO |
|---|---|---|---|---|---|---|---|---|---|---|---|---|
| 1 | 59314 | 53560-SP0-023 | ✓ | | ✓ | | | | ✓ | ✓ | | M14x1,5 RHT |
| 2 | 59249 | 53540-SP0-025 | ✓ | | | ✓ | | | ✓ | ✓ | | M14x1,5 RHT |

## HONDA LEGEND III (KA9) 02/96→

| NR | MAPCO | REF | | | ← | → | ↑ | ↓ | | | NEW | INFO |
|---|---|---|---|---|---|---|---|---|---|---|---|---|
| 1 | 59333 | 51220-SD4-004 | ✓ | | ✓ | ✓ | | | ✓ | ✓ | | 18mm 1 |

## HONDA LOGO 1.3 03/99 → 03/02

| NR | MAPCO | REF | | | ← | → | ↑ | ↓ | | | NEW | INFO |
|---|---|---|---|---|---|---|---|---|---|---|---|---|
| 1 | 59515 | 53450-SX8-T01 | ✓ | | ✓ | ✓ | | | ✓ | ✓ | | |

## HONDA PRELUDE IV (BB) 02/92 → 09/96

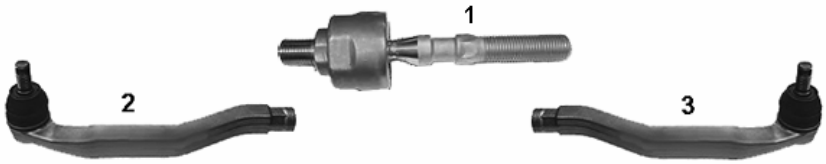


| NR | MAPCO | REF | | | ← | → | ↑ | ↓ | | | NEW | INFO |
|---|---|---|---|---|---|---|---|---|---|---|---|---|
| 1 | 59559 | 53010-SS0-000 | ✓ | | ✓ | ✓ | | | ✓ | ✓ | | |
| 2 | 59315 | 53560-SS0-004 | ✓ | | ✓ | | | | ✓ | ✓ | | |
| 3 | 59311 | 53540-SS0-004 | ✓ | | | ✓ | | | ✓ | ✓ | | |

## HONDA PRELUDE V (BB) 2.0 16V+2.2 16V 10/96 →

| NR | MAPCO | REF | | | ← | → | ↑ | ↓ | | | NEW | INFO |
|---|---|---|---|---|---|---|---|---|---|---|---|---|
| 1 | 59245 | 52320-S30-003 | | ✓ | ✓ | ✓ | | | ✓ | ✓ | | |

## HONDA SHUTTLE (RA) 10/94 → 05/01

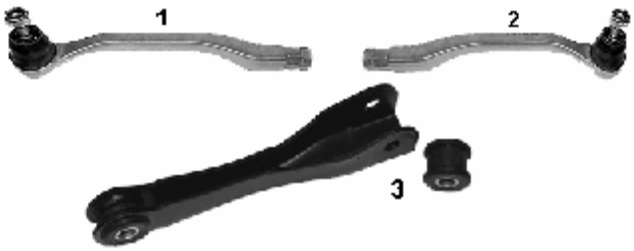


| NR | MAPCO | REF | | | ← | → | ↑ | ↓ | | | NEW | INFO |
|---|---|---|---|---|---|---|---|---|---|---|---|---|
| 1 | 59313 | 53560-SV4-013 | ✓ | | ✓ | | | | ✓ | ✓ | | |
| 2 | 59312 | 53540-SV4-013 | ✓ | | | ✓ | | | ✓ | ✓ | | |
| 3 | 51506 | 52306-SE0-A00 | | ✓ | ✓ | ✓ | | | ✓ | ✓ | ✓ | |

# HYUNDAI

## HYUNDAI ACCENT (X-3) 10/94→01/01

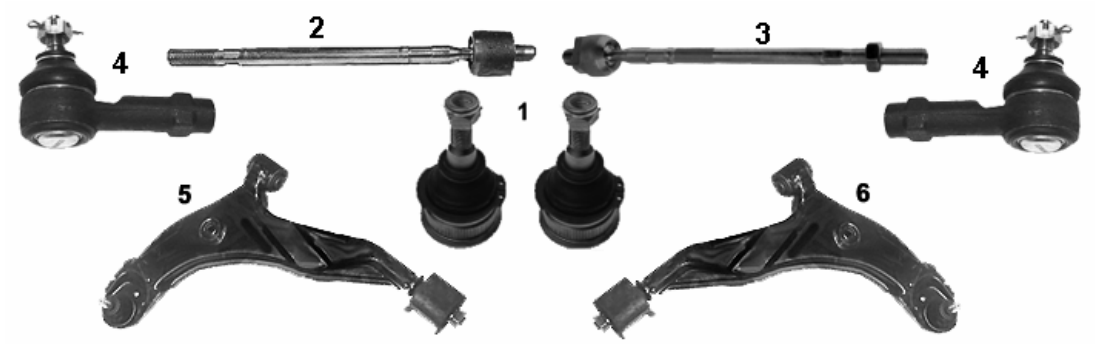


| NR | MAPCO | REF | | | ← | → | ↑ | ↓ | | | NEW | INFO |
|---|---|---|---|---|---|---|---|---|---|---|---|---|
| 1 | **49255** | 54503-22A00 | ✓ | | ✓ | ✓ | | | ✓ | ✓ | | |
| 2 | **59574** | 56540-24001 | ✓ | | ✓ | | | | | ✓ | | |
| 3 | **59570** | 57730-28500 | ✓ | | | ✓ | | | ✓ | | | |
| 4 | **19512** | 56820-28500 | ✓ | | ✓ | ✓ | | | ✓ | ✓ | | M14x1,5RHT |
| 5 | **59292** | 54500-22200 | ✓ | | ✓ | | | | ✓ | ✓ | | |
| 6 | **59291** | 54501-22200 | ✓ | | | ✓ | | | ✓ | ✓ | | |

## HYUNDAI ACCENT (LC) 01/01→

| NR | MAPCO | REF | | | ← | → | ↑ | ↓ | | | NEW | INFO |
|---|---|---|---|---|---|---|---|---|---|---|---|---|
| 1 | **49250** | 54830-25010 | ✓ | | ✓ | | | | ✓ | ✓ | | |
| 2 | **49251** | 54830-25020 | ✓ | | | ✓ | | | ✓ | ✓ | | |
| 3 | **49252** | 55830-25000 | | ✓ | ✓ | ✓ | | | ✓ | ✓ | | |
| 4 | **59571** | 57755-25000 | ✓ | | ✓ | ✓ | | | ✓ | | | |
| 5 | **59572** | 56540-25000 | ✓ | | ✓ | ✓ | | | | ✓ | | |
| 6 | **59586** | 56820-25000 | ✓ | | ✓ | ✓ | | | ✓ | ✓ | | |
| 7 | **49255** | 54503-22A00 | ✓ | | ✓ | ✓ | | | ✓ | ✓ | | |
| 8 | **59376** | 54500-25000 | ✓ | | ✓ | | | | ✓ | ✓ | ✓ | |
| 9 | **59377** | 54501-25000 | ✓ | | | ✓ | | | ✓ | ✓ | ✓ | |
| | | | | | | | | | | | | |

## HYUNDAI AMICA 2000 →

| NR | MAPCO | REF | | | ← | → | ↑ | ↓ | | | NEW | INFO |
|---|---|---|---|---|---|---|---|---|---|---|---|---|
| 1 | **19540** | 56820-28000 | ✓ | | ✓ | ✓ | | | ✓ | ✓ | | M12x1,25 RHT |
| 2 | **59580** | 54530-02050 | ✓ | | ✓ | ✓ | | | ✓ | ✓ | | |

## HYUNDAI ATOS 02/98 →

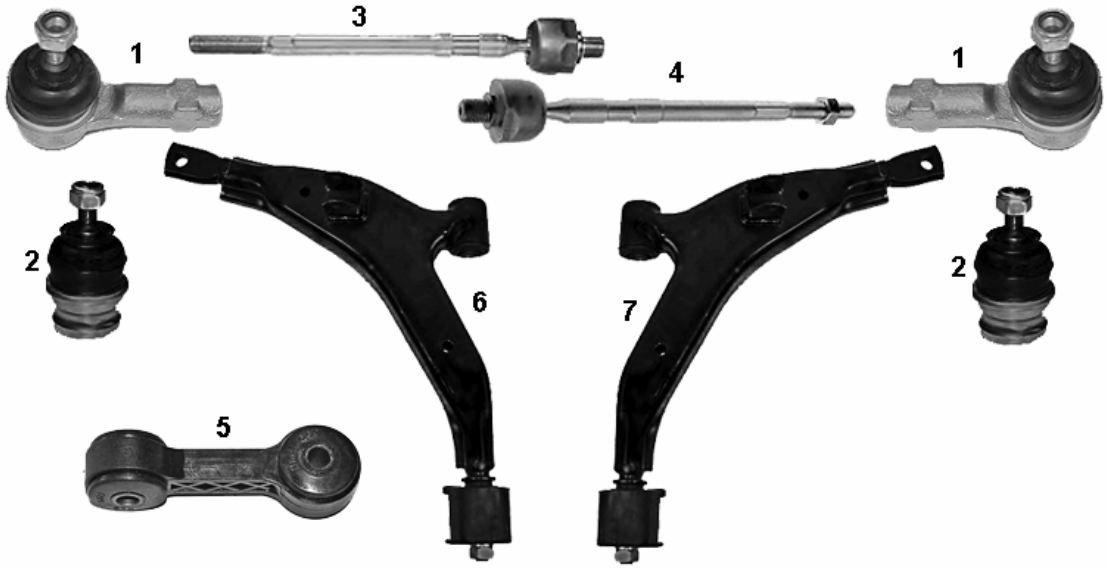


| NR | MAPCO | REF | | | ← | → | ↑ | ↓ | | | NEW | INFO |
|---|---|---|---|---|---|---|---|---|---|---|---|---|
| 1 | **59203** | 56820-02500 | ✓ | | ✓ | ✓ | | | ✓ | ✓ | | M13x1,5RHT |
| 2 | **59580** | 54530-02050 | ✓ | | ✓ | ✓ | | | ✓ | ✓ | | |
| 3 | **59719** | 56540-02000 | ✓ | | ✓ | ✓ | | | | ✓ | | |
| 4 | **59553** | 57755-02000 | ✓ | | ✓ | ✓ | | | ✓ | | | |
| 5 | **51209** | 54820-02000 | ✓ | | ✓ | ✓ | | | ✓ | ✓ | | |
| 6 | **51211** | 54500-02051 | ✓ | | ✓ | | | | ✓ | ✓ | | |
| 7 | **51212** | 54501-02052 | ✓ | | | ✓ | | | ✓ | ✓ | | |

## HYUNDAI COUPE (RD) 1.6 16V, 2.0 16V 06/96→04/02

| NR | MAPCO | REF | | | ← | → | ↑ | ↓ | | | NEW | INFO |
|---|---|---|---|---|---|---|---|---|---|---|---|---|
| 1 | **59550** | 54830-28000 | ✓ | | ✓ | | | | ✓ | ✓ | | |
| 2 | **49254HPS** | 55530-29000 | | ✓ | ✓ | ✓ | | | ✓ | ✓ | | |
| 3 | **59573** | 57730-29001 | ✓ | | ✓ | ✓ | | | ✓ | ✓ | | |

## HYUNDAI COUPE (GK) 2.0 , 2.0 GLS, 2.7 V6 03/02→

| NR | MAPCO | REF | | | ← | → | ↑ | ↓ | | | NEW | INFO |
|---|---|---|---|---|---|---|---|---|---|---|---|---|
| 1 | 59365 | 54830-2C000 | ✓ | | ✓ | | | | ✓ | ✓ | | |
| 2 | 59366 | 54840-2C000 | ✓ | | | ✓ | | | ✓ | ✓ | | |

## HYUNDAI ELANTRA ( XD ) 06/00→

| NR | MAPCO | REF | | | ← | → | ↑ | ↓ | | | NEW | INFO |
|---|---|---|---|---|---|---|---|---|---|---|---|---|
| 1 | 59554 | 57724-2D000 | ✓ | | ✓ | | | | ✓ | ✓ | | 1 |

## HYUNDAI GETZ (TB) 09/02→

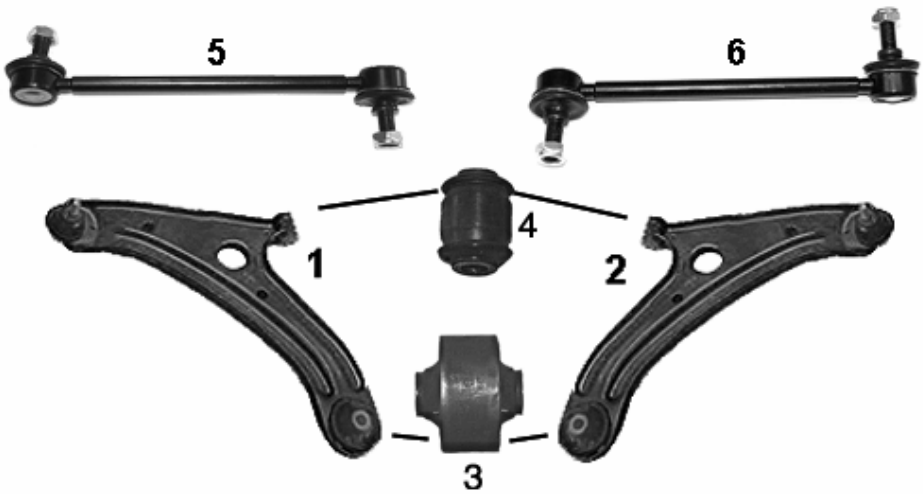


| NR | MAPCO | REF | | | ← | → | ↑ | ↓ | | | NEW | INFO |
|---|---|---|---|---|---|---|---|---|---|---|---|---|
| 1 | 59378 | 54500-1C000 | ✓ | | ✓ | | | | ✓ | ✓ | | |
| 2 | 59379 | 54501-1C010 | ✓ | | | ✓ | | | ✓ | ✓ | | |
| 3 | 33572 | | ✓ | | ✓ | ✓ | | | ✓ | ✓ | | |
| 4 | 33573 | | ✓ | | ✓ | ✓ | | | ✓ | ✓ | | |
| 5 | 59351HPS | 54830-1C000 | ✓ | | ✓ | | | | ✓ | ✓ | ✓ | L: 200,0 mm M10x1,25 |
| 6 | 59355HPS | 54840-1C000 | ✓ | | | ✓ | | | ✓ | ✓ | ✓ | L: 200,0 mm M10x1,25 |

## HYUNDAI H 100 — 1993→03/00

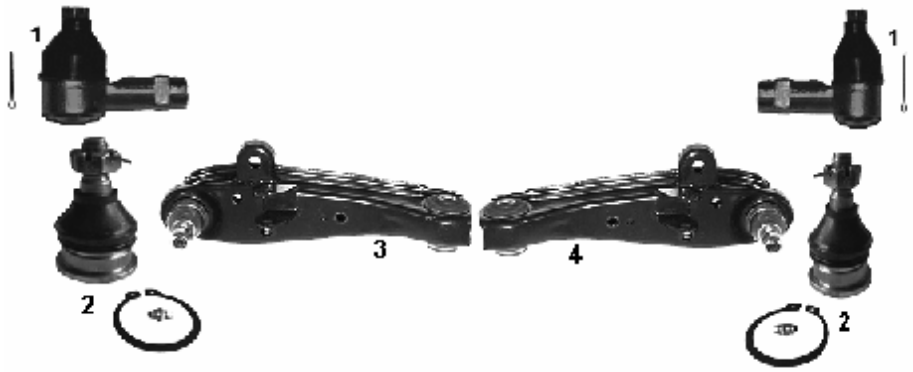


| NR | MAPCO | REF | | | ← | → | ↑ | ↓ | | | NEW | INFO |
|---|---|---|---|---|---|---|---|---|---|---|---|---|
| 1 | **19510** | 56820-21110 | ✓ | | ✓ | ✓ | | | ✓ | ✓ | | M14x1,5 RHT |
| 2 | **19551** | 54524-43301 | ✓ | | ✓ | ✓ | | ✓ | ✓ | ✓ | | |
| 3 | **49940** | 54510-43152 | ✓ | | ✓ | | | ✓ | ✓ | ✓ | | |
| 4 | **49941** | 54540-43150 | ✓ | | | ✓ | | ✓ | ✓ | ✓ | | |

## HYUNDAI LANTRA I (J-1) — 10/90→11/95

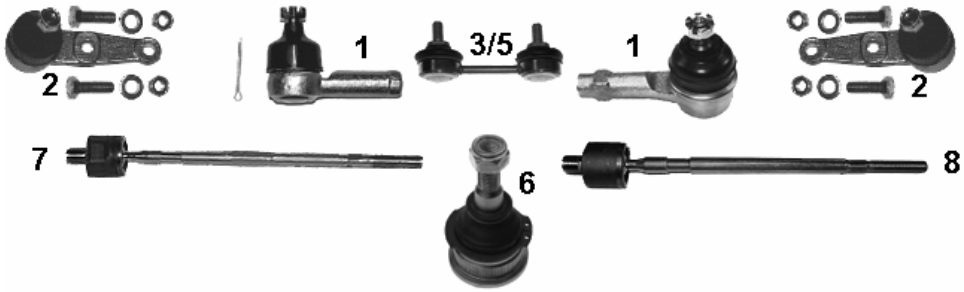


| NR | MAPCO | REF | | | ← | → | ↑ | ↓ | | | NEW | INFO |
|---|---|---|---|---|---|---|---|---|---|---|---|---|
| 1 | **19512** | 56820-28500 | ✓ | | ✓ | ✓ | | | ✓ | ✓ | | M14x1,5RHT |
| 1 | **19540** | 56820-28000 | ✓ | | ✓ | ✓ | | | ✓ | ✓ | | |
| 2 | **19513** | 54530-28A00 | ✓ | | ✓ | ✓ | | | ✓ | ✓ | | M12x1,25RHT |
| 3 | **19514** | 54830-37020 | ✓ | | ✓ | ✓ | | | ✓ | ✓ | | STOP **1.5i** |
| 5 | **59204** | 54830-37010 | ✓ | | ✓ | ✓ | | | ✓ | ✓ | | ✓ **1.5 i.e. , 1.6 i.e. 16V** |
| 6 | **49255** | 54503-22A00 | ✓ | | ✓ | ✓ | | | ✓ | ✓ | | |
| 7 | **59336** | 56540-28020 | ✓ | | ✓ | ✓ | | | ✓ | | | M14x1,5RHT |
| 8 | **59339** | 57730-28000 | ✓ | | ✓ | ✓ | | | ✓ | | | M12x1,25RHT |

## HYUNDAI LANTRA II (J-2) 11/95→09/00

| NR | MAPCO | REF | | | ← | → | ↑ | ↓ | | | NEW | INFO |
|---|---|---|---|---|---|---|---|---|---|---|---|---|
| 1 | **49253** | 54830-29000 | ✓ | | ✓ | ✓ | | | ✓ | ✓ | | |
| 2 | **49254HPS** | 55530-29000 | | ✓ | ✓ | ✓ | | | ✓ | ✓ | | |
| 3 | **49256** | 56820-36000 | ✓ | | ✓ | ✓ | | | ✓ | ✓ | | |
| 4 | **59573** | 57730-29001 | ✓ | | ✓ | ✓ | | | ✓ | ✓ | | L=300mm |
| 5 | **59202** | 56850-28520 | ✓ | | ✓ | ✓ | | | ✓ | ✓ | | ✓ |
| 6 | **59336** | 56540-28020 | ✓ | | ✓ | ✓ | | | ✓ | | | M14x1,5RHT |

## HYUNDAI MATRIX (FC) 06/01→

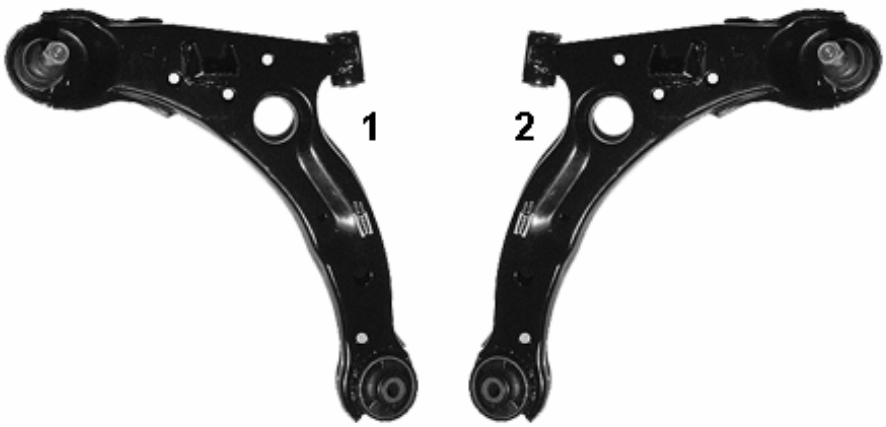


| NR | MAPCO | REF | | | ← | → | ↑ | ↓ | | | NEW | INFO |
|---|---|---|---|---|---|---|---|---|---|---|---|---|
| 1 | **51218** | 54500-17000 | ✓ | | ✓ | | | ✓ | ✓ | ✓ | | |
| 2 | **51219** | 54501-17000 | ✓ | | | ✓ | | ✓ | ✓ | ✓ | | |
| | | | | | | | | | | | | |
| | | | | | | | | | | | | |

## HYUNDAI PONY - EXCEL 1990→1994

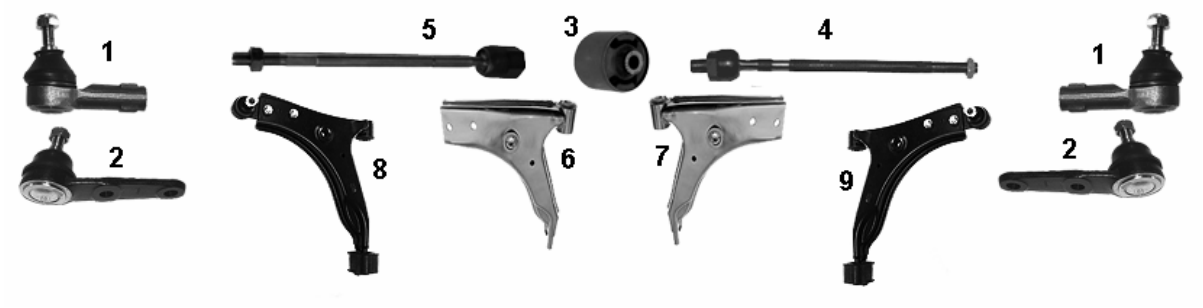


| NR | MAPCO | REF | | | ← | → | ↑ | ↓ | | | NEW | INFO |
|---|---|---|---|---|---|---|---|---|---|---|---|---|
| 1 | **19510** | 56820-21110 | ✓ | | ✓ | ✓ | | | ✓ | ✓ | | M14x1,5 RHT |
| 2 | **19511** | 54530-24A00 | ✓ | | ✓ | ✓ | | | ✓ | ✓ | | |
| 3 | **33510** | 55541-28310 | | ✓ | ✓ | ✓ | | | ✓ | ✓ | | |
| 4 | **19515** | 57730-24000 | ✓ | | ✓ | ✓ | | | | ✓ | | |
| 5 | **59575** | 57730-24100 | ✓ | | ✓ | ✓ | | | ✓ | | | |
| 6 | **59576** | 54502-24001 | ✓ | | ✓ | | | | ✓ | ✓ | | |
| 7 | **59577** | 54503-24001 | ✓ | | | ✓ | | | ✓ | ✓ | | |
| 8 | **59576/1** | 54502-24001 | ✓ | | ✓ | | | | ✓ | ✓ | ✓ | |
| 9 | **59577/1** | 54503-24001 | ✓ | | | ✓ | | | ✓ | ✓ | ✓ | |

## HYUNDAI SANTA-FE (SM) 02/01→

| NR | MAPCO | REF | | | ← | → | ↑ | ↓ | | | NEW | INFO |
|---|---|---|---|---|---|---|---|---|---|---|---|---|
| 1 | **51205** | 54830-26000 | ✓ | | ✓ | | | | ✓ | ✓ | | |
| 2 | **51206** | 54840-26000 | ✓ | | | ✓ | | | ✓ | ✓ | | |
| 3 | **51208** | 55530-26600 | | ✓ | ✓ | | | | ✓ | ✓ | | |
| 4 | **51207** | 55540-26600 | | ✓ | | ✓ | | | ✓ | ✓ | | |

## HYUNDAI SANTAMO 05/99→

| NR | MAPCO | REF | | | ← | → | ↑ | ↓ | | | NEW | INFO |
|---|---|---|---|---|---|---|---|---|---|---|---|---|
| 1 | **51201** | 54830-M2000 | ✓ | | ✓ | | | | ✓ | ✓ | | |
| 4 | **51202** | 54840-M2000 | ✓ | | | ✓ | | | ✓ | ✓ | | |

## HYUNDAI S-COUPE 07/91→05/96

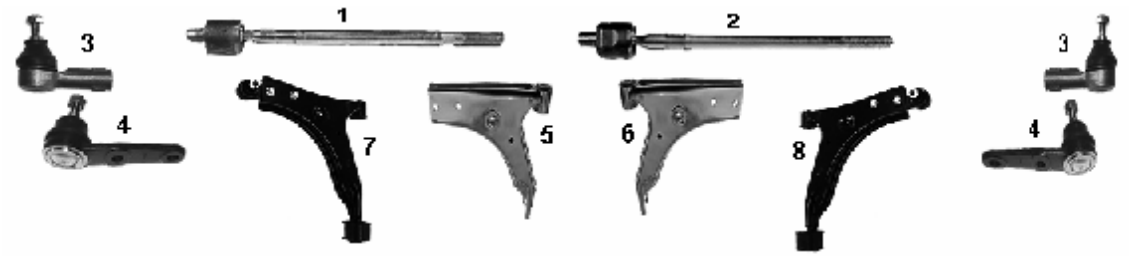


| NR | MAPCO | REF | | | ← | → | ↑ | ↓ | | | NEW | INFO |
|---|---|---|---|---|---|---|---|---|---|---|---|---|
| 1 | **59574** | 56540-24001 | ✓ | | ✓ | ✓ | | | | ✓ | | |
| 2 | **59571** | 57755-25000 | ✓ | | ✓ | ✓ | | | ✓ | | | |
| 3 | **19510** | 56820-21110 | ✓ | | ✓ | ✓ | | | ✓ | ✓ | | M14x1,5 RHT |
| 4 | **19511** | 54530-24A00 | ✓ | | ✓ | ✓ | | | ✓ | ✓ | | |
| 5 | **59576** | 54502-24001 | ✓ | | ✓ | | | | ✓ | ✓ | | |
| 6 | **59577** | 54503-24001 | ✓ | | | ✓ | | | ✓ | ✓ | | |
| 7 | **59576/1** | 54502-24001 | ✓ | | ✓ | | | | ✓ | ✓ | ✓ | |
| 8 | **59577/1** | 54503-24001 | ✓ | | | ✓ | | | ✓ | ✓ | ✓ | |

## HYUNDAI SONATA I (Y-2) 01/91→10/93

| NR | MAPCO | REF | | | ← | → | ↑ | ↓ | | | NEW | INFO |
|---|---|---|---|---|---|---|---|---|---|---|---|---|
| 1 | **49255** | 54503-22A00 | ✓ | | ✓ | ✓ | | | ✓ | ✓ | | |
| 2 | **49256** | 56820-36000 | ✓ | | ✓ | ✓ | | | ✓ | ✓ | | |
| 3 | **59552** | 54830-36101 | | ✓ | ✓ | ✓ | | | ✓ | ✓ | | |

## HYUNDAI SONATA II (Y-3) 05/93→ 06/98

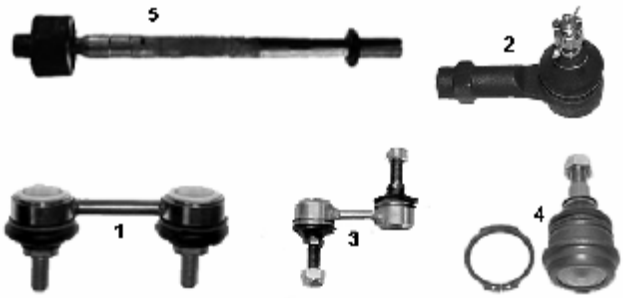


| NR | MAPCO | REF | | | ← | → | ↑ | ↓ | | | NEW | INFO |
|---|---|---|---|---|---|---|---|---|---|---|---|---|
| 1 | **59551** | 54830-34000 | ✓ | | ✓ | ✓ | | | ✓ | ✓ | | |
| 2 | **49256** | 56820-36000 | ✓ | | ✓ | ✓ | | | ✓ | | | |
| 3 | **59581** | 55580-37020 | | ✓ | ✓ | ✓ | | | ✓ | ✓ | | |
| 4 | **59585** | 54503-34A00 | ✓ | | ✓ | ✓ | | | ✓ | ✓ | | |
| 5 | **59555** | 57716-34000 | ✓ | | ✓ | ✓ | | | ✓ | ✓ | | M14x1,5 RHT |

## HYUNDAI SONATA III (EF) 06/98→10/01

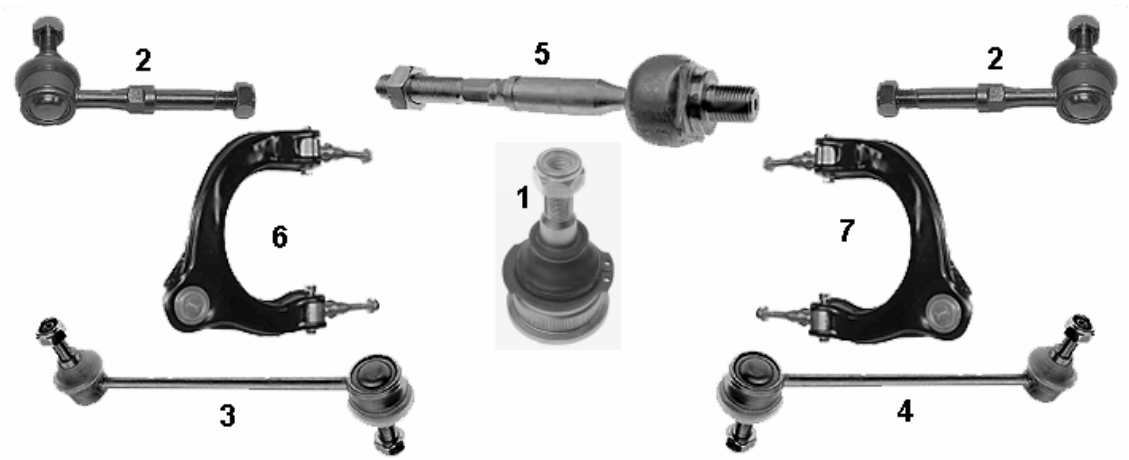


| NR | MAPCO | REF | | | ← | → | ↑ | ↓ | | | NEW | INFO |
|---|---|---|---|---|---|---|---|---|---|---|---|---|
| 1 | **49255** | 54503-22A00 | ✓ | | ✓ | ✓ | | ✓ | ✓ | ✓ | | |
| 2 | **59583** | 54830-38100 | ✓ | | ✓ | ✓ | | | ✓ | ✓ | | 1999→ |
| 3 | **59582** | 55530-38000 | | ✓ | ✓ | ✓ | | | ✓ | ✓ | | 1998→99 |
| 4 | **59584** | 55530-38600 | | ✓ | ✓ | ✓ | | | ✓ | ✓ | | 1999→ |
| 5 | **59556** | 57724-38000 | ✓ | | ✓ | ✓ | | | ✓ | | | M14x1,5RHT |
| 6 | **59382** | 54410-38000 | ✓ | | ✓ | | ✓ | | ✓ | ✓ | | |
| 7 | **59383** | 54420-38000 | ✓ | | | ✓ | ✓ | | ✓ | ✓ | | |
| | | | | | | | | | | | | |

## HYUNDAI SONATA IV 10/01→

| NR | MAPCO | REF | | | ← | → | ↑ | ↓ | | | NEW | INFO |
|---|---|---|---|---|---|---|---|---|---|---|---|---|
| 1 | **59384** | 54500-38011 | ✓ | | ✓ | | | ✓ | ✓ | ✓ | | |
| 2 | **59385** | 54501-38011 | ✓ | | | ✓ | | ✓ | ✓ | ✓ | | |
| 3 | **59382** | 54410-38000 | ✓ | | ✓ | | ✓ | | ✓ | ✓ | | |
| 4 | **59383** | 54420-38000 | ✓ | | | ✓ | ✓ | | ✓ | ✓ | | |
| 5 | **51215** | 55210-38000 | | ✓ | ✓ | ✓ | | | ✓ | ✓ | | |
| | | | | | | | | | | | | |

## HYUNDAI STAREX 06/97 →
## HYUNDAI H-1 10/97 →

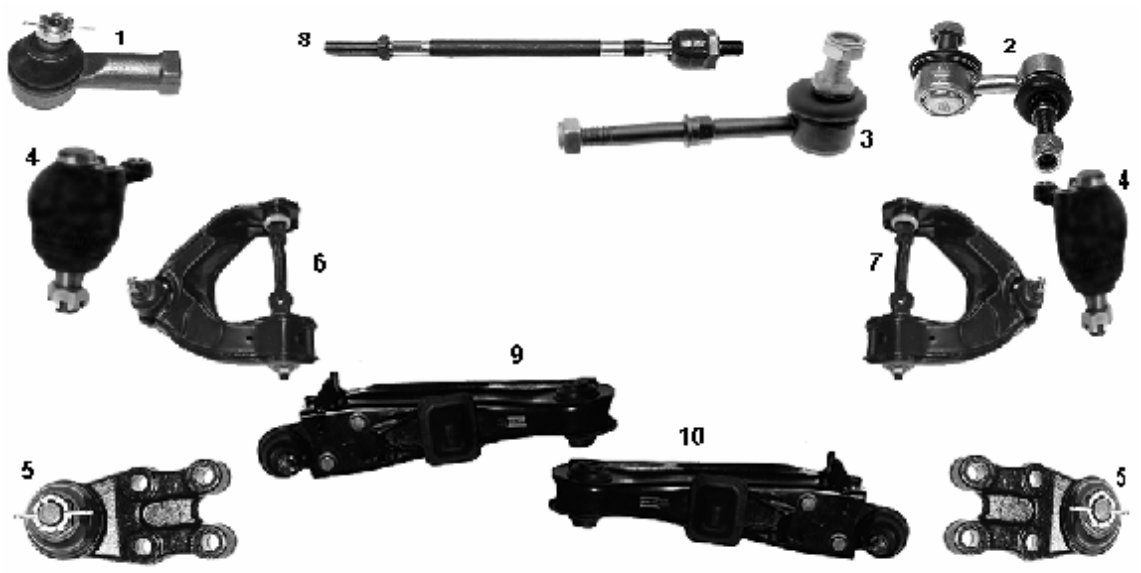


| NR | MAPCO | REF | | | ← | → | ↑ | ↓ | | | NEW | INFO |
|---|---|---|---|---|---|---|---|---|---|---|---|---|
| 1 | 59205 | 56872-43010 | ✓ | | ✓ | ✓ | | | ✓ | ✓ | | 10/97→ |
| 2 | 59578 | 54830-4A002 | ✓ | | ✓ | ✓ | | | ✓ | ✓ | | |
| 3 | 59579 | 55530-4A000 | | ✓ | ✓ | ✓ | | | ✓ | ✓ | | |
| 4 | 59327 | 54417-4AA00 | ✓ | | ✓ | ✓ | ✓ | | ✓ | ✓ | | |
| 5 | 59329 | 54530-4AA00 | ✓ | | ✓ | ✓ | | ✓ | ✓ | ✓ | | |
| 6 | 59386 | 54400-4A000 | ✓ | | ✓ | | ✓ | | ✓ | ✓ | | Lenkerarm / wishbone arm |
| 7 | 59387 | 54401-4A000 | ✓ | | | ✓ | ✓ | | ✓ | ✓ | | Lenkerarm / wishbone arm |
| 8 | 51210 | 57729-4A000 | ✓ | | ✓ | ✓ | | | ✓ | ✓ | | M14x1,5 292 mm |
| 9 | 51216 | 54500-4A000 | ✓ | | ✓ | | | ✓ | ✓ | ✓ | | |
| 10 | 51217 | 54501-4A000 | ✓ | | | ✓ | | ✓ | ✓ | ✓ | | |

## HYUNDAI TRAJET (FO) 04/01→

| NR | MAPCO | REF | | | ← | → | ↑ | ↓ | | | NEW | INFO |
|---|---|---|---|---|---|---|---|---|---|---|---|---|
| 1 | 51203 | 54830-3A000 | ✓ | | ✓ | | | | ✓ | ✓ | | |
| 4 | 51204 | 54840-3A000 | ✓ | | | ✓ | | | ✓ | ✓ | | |

## HYUNDAI XG 12/98→

| NR | MAPCO | REF | | | ← | → | ↑ | ↓ | | | NEW | INFO |
|---|---|---|---|---|---|---|---|---|---|---|---|---|
| 1 | 59556 | 57724-38000 | ✓ | | ✓ | ✓ | | | ✓ | ✓ | | M14x1,5RHT 1 |

# ISUZU

## ISUZU CAMPO (KB) 01/83→12/90

| NR | MAPCO | REF | | | ← | → | ↑ | ↓ | | | NEW | INFO |
|---|---|---|---|---|---|---|---|---|---|---|---|---|
| 1 | 49616 | 8-94459-464-1 | ✓ | | ✓ | ✓ | | ✓ | ✓ | ✓ | | 1 |

## ISUZU TROOPER (UBS) 03/84→12/91

| NR | MAPCO | REF | | | ← | → | ↑ | ↓ | | | NEW | INFO |
|---|---|---|---|---|---|---|---|---|---|---|---|---|
| 1 | 59290 | 89422-45503 | ✓ | | ✓ | ✓ | ✓ | | ✓ | ✓ | | |
| 2 | 49616 | 8-94459-464-1 | ✓ | | ✓ | ✓ | | ✓ | ✓ | ✓ | | |

## ISUZU TROOPER (_B_) 08/91 →

| NR | MAPCO | REF | | | ← | → | ↑ | ↓ | | | NEW | INFO |
|---|---|---|---|---|---|---|---|---|---|---|---|---|
| 1 | 19811HPS | 8-97018-228-2 | ✓ | | ✓ | | | | ✓ | ✓ | | |
| 2 | 59849 | 8-97018-227-2 | ✓ | | | ✓ | | | ✓ | ✓ | | |

## ISUZU TROOPER 04/00 →

| NR | MAPCO | REF | | | ← | → | ↑ | ↓ | | | NEW | INFO |
|---|---|---|---|---|---|---|---|---|---|---|---|---|
| 1 | 51594HPS | 8-97018-125-2 | | ✓ | ✓ | ✓ | | | ✓ | ✓ | ✓ | 1 |

# IVECO

## IVECO DAYLY I + II 01/96→

| NR | MAPCO | REF | | | ← | → | ↑ | ↓ | | | NEW | INFO |
|---|---|---|---|---|---|---|---|---|---|---|---|---|
| 1 | 19404 | 998 3325 | ✓ | | ✓ | ✓ | | | ✓ | ✓ | | 1 |

# JAGUAR

## JAGUAR XJ SERIE III →1988
## JAGUAR XJ SERIE 40 →1997

| NR | MAPCO | REF | | | ← | → | ↑ | ↓ | | | NEW | INFO |
|---|---|---|---|---|---|---|---|---|---|---|---|---|
| 1 | 49648 | CAC 9938 | ✓ | | ✓ | ✓ | ✓ | | ✓ | ✓ | | |
| 2 | 49649 | CAC 9937 | ✓ | | ✓ | ✓ | | ✓ | ✓ | ✓ | | |

# JEEP

## JEEP GRAND CHEROKEE 09/91→04/99

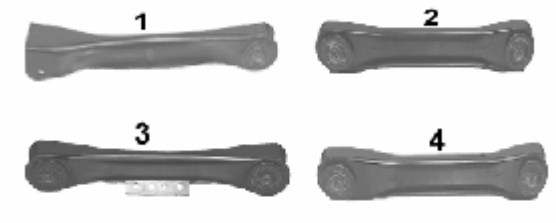


| NR | MAPCO | REF | | | ← | → | ↑ | ↓ | | | NEW | INFO |
|---|---|---|---|---|---|---|---|---|---|---|---|---|
| 1 | 49932 | 52087710 | ✓ | | ✓ | ✓ | | ✓ | ✓ | ✓ | | |
| 2 | 49933 | 52088312 | ✓ | | ✓ | ✓ | | ✓ | ✓ | ✓ | | |
| 3 | 49934 | 52088520 | | ✓ | ✓ | ✓ | ✓ | | ✓ | ✓ | | |
| 4 | 49935 | 52088521 | | ✓ | ✓ | ✓ | | ✓ | ✓ | ✓ | | |

## JEEP WRANGLER II 08/96→2001

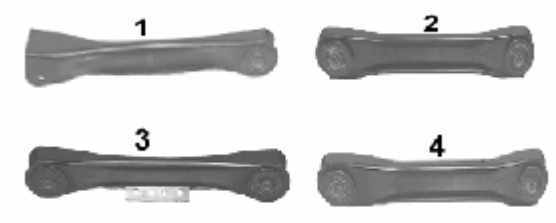


| NR | MAPCO | REF | | | ← | → | ↑ | ↓ | | | NEW | INFO |
|---|---|---|---|---|---|---|---|---|---|---|---|---|
| 1 | 49932 | 52087710 | ✓ | | ✓ | ✓ | | ✓ | ✓ | ✓ | | |
| 2 | 49933 | 52088312 | ✓ | | ✓ | ✓ | | ✓ | ✓ | ✓ | | |
| 3 | 49934 | 52088520 | | ✓ | ✓ | ✓ | ✓ | | ✓ | ✓ | | |
| 4 | 49935 | 52088521 | | ✓ | ✓ | ✓ | | ✓ | ✓ | ✓ | | |

# KIA

## KIA CLARUS (K9A) 07/96→

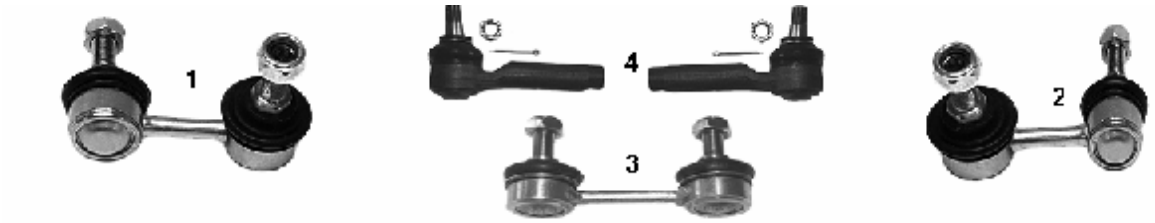


| NR | MAPCO | REF | | | ← | → | ↑ | ↓ | | | NEW | INFO |
|---|---|---|---|---|---|---|---|---|---|---|---|---|
| 1 | 59590 | KGA2A-34-170A | ✓ | | ✓ | | | | ✓ | ✓ | | |
| 2 | 59591 | KGA2A-34-150A | ✓ | | | ✓ | | | ✓ | ✓ | | |
| 3 | 59592 | 0K0A3-28-170A | | ✓ | ✓ | ✓ | | | ✓ | ✓ | | |
| 4 | 59342 | 0K9A2-32-280 | ✓ | | ✓ | ✓ | | | ✓ | ✓ | | |

## KIA JOICE 2.0 02/00→

| NR | MAPCO | REF | | | ← | → | ↑ | ↓ | | | NEW | INFO |
|---|---|---|---|---|---|---|---|---|---|---|---|---|
| 1 | 51201 | 54830-M2000 | ✓ | | ✓ | | | | ✓ | ✓ | | |
| 2 | 51202 | 54840-M2000 | ✓ | | | ✓ | | | ✓ | ✓ | | |

## KIA MAGENTIS (GD) 05/01→

| NR | MAPCO | REF | | | ← | → | ↑ | ↓ | | | NEW | INFO |
|---|---|---|---|---|---|---|---|---|---|---|---|---|
| 1 | 51215 | 55210-38000 | | ✓ | ✓ | ✓ | | | ✓ | ✓ | | |

## KIA PRIDE (DA) 01/90→

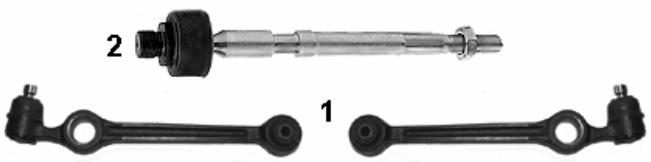


| NR | MAPCO | REF | | | ← | → | ↑ | ↓ | | | NEW | INFO |
|---|---|---|---|---|---|---|---|---|---|---|---|---|
| 1 | 51531 | KKY01-34-390A | ✓ | | ✓ | | ✓ | | ✓ | ✓ | | |
| 2 | 51533 | KK150-32-240 | ✓ | | ✓ | ✓ | | | ✓ | ✓ | | M12x1,5RHT |

## KIA SEPHIA (FA) 09/93→ 10/97

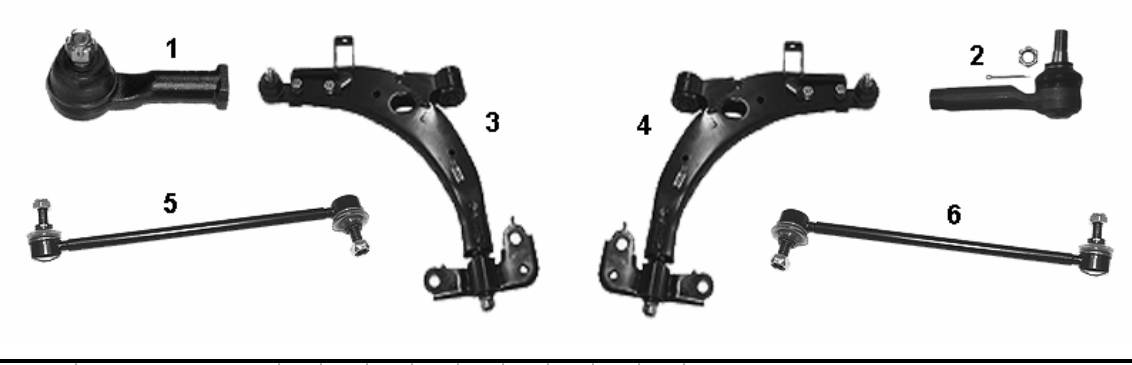


| NR | MAPCO | REF | | | ← | → | ↑ | ↓ | | | NEW | INFO |
|---|---|---|---|---|---|---|---|---|---|---|---|---|
| 1 | 49518 | OK201-32-280 | ✓ | | ✓ | ✓ | | | | ✓ | | |
| 2 | 59342 | 0K9A2-32-280 | ✓ | | ✓ | ✓ | | | ✓ | | | |
| 3 | 51582 | OK2A1-34-350B | ✓ | | ✓ | | | | ✓ | ✓ | ✓ | |
| 4 | 51583 | OK2A1-34-300B | ✓ | | | ✓ | | | ✓ | ✓ | ✓ | |
| 5 | 59344HPS | 0K2N1-34-170A | ✓ | | ✓ | | | | ✓ | ✓ | ✓ | |
| 6 | 59341HPS | 0K2N1-34-150A | ✓ | | | ✓ | | | ✓ | ✓ | ✓ | |

## KIA SHUMA (FB) 1.5i + 1.8i 16V 10/97→

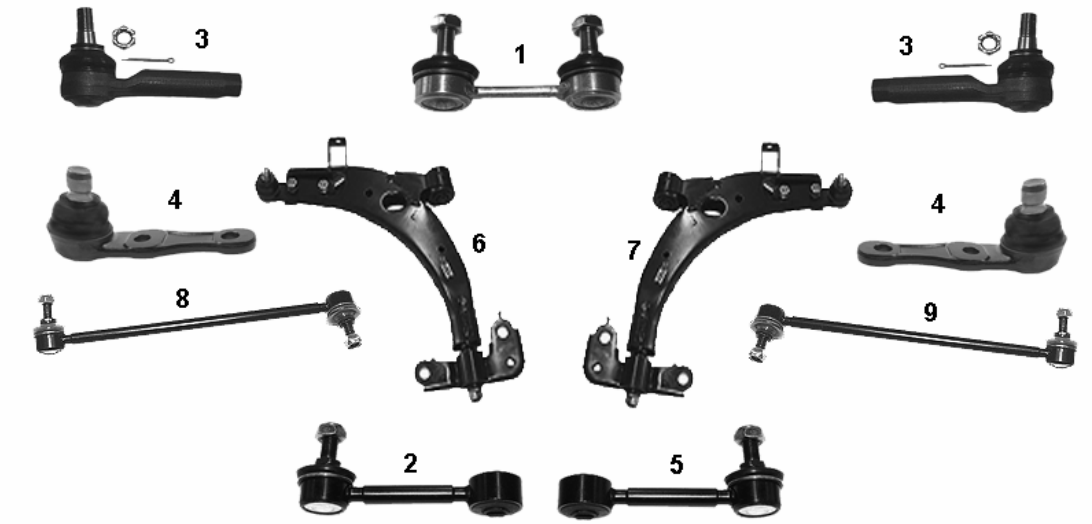


| NR | MAPCO | REF | | | ← | → | ↑ | ↓ | | | NEW | INFO |
|---|---|---|---|---|---|---|---|---|---|---|---|---|
| 1 | 59589 | 0K2A5-34-150A | ✓ | | ✓ | ✓ | | | ✓ | ✓ | | |
| 2 | 59594 | 0K2A1-34-150A | | ✓ | ✓ | ✓ | | | ✓ | ✓ | | |
| 3 | 59342 | 0K9A2-32-280 | ✓ | | ✓ | ✓ | | | ✓ | ✓ | | |
| 4 | 59346 | 0K2A1-34-550A | ✓ | | ✓ | ✓ | | ✓ | ✓ | ✓ | | |
| 5 | 59343 | 0K2A1-28-150B | | ✓ | ✓ | ✓ | | | ✓ | ✓ | | |
| 6 | 51582 | OK2A1-34-350 | ✓ | | ✓ | | | | ✓ | ✓ | ✓ | |
| 7 | 51583 | OK2A1-34-300 | ✓ | | | ✓ | | | ✓ | ✓ | ✓ | |
| 8 | 59344HPS | 0K2N1-34-170A | ✓ | | ✓ | | | | ✓ | ✓ | ✓ | |
| 9 | 59341HPS | 0K2N1-34-150A | ✓ | | | ✓ | | | ✓ | ✓ | ✓ | |

## KIA SORENTO (JC) 08/02→

| NR | MAPCO | REF | | | ← | → | ↑ | ↓ | | | NEW | INFO |
|---|---|---|---|---|---|---|---|---|---|---|---|---|
| 1 | 51532 | 54810 3E000 | ✓ | | ✓ | ✓ | | | ✓ | ✓ | | |
| | | | | | | | | | | | | |

## KIA SPORTAGE (K00) 04/94→

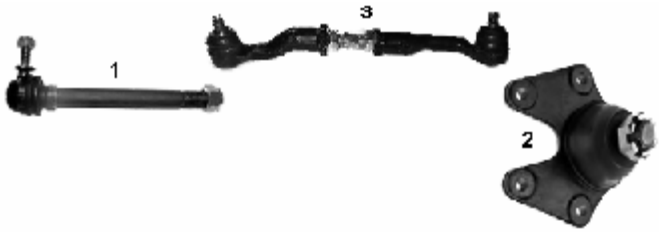


| NR | MAPCO | REF | | | ← | → | ↑ | ↓ | | | NEW | INFO |
|---|---|---|---|---|---|---|---|---|---|---|---|---|
| 1 | 59345 | 0K011-34-160A | ✓ | | ✓ | ✓ | | | ✓ | ✓ | | |
| 2 | 59337 | 0K011-34-510B | ✓ | | ✓ | ✓ | | | ✓ | ✓ | | |
| 3 | 59230 | OK011-32-270A | ✓ | | ✓ | ✓ | | | ✓ | ✓ | | |
| | | | | | | | | | | | | |

# LADA

## LADA SHIGULI 1200-1300-1500-1600
## LADA VAZ 2101-1200 1972→02/93

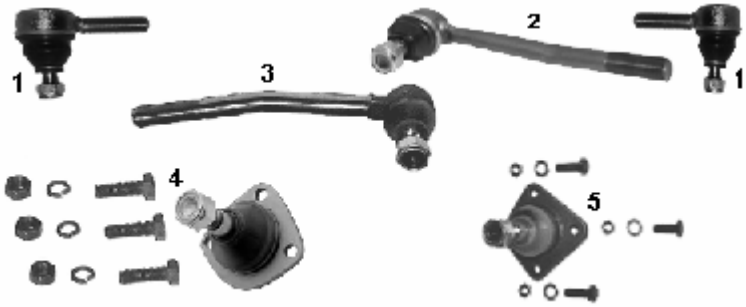


| NR | MAPCO | REF | | | ← | → | ↑ | ↓ | | | NEW | INFO |
|---|---|---|---|---|---|---|---|---|---|---|---|---|
| 1 | 19080 | 21013003057 | ✓ | | ✓ | ✓ | | | | ✓ | | M16x1RHT aussen/ outside |
| 2 | 19082 | 21013003064 | ✓ | | ✓ | ✓ | | | | ✓ | | M16x1RHT innen/ inner |
| 3 | 19081 | 21013003050 | ✓ | | ✓ | ✓ | | | | ✓ | | M16x1RHT innen/ inner |
| 4 | 19085 | 21012904185 | ✓ | | ✓ | ✓ | | | | ✓ | | |
| 5 | 19084 | 21012904063 | ✓ | | ✓ | ✓ | | | | ✓ | | |

## LADA NIVA 1975→

| NR | MAPCO | REF | | | ← | → | ↑ | ↓ | | | NEW | INFO |
|---|---|---|---|---|---|---|---|---|---|---|---|---|
| 1 | 19080 | 21013003057 | ✓ | | ✓ | ✓ | | | | ✓ | | M16x1RHT aussen/ outside |
| 2 | 19085 | 21012904185 | ✓ | | ✓ | ✓ | ✓ | ✓ | | ✓ | | |

## LADA SAMARA 1985→

| NR | MAPCO | REF | | | ← | → | ↑ | ↓ | | | NEW | INFO |
|---|---|---|---|---|---|---|---|---|---|---|---|---|
| 1 | 19090 | 21083414057 | ✓ | | ✓ | | | | | ✓ | | M18x1,5LHT |
| 2 | 19089 | 21083414056 | ✓ | | | ✓ | | | | ✓ | | M18x1,5LHT |
| 3 | 19091 | 21082904185 | ✓ | | ✓ | ✓ | ✓ | | | ✓ | | |

## LADA 110, 111, 112 01/95→

| NR | MAPCO | REF | | | ← | → | ↑ | ↓ | | | NEW | INFO |
|---|---|---|---|---|---|---|---|---|---|---|---|---|
| 1 | 19092 | 21103414057 | ✓ | | ✓ | | | | ✓ | ✓ | | M18x1,5 LHT |
| 2 | 19093 | 21103414056 | ✓ | | | ✓ | | | ✓ | ✓ | | M18x1,5 LHT |

# LANCIA

## LANCIA AUTOBIANCHI Y10 + Y10 4x4 — 1985→12/95

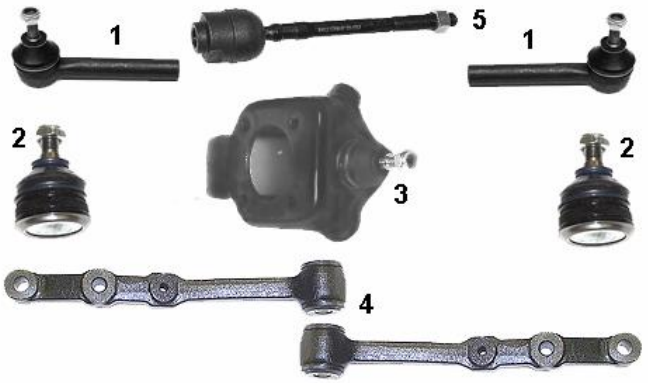


| NR | MAPCO | REF | | | ← | → | ↑ | ↓ | | | NEW | INFO |
|---|---|---|---|---|---|---|---|---|---|---|---|---|
| 1 | 19047 | 5958246 | ✓ | | ✓ | ✓ | | | | ✓ | | M12x1,5RHT |
| 2 | 19044 | 4402649 | ✓ | | ✓ | ✓ | | | | ✓ | | |
| 3 | 19048 | 4403138 | ✓ | | ✓ | ✓ | | | | ✓ | | |
| 4 | 19045 | 4402672 | ✓ | | ✓ | ✓ | | | | ✓ | | |
| 5 | 19452 | 5960321 | ✓ | | ✓ | ✓ | | | | ✓ | ✓ | M12x1,5RH |

## LANCIA DEDRA — 1990→07/99
## LANCIA DELTA — 1993→08/99

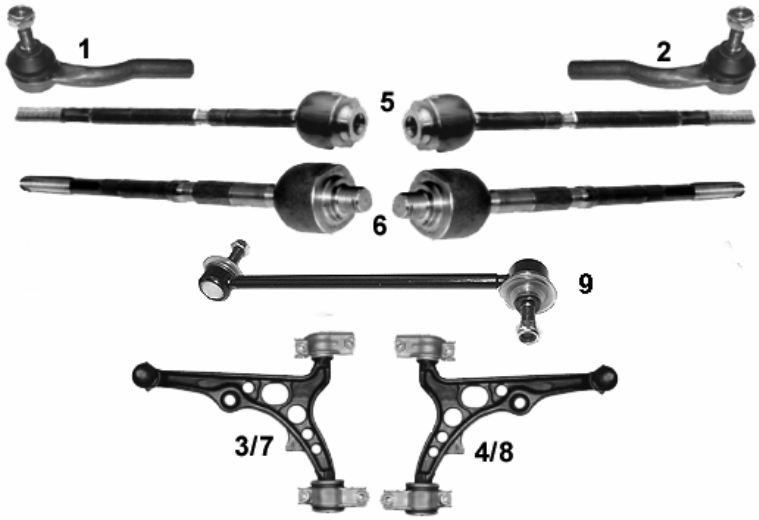


| NR | MAPCO | REF | | | ← | → | ↑ | ↓ | | | NEW | INFO |
|---|---|---|---|---|---|---|---|---|---|---|---|---|
| 1 | 19052 | 7591216 | ✓ | | ✓ | | | | ✓ | ✓ | | M12x1,5RHT |
| 2 | 19053 | 7591215 | ✓ | | | ✓ | | | ✓ | ✓ | | M12x1,5RHT |
| 3 | 19056 | 82461081 | ✓ | | ✓ | | | | ✓ | ✓ | | ✓ DELTA 46474556, ✓ TD |
| 4 | 19057 | 82461082 | ✓ | | | ✓ | | | ✓ | ✓ | | ✓ DELTA 46474556, ✓ TD |
| 5 | 19043 | 7633221 | ✓ | | ✓ | ✓ | | | | ✓ | | M12x1,5RHT |
| 6 | 19022 | 9941625 | ✓ | | ✓ | ✓ | | | ✓ | | | M12x1,5RHT |
| 7 | 19009 | 46423822 | ✓ | | ✓ | | | | ✓ | ✓ | | ✓ DEDRA, STOP TD |
| 8 | 19010 | 46423823 | ✓ | | | ✓ | | | ✓ | ✓ | | ✓ DEDRA, STOP TD |
| 9 | 19026HPS | 46413122 | ✓ | | ✓ | ✓ | | | ✓ | ✓ | | ✓ DEDRA |

## LANCIA KAPPA 1994→10/01

| NR | MAPCO | REF | | | ← | → | ↑ | ↓ | | | NEW | INFO |
|---|---|---|---|---|---|---|---|---|---|---|---|---|
| 1 | 19059 | 82387676 | ✓ | | ✓ | ✓ | | | ✓ | ✓ | | M14x1,5RHT |
| 2 | 49014 | 82480099 | ✓ | | ✓ | ✓ | | | ✓ | ✓ | | |

## LANCIA MUSA 10/04→

| NR | MAPCO | REF | | | ← | → | ↑ | ↓ | | | NEW | INFO |
|---|---|---|---|---|---|---|---|---|---|---|---|---|
| 1 | 49059 | 77362503 | ✓ | | ✓ | ✓ | | | ✓ | ✓ | | M14x1,5RHT 1 |

## LANCIA PHEDRA (179) 09/02→

| NR | MAPCO | REF | | | ← | → | ↑ | ↓ | | | NEW | INFO |
|---|---|---|---|---|---|---|---|---|---|---|---|---|
| 1 | 19376HPS | 13312 09080 | ✓ | | ✓ | ✓ | | | ✓ | ✓ | | |
| 2 | 19492 | 773 662 79 | ✓ | | ✓ | ✓ | | | ✓ | ✓ | | M14x1,5 |

## LANCIA THEMA 03/84→07/94

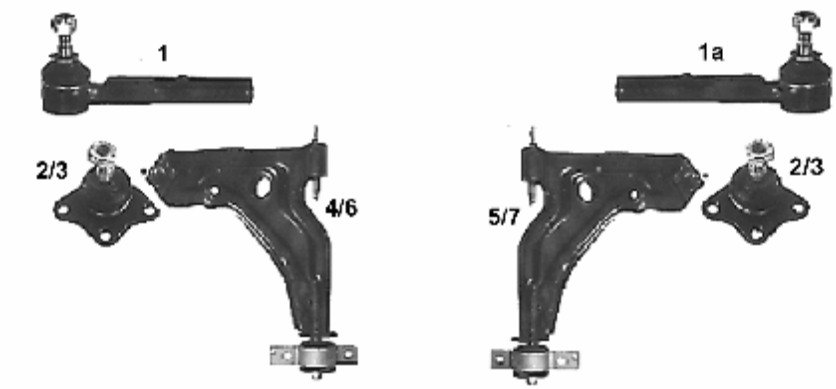


| NR | MAPCO | REF | | | ← | → | ↑ | ↓ | | | NEW | INFO |
|---|---|---|---|---|---|---|---|---|---|---|---|---|
| 1 | 19058 | 82392503 | ✓ | | ✓ | ✓ | | | ✓ | ✓ | | M12x1,5RHT,→03/86 |
| 1a | 19059 | 82387676 | ✓ | | ✓ | ✓ | | | ✓ | ✓ | | M14x1,5RHT,04/86→ |
| 2 | 19060 | 82398170 | ✓ | | ✓ | ✓ | | | ✓ | ✓ | | Ø 13 mm,→12/91 |
| 3 | 19008 | 82420623 | ✓ | | ✓ | ✓ | | | ✓ | ✓ | | Ø 15 mm,01/92→ |
| 4 | 19061 | 82446499 | ✓ | | ✓ | | | | ✓ | ✓ | | Ø 13 mm,→12/91 |
| 5 | 19062 | 82446498 | ✓ | | | ✓ | | | ✓ | ✓ | | Ø 13 mm,→12/91 |
| 6 | 19020 | 82480039 | ✓ | | ✓ | | | | ✓ | ✓ | | Ø 15 mm,1992→ |
| 7 | 19021 | 82480038 | ✓ | | | ✓ | | | ✓ | ✓ | | Ø 15 mm,1992→ |

## LANCIA Y (840A) 11/95→

| NR | MAPCO | REF | | | ← | → | ↑ | ↓ | | | NEW | INFO |
|---|---|---|---|---|---|---|---|---|---|---|---|---|
| 1 | 19066 | 46430002<br>7750977 | ✓ | | ✓ | ✓ | | | ✓ | ✓ | | |
| 2 | 19067 | 46430003<br>7750978 | ✓ | | ✓ | ✓ | | | ✓ | ✓ | | |
| 3 | 33005 | 46476755 | | ✓ | ✓ | ✓ | | | ✓ | ✓ | | |
| 4 | 34053 | 17736515 | | ✓ | ✓ | ✓ | | | ✓ | ✓ | | |
| 5 | 33039 | 7755671 | | ✓ | ✓ | ✓ | | | ✓ | ✓ | | vorn/front |
| 6 | 33040 | 7756218 | | ✓ | ✓ | ✓ | | | ✓ | ✓ | | hinten/rear |

## LANCIA ZETA 1994→09/02

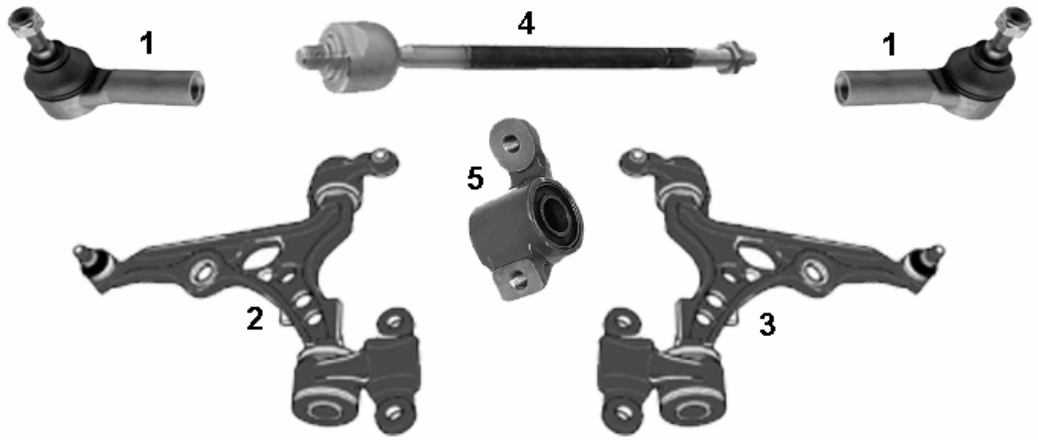


| NR | MAPCO | REF | | | ← | → | ↑ | ↓ | | | NEW | INFO |
|---|---|---|---|---|---|---|---|---|---|---|---|---|
| 1 | 19078 | 1306003080 | ✓ | | ✓ | ✓ | | | ✓ | ✓ | | M14x1,5RHT |
| 2 | 19076 | 1313083080 | ✓ | | ✓ | | | | ✓ | ✓ | | ✓ D, TD |
| 3 | 19077 | 1313084080 | ✓ | | | ✓ | | | ✓ | ✓ | | ✓ D, TD |
| 4 | 19023 | 9566950880 | ✓ | | ✓ | ✓ | | | ✓ | ✓ | | |
| 5 | 33017 | 1312317080 | ✓ | | ✓ | ✓ | | | ✓ | ✓ | | |

# LANDROVER

## LANDROVER 90 — 1984→1990

| NR | MAPCO | REF | | | ← | → | ↑ | ↓ | | | NEW | INFO |
|---|---|---|---|---|---|---|---|---|---|---|---|---|
| 1 | 59680 | NRC 4745 | ✓ | | ✓ | | | | ✓ | ✓ | | 11/16"x16 LHT |
| 2 | 59681 | NRC 6007 | ✓ | | | ✓ | | | ✓ | ✓ | | 11/16"x16 LHT |
| 3 | 59682 | 572 337 | ✓ | | ✓ | ✓ | ✓ | | ✓ | ✓ | | |
| 4 | 59683 | 575 882 | ✓ | | ✓ | ✓ | | ✓ | ✓ | ✓ | | |

## LANDROVER DEFENDER (LD) 2.5 90TDI — 09/90→
## LANDROVER DEFENDER (LD) 2.5 + 3.9 V8 — 09/90→

| NR | MAPCO | REF | | | ← | → | ↑ | ↓ | | | NEW | INFO |
|---|---|---|---|---|---|---|---|---|---|---|---|---|
| 1 | 59678 | NTC 1888 | ✓ | ✓ | ✓ | ✓ | | | ✓ | ✓ | | 1 |
| | | | | | | | | | | | | |

## LANDROVER DISCOVERY I — 1994→1999

| NR | MAPCO | REF | | | ← | → | ↑ | ↓ | | | NEW | INFO |
|---|---|---|---|---|---|---|---|---|---|---|---|---|
| 1 | 59680 | NRC 4745 | ✓ | | ✓ | | | | ✓ | ✓ | | 11/16"x16 LHT |
| 2 | 59681 | NRC 6007 | ✓ | | | ✓ | | | ✓ | ✓ | | 11/16"x16 LHT |
| 3 | 59682 | 572 337 | ✓ | | ✓ | ✓ | ✓ | | ✓ | ✓ | | |
| 4 | 59683 | 575 882 | ✓ | | ✓ | ✓ | | ✓ | ✓ | ✓ | | |

## LANDROVER FREELANDER 1997→

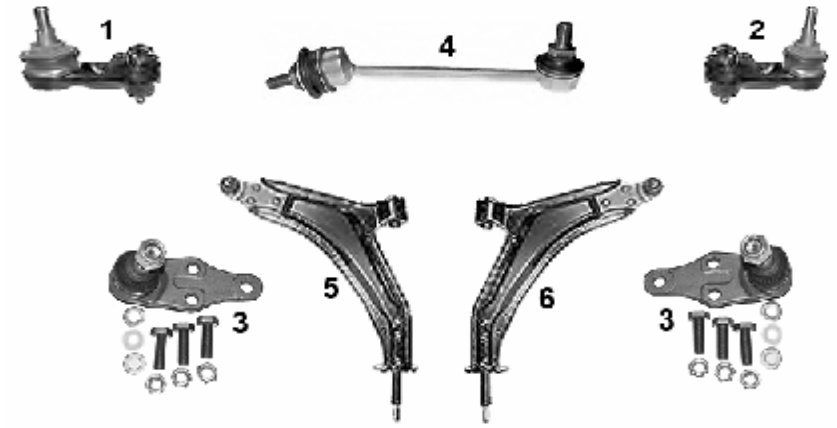


| NR | MAPCO | REF | | | ← | → | ↑ | ↓ | | | NEW | INFO |
|---|---|---|---|---|---|---|---|---|---|---|---|---|
| 1 | 59684 | JQB 100230 | ✓ | | ✓ | | | | ✓ | ✓ | | M18x1,5LHT |
| 2 | 59685 | JQB 100220 | ✓ | | | ✓ | | | ✓ | ✓ | | M18x1,5LHT |
| 3 | 59686 | | ✓ | | ✓ | ✓ | | ✓ | ✓ | ✓ | | |
| 4 | 59687 | RBM 100172 | ✓ | | ✓ | ✓ | | | ✓ | ✓ | | |
| 5 | 59688 | RBJ 102450 | ✓ | | ✓ | | | | ✓ | ✓ | | |
| 6 | 59689 | RBJ 102440 | ✓ | | | ✓ | | | ✓ | ✓ | | |

## LANDROVER RANGE ROVER I 07/70→ 07/94

| NR | MAPCO | REF | | | ← | → | ↑ | ↓ | | | NEW | INFO |
|---|---|---|---|---|---|---|---|---|---|---|---|---|
| 1 | 59680 | NRC 4745 | ✓ | | ✓ | | | | ✓ | ✓ | | 11/16"x16 LHT |
| 2 | 59681 | NRC 6007 | ✓ | | | ✓ | | | ✓ | ✓ | | 11/16"x16 LHT |
| 3 | 59682 | 572 337 | ✓ | | ✓ | ✓ | ✓ | | ✓ | ✓ | | |
| 4 | 59683 | 575 882 | ✓ | | ✓ | ✓ | | ✓ | ✓ | ✓ | | |

## LANDROVER RANGE ROVER II (LP) 07/94→ 03/02

| NR | MAPCO | REF | | | ← | → | ↑ | ↓ | | | NEW | INFO |
|---|---|---|---|---|---|---|---|---|---|---|---|---|
| 1 | 59679 | ANR 3304 | ✓ | | ✓ | ✓ | | | ✓ | ✓ | | 1 |

# LEXUS

## LEXUS GS 300 08/97→

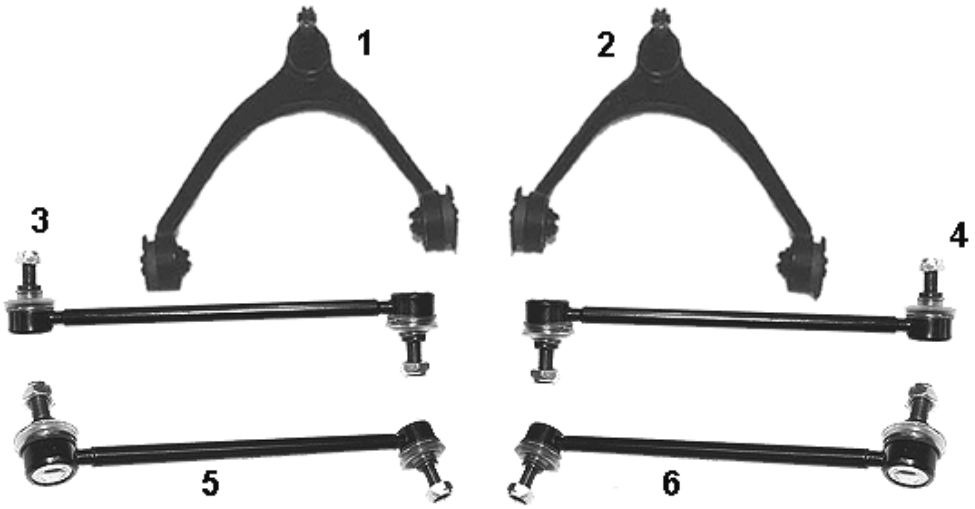


| NR | MAPCO | REF | | | ← | → | ↑ | ↓ | | | NEW | INFO |
|---|---|---|---|---|---|---|---|---|---|---|---|---|
| 1 | **49950** | 48630-39055 | ✓ | | ✓ | | ✓ | | ✓ | ✓ | | |
| 2 | **49951** | 48610-39085 | ✓ | | | ✓ | ✓ | | ✓ | ✓ | | |
| 3 | **49280HPS** | 48810-33010 | ✓ | | ✓ | | | | ✓ | ✓ | | |
| 4 | **49281HPS** | 48820-33020 | ✓ | | | ✓ | | | ✓ | ✓ | | |
| 5 | **49282HPS** | 48830-32040 | | ✓ | ✓ | | | | ✓ | ✓ | | |
| 6 | **49285** | 48830-33010 | | ✓ | | ✓ | | | ✓ | ✓ | | |
| | | | | | | | | | | | | |
| | | | | | | | | | | | | |

## LEXUS GS 300 08/97→

| NR | MAPCO | REF | | | ← | → | ↑ | ↓ | | | NEW | INFO |
|---|---|---|---|---|---|---|---|---|---|---|---|---|
| 1 | **51552** | 48069-33050 | ✓ | | ✓ | | | ✓ | ✓ | ✓ | ✓ | |
| 2 | **51553** | 48068-33070 | ✓ | | | ✓ | | ✓ | ✓ | ✓ | ✓ | |

# MAZDA

## MAZDA 121 DA – DB3 10/87→10/90

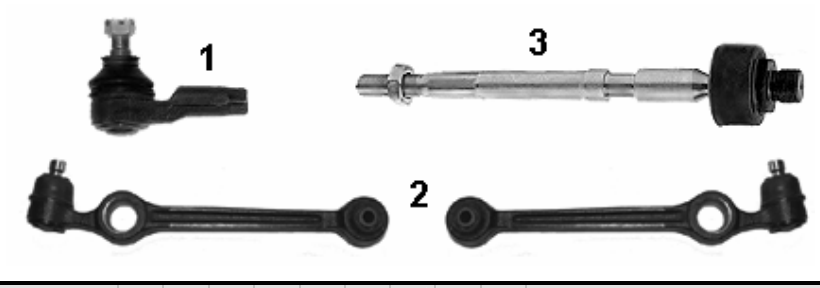


| NR | MAPCO | REF | | | ← | → | ↑ | ↓ | | | NEW | INFO |
|---|---|---|---|---|---|---|---|---|---|---|---|---|
| 1 | 19580 | 8AB1-32-280 | ✓ | | ✓ | ✓ | | | ✓ | ✓ | | |
| 2 | 51531 | KKY01-34-390A | ✓ | | ✓ | ✓ | | ✓ | ✓ | ✓ | | |
| 3 | 51533 | KK150-32-240 | ✓ | | ✓ | ✓ | | | ✓ | ✓ | | ☑ DA M12x1,5RHT |

## MAZDA 121 DB1 11/90→03/96

| NR | MAPCO | REF | | | ← | → | ↑ | ↓ | | | NEW | INFO |
|---|---|---|---|---|---|---|---|---|---|---|---|---|
| 1 | 19583 | 8AB2-32-280 | ✓ | | ✓ | ✓ | | | ✓ | ✓ | | |
| | | | | | | | | | | | | |

## MAZDA 121 III (ZQ) 03/96→

| NR | MAPCO | REF | | | ← | → | ↑ | ↓ | | | NEW | INFO |
|---|---|---|---|---|---|---|---|---|---|---|---|---|
| 1 | 59534 | EA01-28-170D | | ✓ | ✓ | ✓ | | | ✓ | ✓ | | |
| 2 | 19763 | 94FB3395A2B | ✓ | | ✓ | ✓ | | | ✓ | ✓ | | |
| 3 | 19642 | 1E00-34-350A | ✓ | | ✓ | | | | ✓ | ✓ | | |
| 4 | 19643 | 1E03-34-300A | ✓ | | | ✓ | | | ✓ | ✓ | | |
| 5 | 59533HPS | 1E01-34-170A | ✓ | | ✓ | ✓ | | | ✓ | ✓ | | |
| 6 | 95642 | | ✓ | | ✓ | ✓ | | | ✓ | ✓ | | MS |
| | | | | | | | | | | | | |

## MAZDA 2 — 04/03→

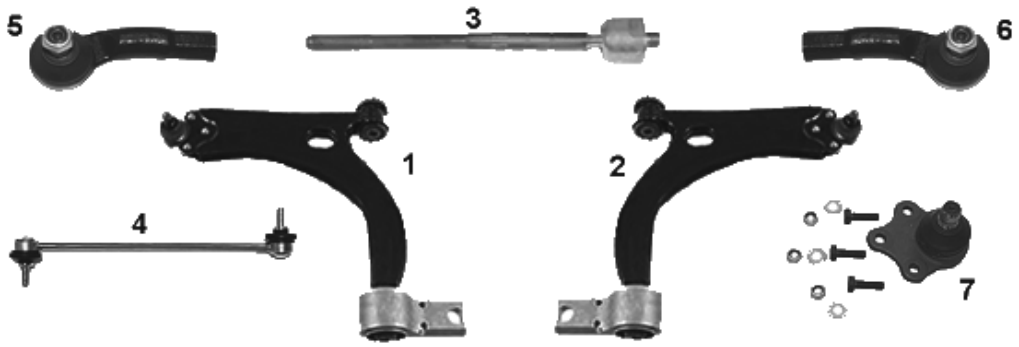


| NR | MAPCO | REF | | | ← | → | ↑ | ↓ | | | NEW | INFO |
|---|---|---|---|---|---|---|---|---|---|---|---|---|
| 1 | 59650 | DD32-34-350 | ✓ | | ✓ | | | | ✓ | ✓ | | |
| 2 | 59651 | DD32-34-300 | ✓ | | | ✓ | | | ✓ | ✓ | | |
| 3 | 59663 | DE90-32-240 | ✓ | | ✓ | ✓ | | | ✓ | ✓ | | M14X1,5 |
| 4 | 19774 | DD32-34-170 | ✓ | | ✓ | ✓ | | | ✓ | ✓ | | |
| 5 | 59669 | DE90-32-290 | ✓ | | ✓ | | | | ✓ | ✓ | | M12x1,5 |
| 6 | 59670 | DE90-32-280 | ✓ | | | ✓ | | | ✓ | ✓ | | M12x1,5 |
| 7 | 59671 | 2S613395AB | ✓ | | ✓ | ✓ | | | ✓ | ✓ | | Ø 16,5mm |

## MAZDA 323 (BD1) — 11/80→01/85

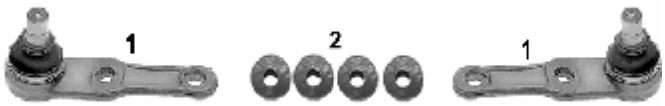


| NR | MAPCO | REF | | | ← | → | ↑ | ↓ | | | NEW | INFO |
|---|---|---|---|---|---|---|---|---|---|---|---|---|
| 1 | 19582 | B092-34-550 | ✓ | | ✓ | ✓ | | | ✓ | ✓ | | |
| 2 | 33532/4 | | ✓ | | ✓ | ✓ | | | ✓ | ✓ | | |

## MAZDA 323 (BF) – (BW) — 02/85→10/89

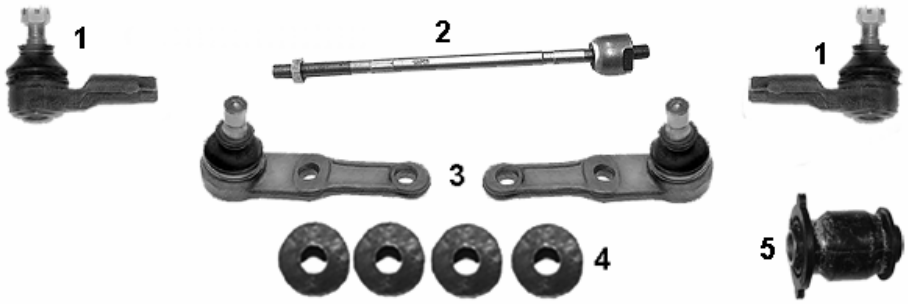


| NR | MAPCO | REF | | | ← | → | ↑ | ↓ | | | NEW | INFO |
|---|---|---|---|---|---|---|---|---|---|---|---|---|
| 1 | 19580 | 8AB1-32-280 | ✓ | | ✓ | ✓ | | | ✓ | ✓ | | M12x1,25RHT |
| 2 | 19581 | BF67-32-240 | ✓ | | ✓ | ✓ | | | | ✓ | | |
| 3 | 19582 | B092-34-550 | ✓ | | ✓ | ✓ | | | ✓ | ✓ | | |
| 4 | 33532/4 | | ✓ | | ✓ | ✓ | | | ✓ | ✓ | | |
| 5 | 33541 | B097-34-470A | ✓ | | ✓ | ✓ | | | ✓ | ✓ | ✓ | |

## MAZDA 323 (BG) 09/89→07/94

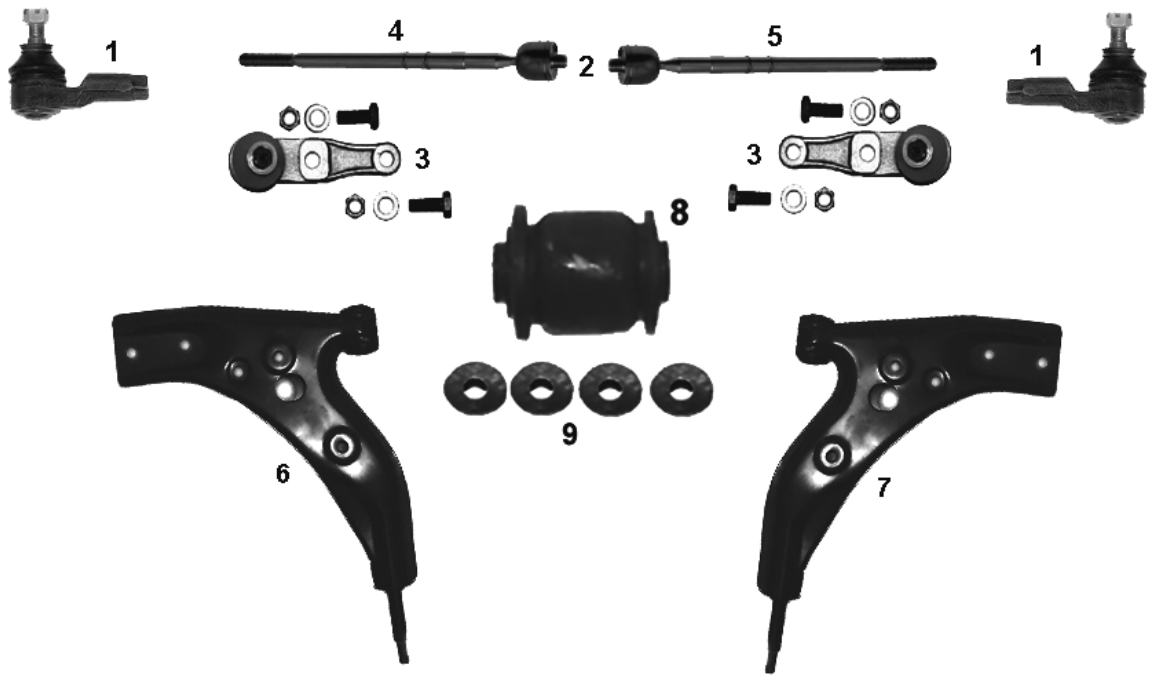


| NR | MAPCO | REF | | | ← | → | ↑ | ↓ | | | NEW | INFO |
|---|---|---|---|---|---|---|---|---|---|---|---|---|
| 1 | 19583 | 8AB2-32-280 | ✓ | | ✓ | ✓ | | | ✓ | ✓ | | M12,5x1,25 RHT |
| 2 | 19584 | B455-32-24X | ✓ | | ✓ | ✓ | | | | ✓ | | |
| 3 | 19585 | B455-34-550 | ✓ | | ✓ | ✓ | | | ✓ | ✓ | | |
| 4 | 19594 | B456-32-25X | ✓ | | ✓ | | | | ✓ | | | |
| 5 | 59231 | B456-32-24X | ✓ | | | ✓ | | | ✓ | | | |
| 6 | 49230 | BR70-34-350B | ✓ | | ✓ | | | ✓ | ✓ | ✓ | | |
| 7 | 49231 | BR70-34-300B | ✓ | | | ✓ | | ✓ | ✓ | ✓ | | |
| 8 | 33533 | B210-34-470 | ✓ | | ✓ | ✓ | | ✓ | ✓ | ✓ | | |
| 9 | 33532/4 | | ✓ | | ✓ | ✓ | | | ✓ | ✓ | | |

## MAZDA 323 (BA) 08/94→1998

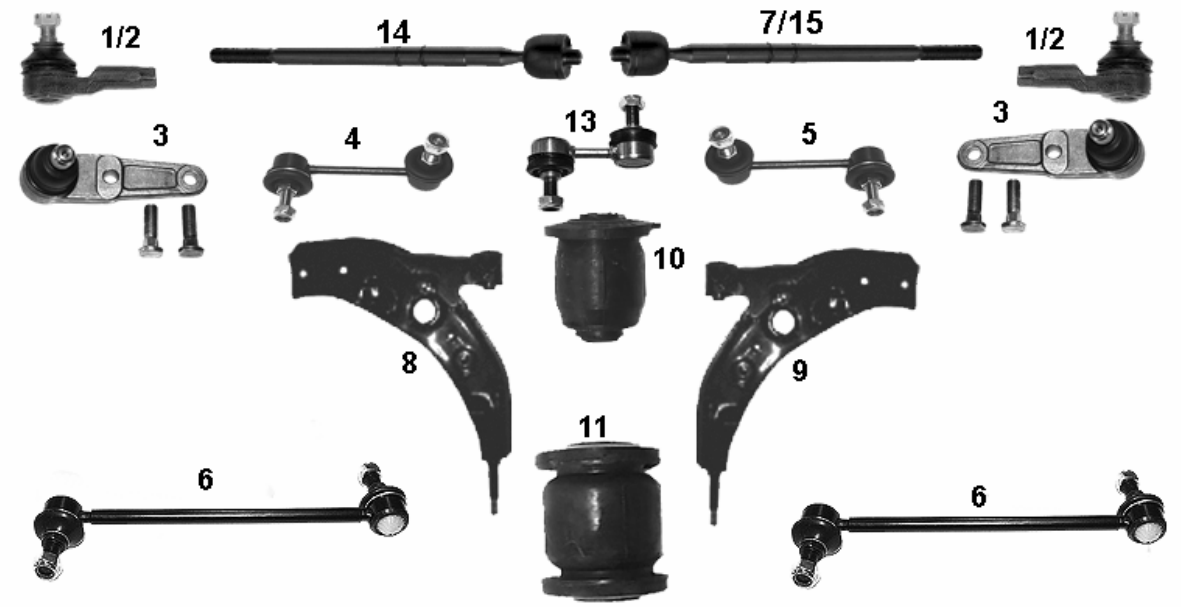


| NR | MAPCO | REF | | | ← | → | ↑ | ↓ | | | NEW | INFO |
|---|---|---|---|---|---|---|---|---|---|---|---|---|
| 1 | 49588 | B21H-32-280 | ✓ | | ✓ | ✓ | | | ✓ | ✓ | | ✓ 1,3 - 1,5 |
| 2 | 19583 | 8AB2-32-280 | ✓ | | ✓ | ✓ | | | ✓ | ✓ | | ✓ 1,7 - 2,0 V6, M12,5x1,25 RHT |
| 3 | 49589 | BTDA-34-550 | ✓ | | ✓ | ✓ | | | ✓ | ✓ | | |
| 4 | 19590 | GA2A-34-170A | ✓ | | ✓ | | | | ✓ | ✓ | | |
| 5 | 19591 | GA2A-34-150A | ✓ | | | ✓ | | | ✓ | ✓ | | |
| 6 | 19593HPS | BC1D-28-170A | | ✓ | | | | | ✓ | ✓ | | |
| 7 | 59711 | B21H-32-25X | ✓ | | ✓ | ✓ | | | ✓ | ✓ | | M12x1,25RHT |
| 8 | 49580 | B01A-34-350E | ✓ | | ✓ | | | | ✓ | ✓ | | ✓ 1.7D – 2.0 |
| 9 | 49581 | B01A-34-300E | ✓ | | | ✓ | | | ✓ | ✓ | | ✓ 1.7D – 2.0 |
| 10 | 33535 | BC1D-34-470 | ✓ | | ✓ | ✓ | | | ✓ | ✓ | | |
| 11 | 33540 | LB41-34-460 | ✓ | | ✓ | ✓ | | | ✓ | ✓ | | |
| 13 | 19516 | EA03-34-170A | ✓ | | ✓ | ✓ | | | ✓ | ✓ | | |
| 14 | 49586 | E016-32-25X | ✓ | | ✓ | ✓ | | | ✓ | ✓ | | ✓ 1.8 |
| 15 | 59232 | E016-32-250 | ✓ | | ✓ | ✓ | | | | ✓ | | |

## MAZDA 323 VI (BJ) 1998→

| NR | MAPCO | REF | | | ← | → | ↑ | ↓ | | | NEW | INFO |
|---|---|---|---|---|---|---|---|---|---|---|---|---|
| 1 | 33532/4 | | ✓ | | ✓ | ✓ | | | ✓ | ✓ | | |
| 2 | 33538 | B25D-34-460 | ✓ | | ✓ | ✓ | | | ✓ | ✓ | | |
| 3 | 49590HPS | B26R-34-170 | ✓ | | ✓ | ✓ | | | ✓ | ✓ | | L= 190,0 mm Chassis → JMZBJ304194 |
| 4 | 49591HPS | B26R-28-170 | | ✓ | ✓ | ✓ | | | ✓ | ✓ | | -> 10/2000 |
| 5 | 33539 | B25D-34-470 | ✓ | | ✓ | ✓ | | | ✓ | ✓ | | |
| 6 | 59388HPS | LC62-34-170B | ✓ | | ✓ | ✓ | | | ✓ | ✓ | ✓ | L= 265,0 mm |
| 7 | 49584 | B25D-34-350B | ✓ | | ✓ | | | ✓ | ✓ | ✓ | | |
| 8 | 49585 | B25D-34-300B | ✓ | | | ✓ | | ✓ | ✓ | ✓ | | |

## MAZDA 3 (BK__) 10/03→

| NR | MAPCO | REF | | | ← | → | ↑ | ↓ | | | NEW | INFO |
|---|---|---|---|---|---|---|---|---|---|---|---|---|
| 1 | 59664 | BP4K-34-170C | ✓ | | ✓ | ✓ | | | ✓ | ✓ | | 298,0 mm |
| 2 | 59668 | C236-28-500A | | ✓ | ✓ | ✓ | | | ✓ | ✓ | | |
| 3 | 59646 | BP4K-28-C10B | | ✓ | ✓ | ✓ | | | ✓ | ✓ | | |
| 4 | 51602 | B32H-34-350 | ✓ | | ✓ | | | ✓ | ✓ | ✓ | | |
| 5 | 51603 | B32H-34-300 | ✓ | | | ✓ | | ✓ | ✓ | ✓ | | |

## MAZDA 5 (CR19) 03/05→

| NR | MAPCO | REF | | | ← | → | ↑ | ↓ | | | NEW | INFO |
|---|---|---|---|---|---|---|---|---|---|---|---|---|
| 1 | 59664 | BP4K-34-170C | ✓ | | ✓ | ✓ | | | ✓ | ✓ | | 298,0 mm |
| 2 | 59668 | C236-28-500A | | ✓ | ✓ | ✓ | | | ✓ | ✓ | | |
| 3 | 59646 | BP4K-28-C10B | | ✓ | ✓ | ✓ | | | ✓ | ✓ | | |
| | | | | | | | | | | | | |
| | | | | | | | | | | | | |

## MAZDA 626 III GV 09/87→09/97
## MAZDA 626 III GD 07/87→05/92

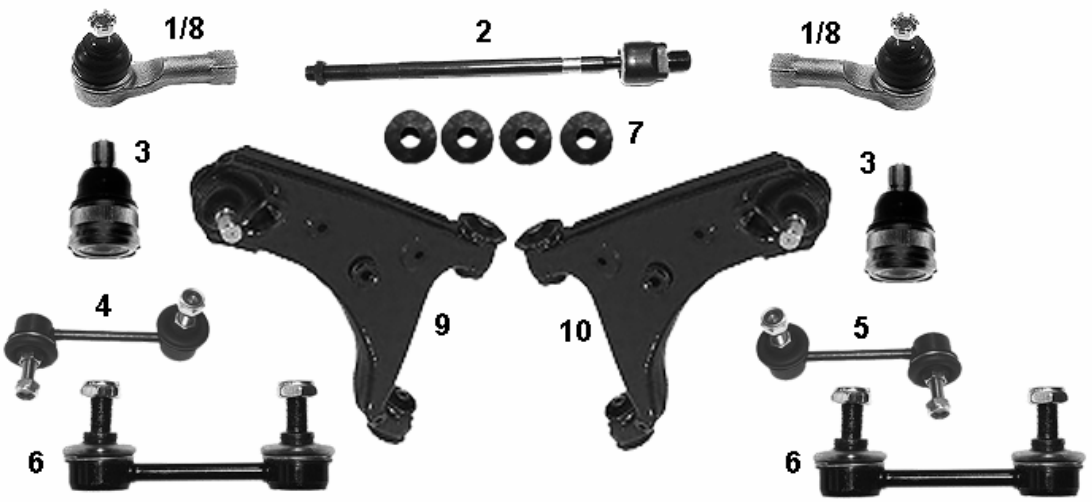


| NR | MAPCO | REF | | | ← | → | ↑ | ↓ | | | NEW | INFO |
|---|---|---|---|---|---|---|---|---|---|---|---|---|
| 1 | 19595 | 8AH1-32-280 | ✓ | | ✓ | ✓ | | | ✓ | ✓ | | Chassis → 562279, M14x1,5RHT |
| 2 | 19588 | GJ22-32-240 | ✓ | | ✓ | ✓ | | | ✓ | ✓ | | |
| 3 | 19587 | G030-99-356 | ✓ | | ✓ | ✓ | | | ✓ | ✓ | | |
| 4 | 19590 | GA2A-34-170A | ✓ | | ✓ | | | | ✓ | ✓ | | |
| 5 | 19591 | GA2A-34-150A | ✓ | | | ✓ | | | ✓ | ✓ | | |
| 6 | 19592HPS | GA2C-28-170B | | ✓ | ✓ | ✓ | | | ✓ | ✓ | | |
| 7 | 33532/4 | | ✓ | | ✓ | ✓ | | | ✓ | ✓ | | |
| 8 | 59350 | 8AG3-32-280 | ✓ | | ✓ | ✓ | | | ✓ | ✓ | | Chassis 205497→ |
| 9 | 51538 | GF22-34-350A | ✓ | | ✓ | | | | ✓ | ✓ | ✓ | |
| 10 | 51539 | GJ83-34-300A | ✓ | | | ✓ | | | ✓ | ✓ | ✓ | |

## MAZDA 626 IV GE 08/91→ 04/97

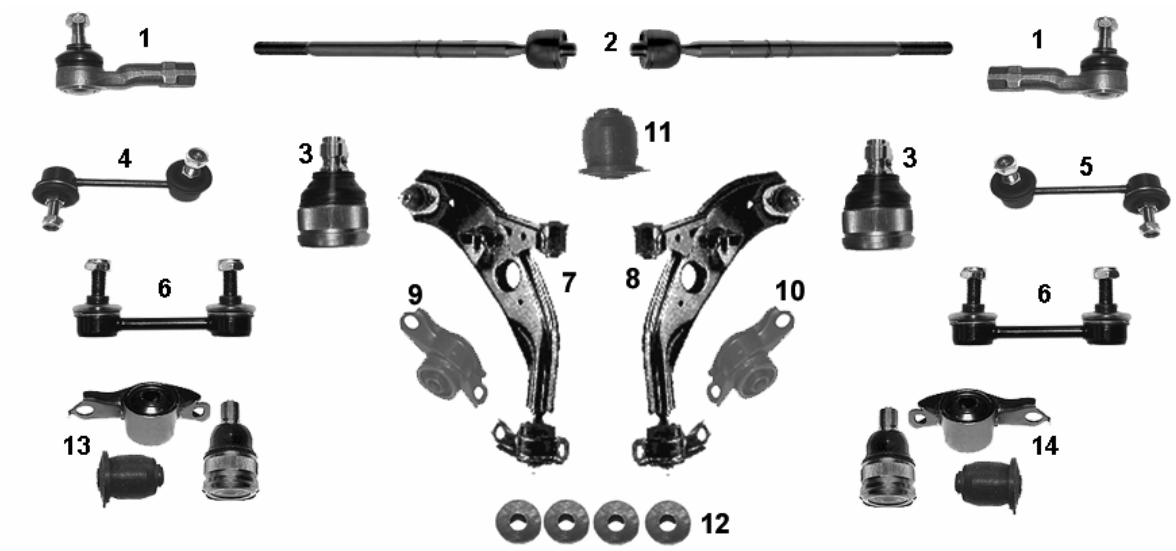


| NR | MAPCO | REF | | | ← | → | ↑ | ↓ | | | NEW | INFO |
|---|---|---|---|---|---|---|---|---|---|---|---|---|
| 1 | 19589 | 8AG4-32-280 | ✓ | | ✓ | ✓ | | | ✓ | ✓ | | Chassis 562280→, M14x1,5RHT |
| 2 | 19599 | GA2A-32-250 | ✓ | | ✓ | ✓ | | | ✓ | ✓ | | M14x1,5RHT |
| 3 | 19587 | G030-99-356 | ✓ | | ✓ | ✓ | | | ✓ | ✓ | | |
| 4 | 19590 | GA2A-34170 | ✓ | | ✓ | | | | ✓ | ✓ | | |
| 5 | 19591 | GA2A-34150 | ✓ | | | ✓ | | | ✓ | ✓ | | |
| 6 | 19592HPS | GA2B-28-170A | | ✓ | ✓ | ✓ | | | ✓ | ✓ | | |
| 7 | 49582 | GA6B-34-350A | ✓ | | ✓ | | | | ✓ | ✓ | | |
| 8 | 49583 | GA6B-34-300A | ✓ | | | ✓ | | | ✓ | ✓ | | |
| 9 | 33530 | GA2A-34-46YE | ✓ | | ✓ | | | | ✓ | ✓ | | |
| 10 | 33531 | GA2A-34-46XE | ✓ | | | ✓ | | | ✓ | ✓ | | |
| 11 | 33534 | GA2B-34-470A | ✓ | | ✓ | ✓ | | | ✓ | ✓ | | |
| 12 | 33532/4 | | ✓ | | ✓ | ✓ | | | ✓ | ✓ | | |
| 13 | 19287 | | ✓ | | ✓ | | | | ✓ | ✓ | | Kit |
| 14 | 19288 | | ✓ | | | ✓ | | | ✓ | ✓ | | Kit |

## MAZDA 626 V GF 05/97→ 10/02

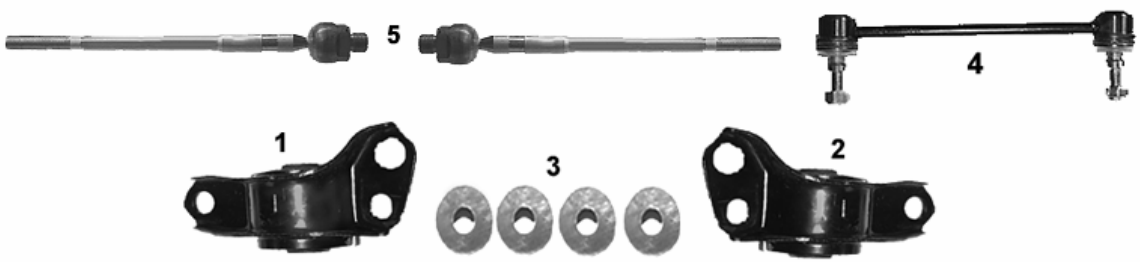


| NR | MAPCO | REF | | | ← | → | ↑ | ↓ | | | NEW | INFO |
|---|---|---|---|---|---|---|---|---|---|---|---|---|
| 1 | 33536 | GD7A-34-46X | ✓ | | ✓ | | | | ✓ | ✓ | | |
| 2 | 33537 | GD7A-34-46Y | ✓ | | | ✓ | | | ✓ | ✓ | | |
| 3 | 33532/4 | | ✓ | | ✓ | ✓ | | | ✓ | ✓ | | |
| 4 | 59535 | GE4T-28-170 | ✓ | | ✓ | | | | ✓ | ✓ | | |
| 5 | 59712 | GE4T-32-240 | | ✓ | ✓ | ✓ | | | ✓ | ✓ | | |

## MAZDA 6 (GG, GY) 06/02→

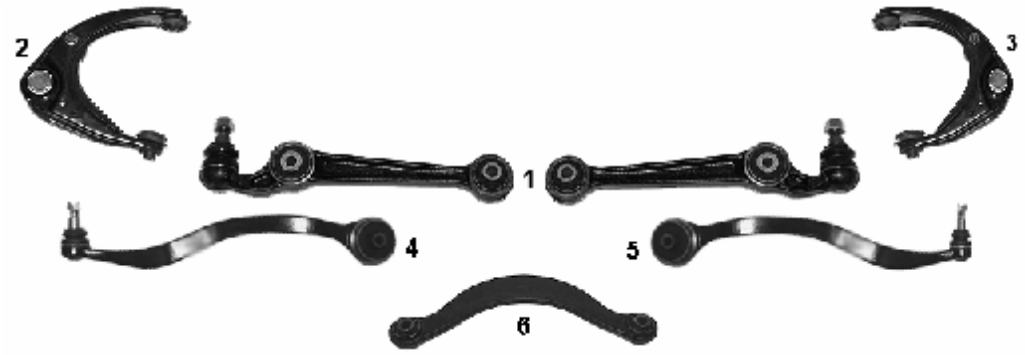


| NR | MAPCO | REF | | | ← | → | ↑ | ↓ | | | NEW | INFO |
|---|---|---|---|---|---|---|---|---|---|---|---|---|
| 1 | 49233 | GJ6A-34-300B | ✓ | | ✓ | ✓ | | ✓ | ✓ | ✓ | | |
| 2 | 49235 | GJ6A-37-250B | ✓ | | ✓ | | ✓ | | ✓ | ✓ | | |
| 3 | 49234 | GJ6A-34-200B | ✓ | | | ✓ | ✓ | | ✓ | ✓ | | |
| 4 | 59368 | GJ6A-34-J50C | ✓ | | ✓ | | | | ✓ | ✓ | | hinten / rear / arrière |
| 5 | 59369 | GJ6A-34-J00C | ✓ | | | ✓ | | | ✓ | ✓ | | hinten / rear / arrière |
| 6 | 59370 | GJ6A-28-C10A | | ✓ | ✓ | ✓ | | | ✓ | ✓ | | |

## MAZDA MP-V I 03/95→ 09/99

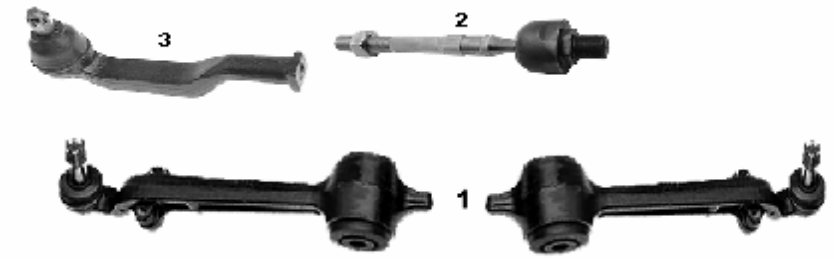


| NR | MAPCO | REF | | | ← | → | ↑ | ↓ | | | NEW | INFO |
|---|---|---|---|---|---|---|---|---|---|---|---|---|
| 1 | 49236 | LB82-34-300 | ✓ | | ✓ | ✓ | | ✓ | ✓ | ✓ | | |
| 2 | 59349 | LA01-32-115 | ✓ | | ✓ | ✓ | | | ✓ | ✓ | | M17x1RHT |
| 3 | 59338 | 8AL1-32-280 | ✓ | | ✓ | | | | ✓ | ✓ | | M14x1,50RHT |

## MAZDA MP-V II (LW) 10/99→ 07/02

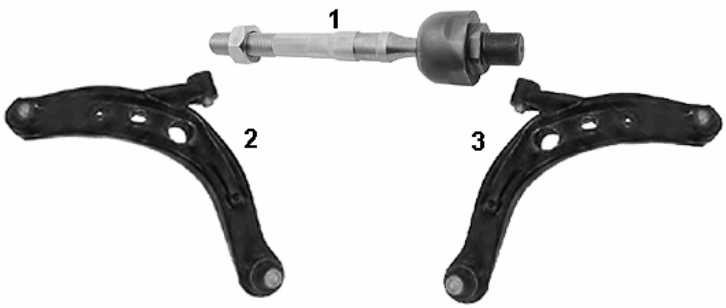


| NR | MAPCO | REF | | | ← | → | ↑ | ↓ | | | NEW | INFO |
|---|---|---|---|---|---|---|---|---|---|---|---|---|
| 1 | 59349 | LA01-32-115 | ✓ | | ✓ | ✓ | | | ✓ | ✓ | | M17x1RHT |
| 2 | 59394 | LC62-34-350C | ✓ | | ✓ | | | ✓ | ✓ | ✓ | ✓ | |
| 3 | 59395 | LC62-34-300C | ✓ | | | ✓ | | ✓ | ✓ | ✓ | ✓ | |
| | | | | | | | | | | | | |

## MAZDA MX-5 I (NA) 1.6-1.8 — 05/90→04/98

| NR | MAPCO | REF | | | ← | → | ↑ | ↓ | | | NEW | INFO |
|---|---|---|---|---|---|---|---|---|---|---|---|---|
| 1 | 59713 | NA01-32-240 | ✓ | | ✓ | ✓ | | | ✓ | ✓ | | 1 |

## MAZDA MX-5 II (NB) 1.6 16V, 1.8 16V — 05/98 →
## MAZDA MX-5 II 1.9 16V — 11/00 →

| NR | MAPCO | REF | | | ← | → | ↑ | ↓ | | | NEW | INFO |
|---|---|---|---|---|---|---|---|---|---|---|---|---|
| 1 | 49232 | NA01-34-170 | ✓ | | ✓ | ✓ | | | ✓ | ✓ | | 1 |

## MAZDA PREMACY (CP) 1.9 — 07/99→
## MAZDA PREMACY (CP) 2.0TD — 10/99→07/00

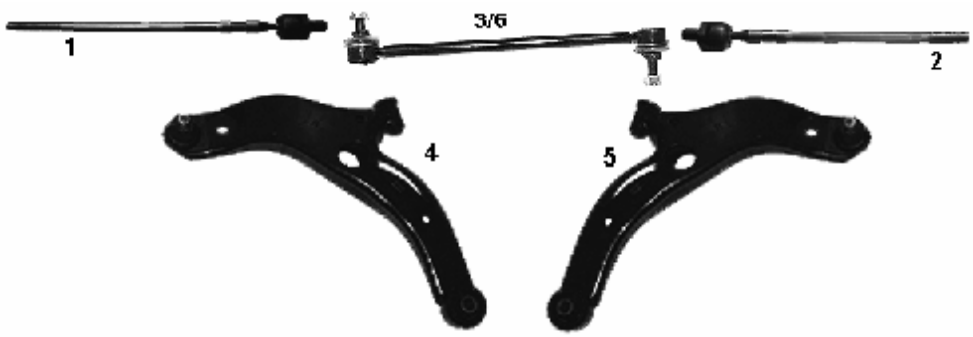


| NR | MAPCO | REF | | | ← | → | ↑ | ↓ | | | NEW | INFO |
|---|---|---|---|---|---|---|---|---|---|---|---|---|
| 1 | 59715 | B25D-32-240 | ✓ | | ✓ | | | | ✓ | ✓ | | |
| 2 | 59714 | B25D-32-250 | ✓ | | | ✓ | | | ✓ | ✓ | | |
| 3 | 59233HPS | B026R-34-170 | ✓ | | ✓ | ✓ | | | ✓ | ✓ | | Chassis → 151177 |
| 4 | 59389 | C100-34-350B | ✓ | | ✓ | | | | ✓ | ✓ | | |
| 5 | 59390 | C100-34-300B | ✓ | | | ✓ | | | ✓ | ✓ | | |
| 6 | 59388HPS | LC62-34-170B | ✓ | | ✓ | ✓ | | | ✓ | ✓ | ✓ | L= 190,0 mm |

## MAZDA XEDOS 9 (TA) — 07/93→

| NR | MAPCO | REF | | | ← | → | ↑ | ↓ | | | NEW | INFO |
|---|---|---|---|---|---|---|---|---|---|---|---|---|
| 1 | 59716 | T001-32-240A | ✓ | | ✓ | ✓ | | | ✓ | ✓ | | M13x1,5RHT 1 |

# MERCEDES-BENZ

**MERCEDES-BENZ A 140 - A160** 06/98→
**MERCEDES-BENZ A 160Cdi - A170Cdi** 10/97→

| NR | MAPCO | REF | | | ← | → | ↑ | ↓ | | | NEW | INFO |
|---|---|---|---|---|---|---|---|---|---|---|---|---|
| 1 | 49814/1 | 1683300827 | ✓ | | ✓ | | | | ✓ | ✓ | | |
| 2 | 49814/2 | 1683300927 | ✓ | | | ✓ | | | ✓ | ✓ | | |
| 3 | 49823 | 1683301135 | ✓ | | ✓ | | | | ✓ | ✓ | | |
| 4 | 49824 | 1683301235 | ✓ | | | ✓ | | | ✓ | ✓ | | |
| 5 | 49825 | 1683330127 | ✓ | | ✓ | ✓ | | | ✓ | ✓ | | |
| 6 | 49834 | 1683200789 | ✓ | | ✓ | ✓ | | | ✓ | ✓ | | |
| 7 | 49894 | 1683301335 | ✓ | | ✓ | ✓ | | | ✓ | ✓ | | ✓ 1.6, 1.7, 1.9 |
| 8 | 33943 | 1683330614 | ✓ | | ✓ | ✓ | | | ✓ | ✓ | | |
| 9 | 33944 | 1683330714 | ✓ | | ✓ | ✓ | | | ✓ | ✓ | | |
| 10 | 59846 | | | ✓ | ✓ | ✓ | | | ✓ | ✓ | | |
| 11 | 36972 | 1243527065 | | ✓ | ✓ | ✓ | | | ✓ | ✓ | ✓ | |

## MERCEDES-BENZ

C123 230–280 (C/CE)
T123 200–230–240–250–280–300 (T/TD/TE)
W123 200–220–230–240–250–280–300 D/E

01/76→10/84

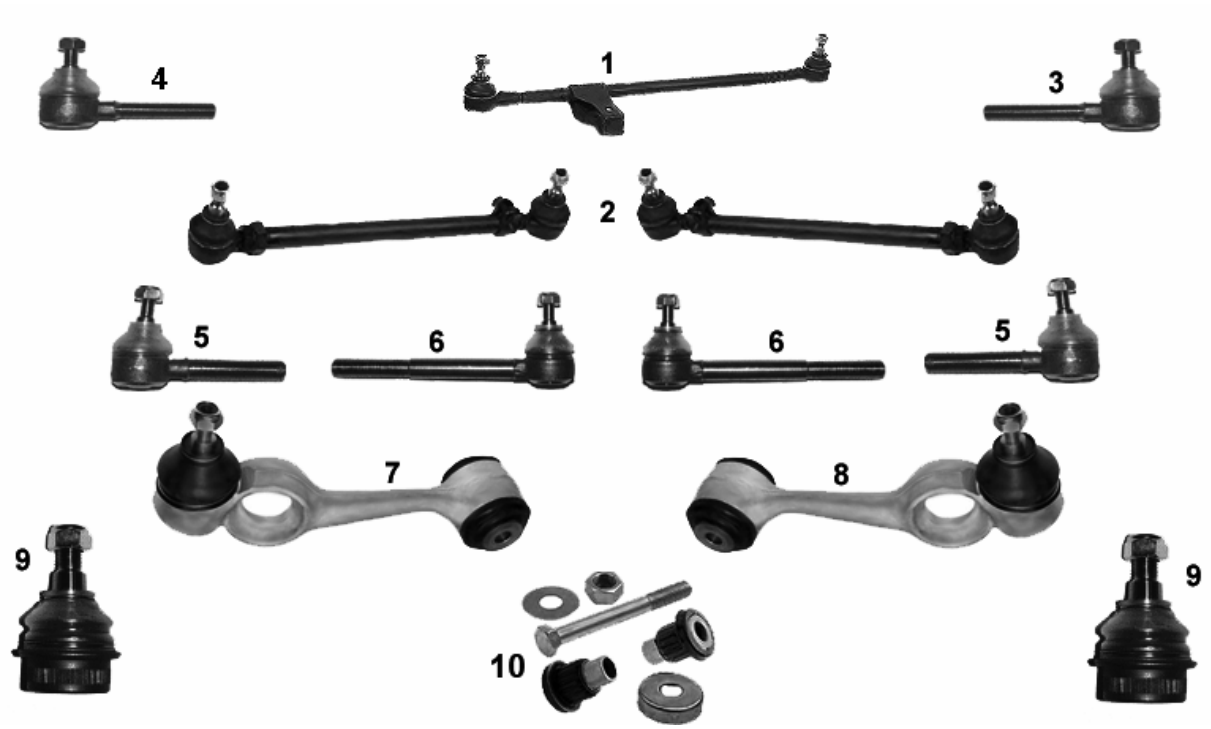


| NR | MAPCO | REF | | | ← | → | ↑ | ↓ | | | NEW | INFO |
|---|---|---|---|---|---|---|---|---|---|---|---|---|
| 1 | **19838** | 1234601505 | ✓ | | ✓ | ✓ | | | ✓ | ✓ | | innen/inner |
| 2 | **19829** | 1233301803 | ✓ | | ✓ | ✓ | | | ✓ | ✓ | | |
| 3 | **19836** | 0003385010 | ✓ | | ✓ | ✓ | | | ✓ | ✓ | | M14x1,5LHT |
| 4 | **19846** | 0003385110 | ✓ | | ✓ | ✓ | | | ✓ | ✓ | | M14x1,5RHT |
| 5 | **19841** | 1233380210 | ✓ | | ✓ | ✓ | | | ✓ | ✓ | | M16x1,5LHT |
| 6 | **19840** | 1233380110 | ✓ | | ✓ | ✓ | | | ✓ | ✓ | | M16x1,5RHT |
| 7 | **19842** | 1233305207 | ✓ | | ✓ | | | | ✓ | ✓ | | |
| 8 | **19843** | 1233305307 | ✓ | | | ✓ | | | ✓ | ✓ | | |
| 9 | **19844** | 1163330927 | ✓ | | ✓ | ✓ | | | ✓ | ✓ | | |
| 10 | **33972** | 1234600050 | ✓ | | ✓ | ✓ | | | ✓ | ✓ | | |

| | | |
|---|---|---|
| **MERCEDES-BENZ** | **C124 200 – 230 – 300 (CE)**<br>**T124 200 – 230 – 250 – 300 (TD-TE)**<br>**W124 200 – 230 – 250 – 260 – 300 (D/E)** | **1987→06/95**<br>**09/85→06/95**<br>**11/84→06/95** |

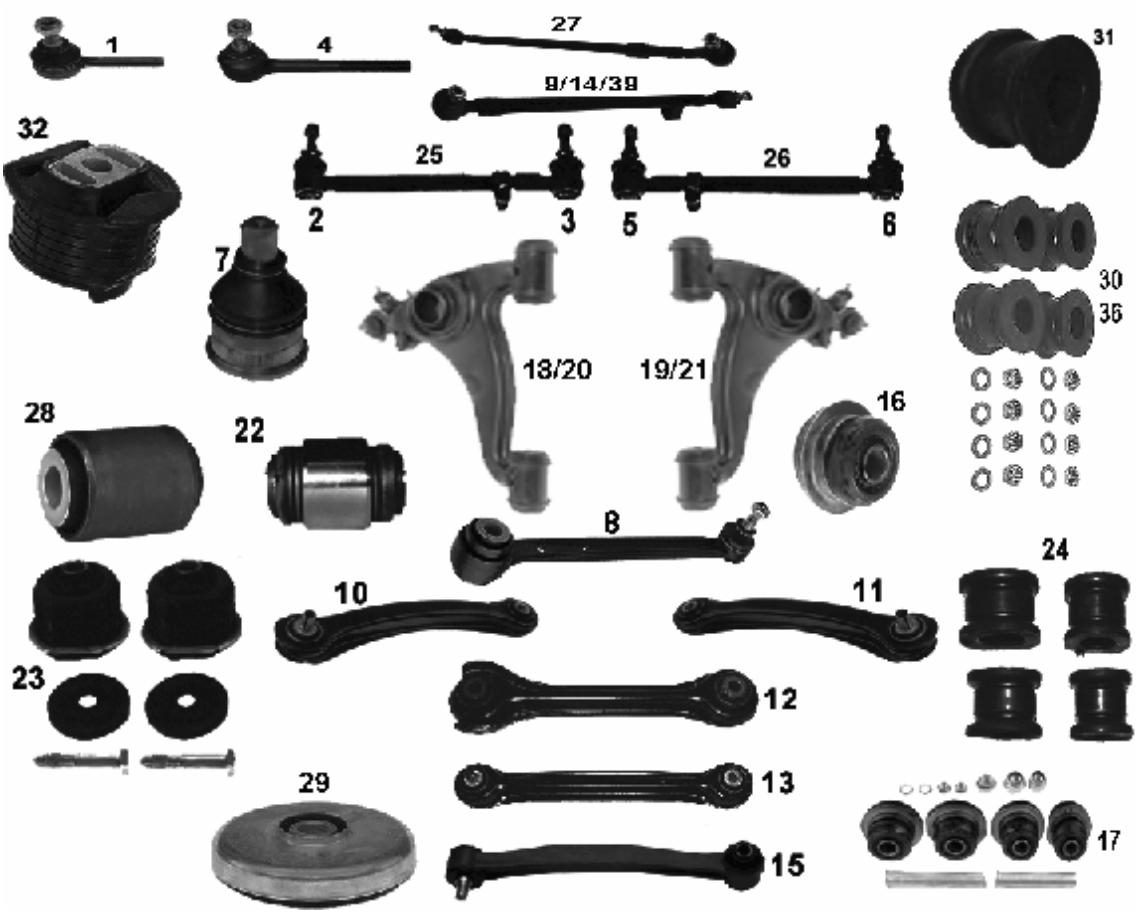


| NR | MAPCO | REF | | | ← | → | ↑ | ↓ | | | NEW | INFO |
|---|---|---|---|---|---|---|---|---|---|---|---|---|
| 1 | **59866** | 0013305235 | ✓ | | ✓ | ✓ | | | ✓ | ✓ | | M14x1,5RHT innen/inner |
| 2 | **19846** | 0003385110 | ✓ | | ✓ | ✓ | | | ✓ | ✓ | | M14x1,5RHT |
| 3 | **19847** | 0003385610 | ✓ | | ✓ | ✓ | | | ✓ | ✓ | | M14x1,5LHT |
| 4 | **59867** | 0013305335 | ✓ | | ✓ | ✓ | | | ✓ | ✓ | | M14x1,5LHT aussen/outside |
| 5 | **19848** | 0003385410 | ✓ | | ✓ | ✓ | | | ✓ | ✓ | | M14x1,5RHT |
| 6 | **19849** | 0003385910 | ✓ | | ✓ | ✓ | | | ✓ | ✓ | | M14x1,5LHT |
| 7 | **19828** | 1243330327 | ✓ | | ✓ | ✓ | | | ✓ | ✓ | | |
| 8 | **19832** | 2013503253 | | ✓ | ✓ | ✓ | | | ✓ | ✓ | | |
| 9 | **19845** | 1244600805 | | ✓ | | | | | ✓ | ✓ | | Chassis →1BO221104 / 2BO051198 |
| 10 | **19817** | 1243507606 | | ✓ | ✓ | | | | ✓ | ✓ | | |
| 11 | **19818** | 1243507706 | | ✓ | | ✓ | | | ✓ | ✓ | | |
| 12 | **19820** | 2013505606 | | ✓ | ✓ | ✓ | | | ✓ | ✓ | | |
| 13 | **19819** | 1243500129 | | ✓ | ✓ | ✓ | | | ✓ | ✓ | | |
| 14 | **49813** | 1244601205 | ✓ | | ✓ | ✓ | | | ✓ | ✓ | | |
| 15 | **19839** | 1243200289 | ✓ | | ✓ | ✓ | | | ✓ | ✓ | | |
| 16 | **33841** | 2013335114 | ✓ | | ✓ | ✓ | | | ✓ | ✓ | | |
| 17 | **33841/4** | 1243300575 | ✓ | | ✓ | ✓ | | | ✓ | ✓ | | |
| 18 | **49817** | 1243303007 | ✓ | | ✓ | | | ✓ | ✓ | ✓ | | Chassis →124028 |
| 19 | **49818** | 1243303107 | ✓ | | | ✓ | | ✓ | ✓ | ✓ | | Chassis →124028 |
| 20 | **49828** | 1243303407 | ✓ | | ✓ | | | ✓ | ✓ | ✓ | | Chassis 124029→ |
| 21 | **49829** | 1243303507 | ✓ | | | ✓ | | ✓ | ✓ | ✓ | | Chassis 124029→ |
| 22 | **33870** | 2013520027 | ✓ | | ✓ | ✓ | | | ✓ | ✓ | | |

| MERCEDES-BENZ | C124 200 – 230 – 300 (CE)<br>T124 200 – 230 – 250 – 300 (TD-TE)<br>W124 200 – 230 – 250 – 260 – 300 (D/E) | Fortsetzung / continued | 1987→06/95<br>09/85→06/95<br>11/84→06/95 |
|---|---|---|---|

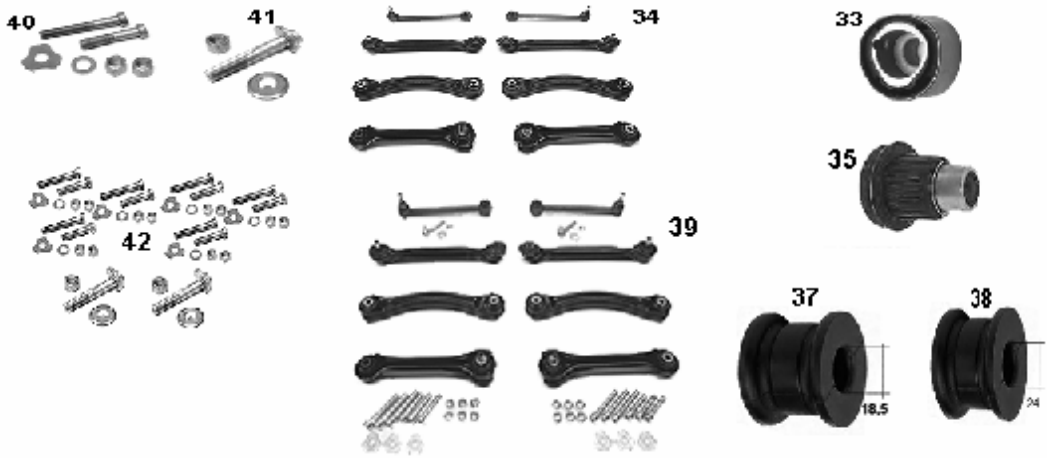


| NR | MAPCO | REF | | | ← | → | ↑ | ↓ | | | NEW | INFO |
|---|---|---|---|---|---|---|---|---|---|---|---|---|
| 23 | 33910 | 1243506408 | | ✓ | ✓ | ✓ | | | ✓ | ✓ | | |
| 24 | 33889/4 | 1243200447 | ✓ | | ✓ | ✓ | | | ✓ | ✓ | | |
| 25 | 19830/1 | 1243300803 | ✓ | | ✓ | ✓ | | | ✓ | ✓ | | |
| 26 | 19831/1 | 1243300903 | ✓ | | ✓ | ✓ | | | ✓ | ✓ | | |
| 27 | 59800 | 1244601405 | ✓ | | ✓ | ✓ | | | ✓ | ✓ | | |
| 28 | 33973 | 2013528765 | | ✓ | ✓ | ✓ | | | ✓ | ✓ | | ( für 19832 ) |
| 29 | 36899 | 1243511342 | | ✓ | ✓ | ✓ | | | ✓ | ✓ | | |
| 30 | 33868 | 2013200047 | ✓ | | ✓ | ✓ | | | ✓ | ✓ | | STOP |
| 31 | 33845 | 1243233785 | ✓ | | ✓ | ✓ | | | ✓ | ✓ | | STOP 24mm |
| 32 | 33942 | 1243510242 | | ✓ | ✓ | ✓ | | | ✓ | ✓ | | |
| 33 | 33865 | 1243527765 | | ✓ | ✓ | ✓ | | | ✓ | ✓ | | |
| 34 | 59830 | | | ✓ | ✓ | ✓ | | | ✓ | ✓ | | |
| 35 | 59831 | 1244630066 | ✓ | | ✓ | ✓ | | | ✓ | ✓ | | |
| 36 | 36913 | 1243201947 | ✓ | | ✓ | ✓ | | | ✓ | ✓ | | |
| 37 | 33889/2 | 1243232385 | ✓ | | ✓ | ✓ | | | ✓ | ✓ | | Ø innen/inner 18,5 mm |
| 38 | 33889/3 | 1243231785 | ✓ | | ✓ | ✓ | | | ✓ | ✓ | | Ø innen/inner 24,0 mm |
| 39 | 59830/1 | | | ✓ | ✓ | ✓ | | | ✓ | ✓ | ✓ | |
| 40 | 95830 | | | ✓ | ✓ | ✓ | | | ✓ | ✓ | ✓ | MS |
| 41 | 95831 | | | ✓ | ✓ | ✓ | | | ✓ | ✓ | ✓ | MS |
| 42 | 95832 | | | ✓ | ✓ | ✓ | | | ✓ | ✓ | ✓ | MS |

**VERGLEICHSNUMMERN DIENEN NUR ZUR BESSEREN IDENTIFIKATION UND DÜRFEN NICHT AUF RECHNUNGEN ERSCHEINEN!!!**
**Reference numbers are used for better identification only !**
**Références d'origine pour meilleure identification seulement !**

## MERCEDES-BENZ W 201 190 (D/E) 11/82→06/93

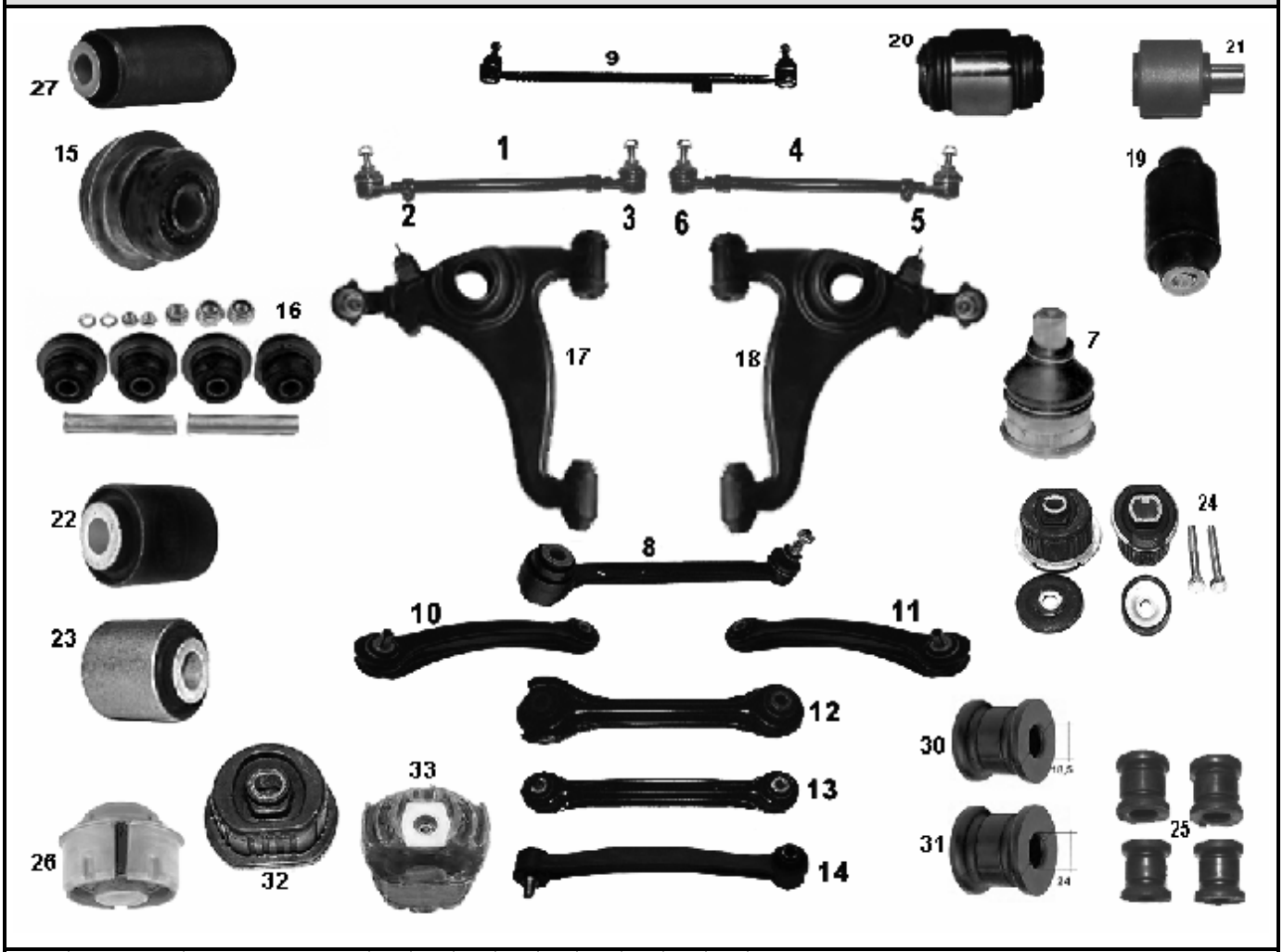


| NR | MAPCO | REF | | | ← | → | ↑ | ↓ | | | NEW | INFO |
|---|---|---|---|---|---|---|---|---|---|---|---|---|
| 1 | 19822 | 2013300703 | ✓ | | ✓ | ✓ | | | ✓ | ✓ | | |
| 2 | 19824 | 0003386010 | ✓ | | ✓ | ✓ | | | ✓ | ✓ | | M12x1,5LHT |
| 3 | 19823 | 0003386110 | ✓ | | ✓ | ✓ | | | ✓ | ✓ | | M12x1,5RHT |
| 4 | 19825 | 2013301603 | ✓ | | ✓ | ✓ | | | ✓ | ✓ | | |
| 5 | 19827 | 0003386210 | ✓ | | ✓ | ✓ | | | ✓ | ✓ | | M12x1,5LHT |
| 6 | 19826 | 0003386310 | ✓ | | ✓ | ✓ | | | ✓ | ✓ | | M12x1,5RHT |
| 7 | 19828 | 1243330327 | ✓ | | ✓ | ✓ | | | ✓ | ✓ | | |
| 8 | 19832 | 2013503253 | | ✓ | ✓ | ✓ | | | ✓ | ✓ | | |
| 9 | 19821 | 2014601505 | ✓ | | ✓ | ✓ | | | ✓ | ✓ | | |
| 10 | 19817 | 1243507606 | | ✓ | ✓ | | | | ✓ | ✓ | | |
| 11 | 19818 | 2103502506 | | ✓ | | ✓ | | | ✓ | ✓ | | |
| 12 | 19820 | 2013505606 | | ✓ | ✓ | ✓ | | | ✓ | ✓ | | |
| 13 | 19819 | 1243500129 | | ✓ | ✓ | ✓ | | | ✓ | ✓ | | |
| 14 | 19839 | 1243200289 | | ✓ | ✓ | ✓ | | | ✓ | ✓ | | |
| 15 | 33841 | 2013335114 | ✓ | | ✓ | ✓ | | | ✓ | ✓ | | |
| 16 | 33841/4 | 1243300575 | ✓ | | ✓ | ✓ | | | ✓ | ✓ | | |
| 17 | 49815 | 1243303807 | ✓ | | ✓ | | | | ✓ | ✓ | | |
| 18 | 49816 | 1243303907 | ✓ | | | ✓ | | | ✓ | ✓ | | |
| 19 | 33874 | 2013523665 | ✓ | | ✓ | ✓ | | | ✓ | ✓ | | |
| 20 | 33870 | 2013520027 | ✓ | | ✓ | ✓ | | | ✓ | ✓ | | |
| 21 | 33838 | 1243529065 | ✓ | | ✓ | ✓ | | | ✓ | ✓ | | Ø 10 mm |
| 22 | 33836 | 1243500575 | | ✓ | ✓ | ✓ | | | ✓ | ✓ | | |

## MERCEDES-BENZ W 201 190 (D/E) Fortsetzung / continued 11/82 →06/93

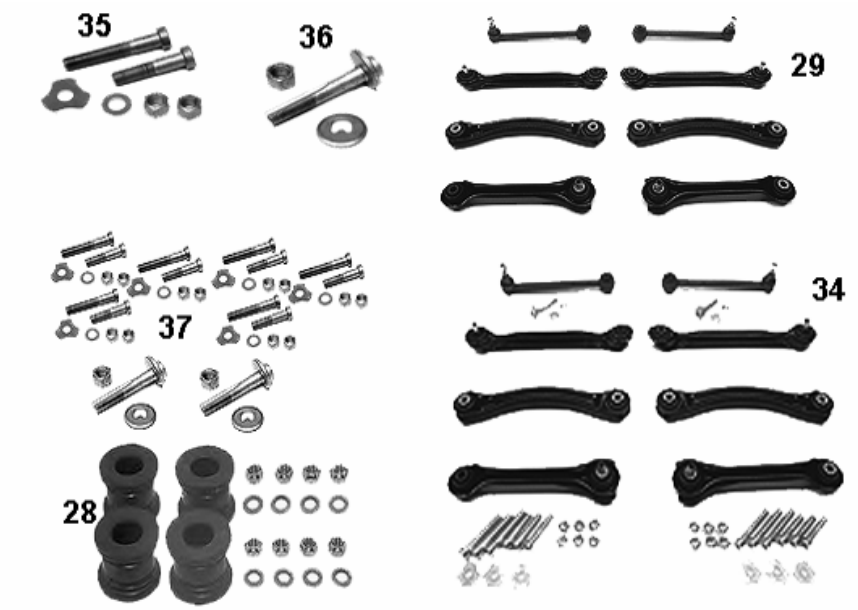


| NR | MAPCO | REF | | | ← | → | ↑ | ↓ | | | NEW | INFO |
|---|---|---|---|---|---|---|---|---|---|---|---|---|
| 23 | 33837 | 1243528665 | | ✓ | ✓ | ✓ | | | ✓ | ✓ | | |
| 24 | 33910 | 1243506408 | | ✓ | ✓ | ✓ | | | ✓ | ✓ | | |
| 25 | 33889/4 | 1243200447 | ✓ | | ✓ | ✓ | | | ✓ | ✓ | | |
| 26 | 33936 | 2013334514 | ✓ | | ✓ | ✓ | | | ✓ | ✓ | | Ø 14,3 mm |
| 27 | 33973 | 2013528765 | ✓ | | ✓ | ✓ | | | ✓ | ✓ | | |
| 28 | 33868 | 2013200047 | ✓ | | ✓ | ✓ | | | ✓ | ✓ | | ✓2.0, D2.0,D2.5, E2.0, E2.3 |
| 29 | 59830 | | | ✓ | ✓ | ✓ | | | ✓ | ✓ | | |
| 30 | 33889/2 | 1243232385 | ✓ | | ✓ | ✓ | | | ✓ | ✓ | | Ø innen/inner 18,5 mm |
| 31 | 33889/3 | 1243231785 | ✓ | | ✓ | ✓ | | | ✓ | ✓ | | Ø innen/inner 24,0 mm |
| 32 | 36924 | 2013512742 | | ✓ | ✓ | ✓ | | | ✓ | ✓ | | |
| 33 | 33978 | 2023510842 | | ✓ | ✓ | ✓ | | | ✓ | ✓ | | |
| 34 | 59830/1 | | | ✓ | ✓ | ✓ | | | ✓ | ✓ | ✓ | |
| 35 | 95830 | | | ✓ | ✓ | ✓ | | | ✓ | ✓ | ✓ | MS |
| 36 | 95831 | | | ✓ | ✓ | ✓ | | | ✓ | ✓ | ✓ | MS |
| 37 | 95832 | | | ✓ | ✓ | ✓ | | | ✓ | ✓ | ✓ | MS |

## MERCEDES-BENZ C140 500 - 600 (SEC) 10/92→ 02/99
## MERCEDES-BENZ W140 300 - 400 - 500 - 600 (SE-SEL) 02/91→ 10/98

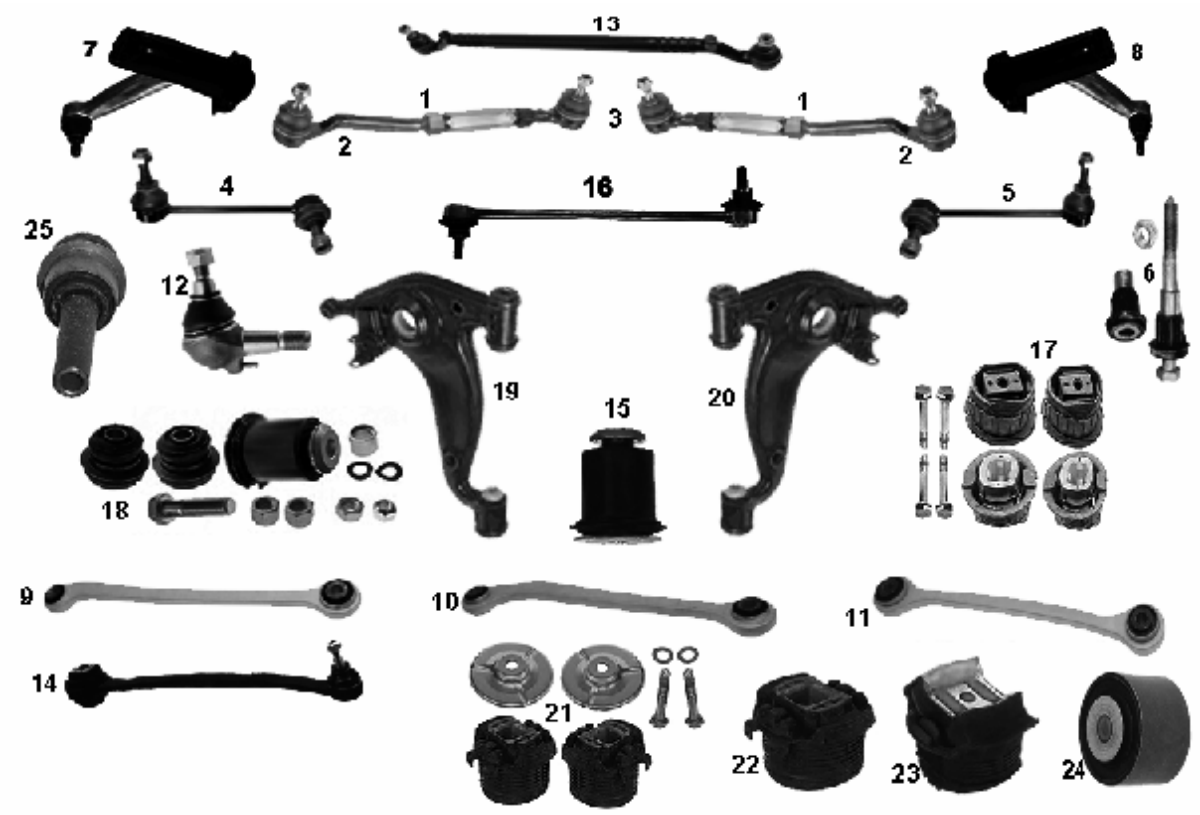


| NR | MAPCO | REF | | | ← | → | ↑ | ↓ | | | NEW | INFO |
|---|---|---|---|---|---|---|---|---|---|---|---|---|
| 1 | 19837 | 1403300003 | ✓ | | ✓ | ✓ | | | ✓ | ✓ | | |
| 2 | 19833 | 0013306235 | ✓ | | ✓ | ✓ | | | ✓ | ✓ | | |
| 3 | 19834 | 0013306335 | ✓ | | ✓ | ✓ | | | ✓ | ✓ | | |
| 4 | 49826 | 1403301189 | ✓ | | ✓ | | | | ✓ | ✓ | | |
| 5 | 49827 | 1403301289 | ✓ | | | ✓ | | | ✓ | ✓ | | |
| 6 | 33922 | 1404600819 | ✓ | | ✓ | ✓ | | | ✓ | ✓ | | |
| 7 | 49819 | 1403305407 | ✓ | | ✓ | | ✓ | | ✓ | ✓ | | |
| 8 | 49820 | 1403307707 | ✓ | | | ✓ | ✓ | | ✓ | ✓ | | |
| 9 | 49888 | 1403503406 | | ✓ | ✓ | ✓ | | | ✓ | ✓ | | Aluminium |
| 10 | 49889 | 1403503506 | | ✓ | ✓ | ✓ | | | ✓ | ✓ | | Aluminium |
| 11 | 49890 | 1403503606 | | ✓ | ✓ | ✓ | | | ✓ | ✓ | | Aluminium |
| 12 | 49891 | 1403330327 | ✓ | | ✓ | ✓ | | ✓ | ✓ | ✓ | | |
| 13 | 49892 | 1404600805 | ✓ | | ✓ | ✓ | | | ✓ | ✓ | | |
| 14 | 49893 | 1403503053 | | ✓ | ✓ | ✓ | | | ✓ | ✓ | | |
| 15 | 33971 | 1403331814 | ✓ | | ✓ | ✓ | | ✓ | ✓ | ✓ | | |
| 16 | 59856 | 1403201789 | ✓ | | ✓ | ✓ | | | ✓ | ✓ | | |
| 17 | 36919 | 1403303942 | ✓ | | ✓ | ✓ | | | ✓ | ✓ | | |
| 18 | 33867 | 1403306007 | ✓ | | ✓ | ✓ | | | ✓ | ✓ | | |
| 19 | 59836 | 1403306407 | ✓ | | ✓ | | | | ✓ | ✓ | | |
| 20 | 59837 | 1403306507 | ✓ | | | ✓ | | | ✓ | ✓ | | |
| 21 | 36920 | 1403508708 | | ✓ | ✓ | ✓ | | | ✓ | ✓ | | |
| 22 | 36921 | 1403517142 | | ✓ | ✓ | ✓ | | | ✓ | ✓ | | |
| 23 | 36922 | 1403518142 | | ✓ | ✓ | ✓ | | | ✓ | ✓ | | |
| 24 | 36923 | 1403528665 | | ✓ | ✓ | ✓ | | | ✓ | ✓ | | |
| 25 | 36980 | 1403331714 | ✓ | ✓ | ✓ | | ✓ | | ✓ | ✓ | | |

## MERCEDES-BENZ W202 C180- C200 - C220 - C280 06/93→05/00
## MERCEDES-BENZ W202 C200D - C220D - C250D 06/93→05/00

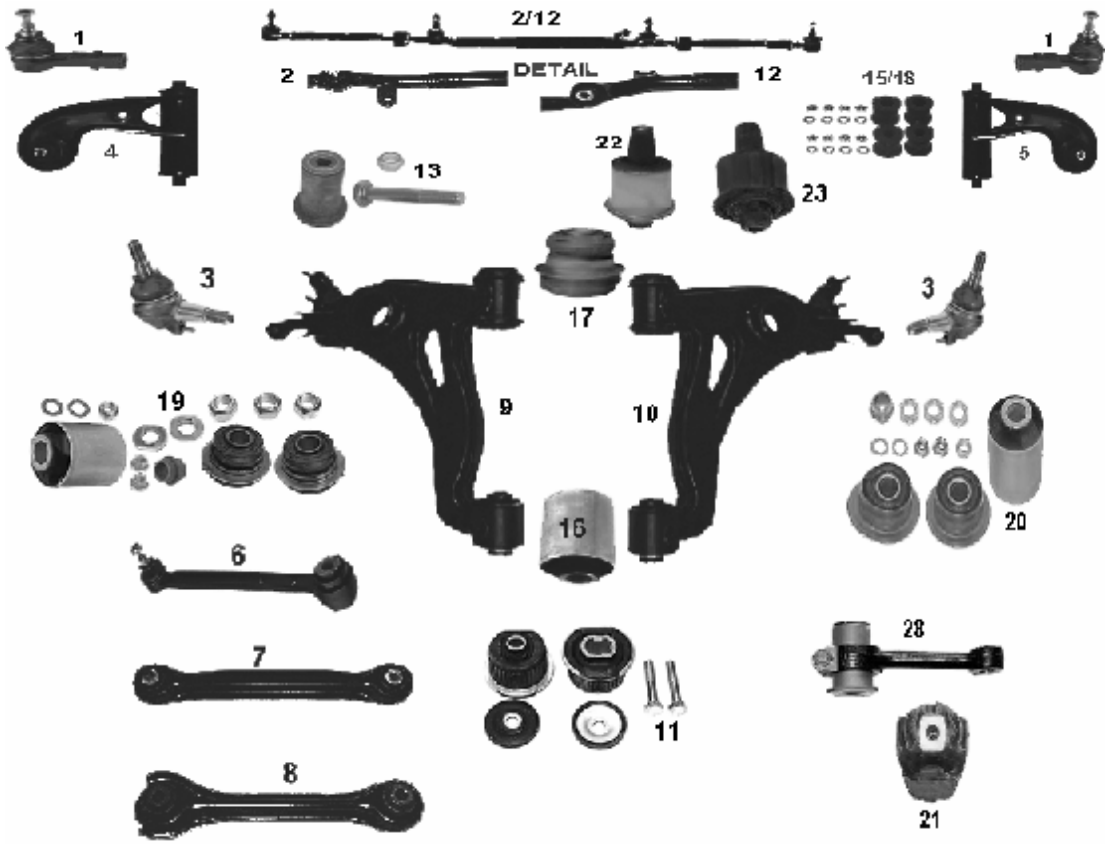


| NR | MAPCO | REF | | | ← | → | ↑ | ↓ | | | NEW | INFO |
|---|---|---|---|---|---|---|---|---|---|---|---|---|
| 1 | 49800 | 0013307435 | ✓ | | ✓ | ✓ | | | ✓ | ✓ | | M12x1,5RHT |
| 2 | 49801 | 2024600405 | ✓ | | ✓ | ✓ | | | ✓ | ✓ | | Rohr **D:28mm** |
| 3 | 49802 | 2023330027 | ✓ | | ✓ | ✓ | | | ✓ | ✓ | | |
| 4 | 49803 | 2103308707 | ✓ | | ✓ | | ✓ | | ✓ | ✓ | | |
| 5 | 49804 | 2103308807 | ✓ | | | ✓ | ✓ | | ✓ | ✓ | | |
| 6 | 19832 | 2013503253 | | ✓ | ✓ | ✓ | | | ✓ | ✓ | | |
| 7 | 19819 | 1243500129 | | ✓ | ✓ | ✓ | | | ✓ | ✓ | | |
| 8 | 19820 | 2013505606 | | ✓ | ✓ | ✓ | | | ✓ | ✓ | | |
| 9 | 49821 | 2023302607 | ✓ | | ✓ | | | ✓ | ✓ | ✓ | | |
| 10 | 49822 | 2023302707 | ✓ | | | ✓ | | ✓ | ✓ | ✓ | | |
| 11 | 33910 | 1243506408 | | ✓ | ✓ | ✓ | | | ✓ | ✓ | | |
| 12 | 59862 | 2024600505 | ✓ | | ✓ | ✓ | | | ✓ | ✓ | | Rohr **D:28mm** |
| 13 | 33974 | 2024600319 | ✓ | | ✓ | ✓ | | | ✓ | ✓ | | |
| 14 | 59830 | | | ✓ | ✓ | ✓ | | | ✓ | ✓ | | |
| 15 | 36908 | 1243200147 | ✓ | | ✓ | ✓ | | | ✓ | ✓ | | |
| 16 | 36911 | 2023336414 | ✓ | | ✓ | ✓ | | ✓ | ✓ | ✓ | | |
| 17 | 36912 | 2023336714 | ✓ | | ✓ | ✓ | | ✓ | ✓ | ✓ | | |
| 18 | 36913 | 1243201947 | ✓ | | ✓ | ✓ | | | ✓ | ✓ | | |
| 19 | 36916 | 2023300075 | ✓ | | ✓ | ✓ | | | ✓ | ✓ | | Chassis ->A443812, ->F 500865 |
| 20 | 36917 | 1703300075 | ✓ | | ✓ | ✓ | | | ✓ | ✓ | | Chassis A443813->, F 500866-> |
| 21 | 33978 | 2023510842 | | ✓ | ✓ | ✓ | | | ✓ | ✓ | | |
| 22 | 33976 | 2023336214 | ✓ | | ✓ | ✓ | ✓ | | ✓ | ✓ | | |
| 23 | 33977 | 2023337714 | ✓ | | ✓ | ✓ | ✓ | | ✓ | ✓ | | |

## MERCEDES-BENZ W202 C180- C200 - C220 - C280 06/93→05/00
## MERCEDES-BENZ W202 C200D - C220D - C250D 06/93→05/00

Fortsetzung / continued

| | | | | | | | | | | | | |
|---|---|---|---|---|---|---|---|---|---|---|---|---|
| 24 | 59830/1 | | | ✓ | ✓ | ✓ | | | ✓ | ✓ | ✓ | |
| 25 | 95830 | | | ✓ | ✓ | ✓ | | | ✓ | ✓ | ✓ | MS |
| 26 | 95831 | | | ✓ | ✓ | ✓ | | | ✓ | ✓ | ✓ | MS |
| 27 | 95832 | | | ✓ | ✓ | ✓ | | | ✓ | ✓ | ✓ | MS |
| 28 | 59869 | 2024600219 | ✓ | | ✓ | ✓ | | | ✓ | ✓ | ✓ | |

## MERCEDES-BENZ C-Klasse W203 05/00→
## MERCEDES-BENZ C-Klasse C203, T203 03/01→
## MERCEDES-BENZ CLK C209 06/02→

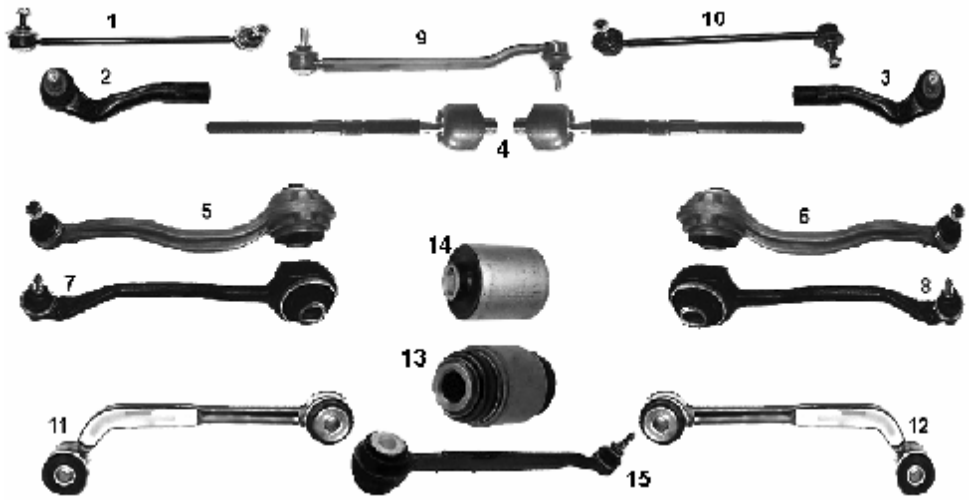


| NR | MAPCO | REF | | | ← | → | ↑ | ↓ | | | NEW | INFO |
|---|---|---|---|---|---|---|---|---|---|---|---|---|
| 1 | 49895HPS | 2033202489 | ✓ | | ✓ | ✓ | | | ✓ | ✓ | | |
| 2 | 59840 | 2033302303 | ✓ | | ✓ | | | | ✓ | ✓ | | 18mm M14X1,5RHT |
| 3 | 59841 | 2033302403 | ✓ | | | ✓ | | | ✓ | ✓ | | 18mm M14X1,5RHT |
| 4 | 59844 | 2203380715 | ✓ | | ✓ | ✓ | | | ✓ | ✓ | | |
| 5 | 59885 | 2033301711 | ✓ | | ✓ | | ✓ | | ✓ | ✓ | | Aluminium |
| 6 | 59884 | 2033301611 | ✓ | | | ✓ | ✓ | | ✓ | ✓ | | Aluminium |
| 7 | 59881 | 2033301911 | ✓ | | ✓ | | | ✓ | ✓ | ✓ | | |
| 8 | 59882 | 2033302011 | ✓ | | | ✓ | | ✓ | ✓ | ✓ | | |
| 9 | 59861 | 2033201889 | ✓ | | ✓ | ✓ | | | ✓ | ✓ | | ✓ 4 matic |
| 10 | 59857HPS | 2033202189 | ✓ | | ✓ | ✓ | | | ✓ | ✓ | | ✓ |
| 11 | 59859 | 2033200789 | | ✓ | ✓ | | | | ✓ | ✓ | | |
| 12 | 59860 | 2033200889 | | ✓ | | ✓ | | | ✓ | ✓ | | |
| 13 | 59864 | 2203520227 | | ✓ | ✓ | ✓ | | | ✓ | ✓ | | |
| 14 | 36987 | 2033331014 | ✓ | | ✓ | ✓ | | ✓ | ✓ | ✓ | ✓ | |
| 15 | 51851 | 2033500353 | | ✓ | ✓ | ✓ | | | ✓ | ✓ | ✓ | |

## MERCEDES-BENZ E- KLASSE T- Model (S210) 1996→03/03

| NR | MAPCO | REF | | | ← | → | ↑ | ↓ | | | NEW | INFO |
|---|---|---|---|---|---|---|---|---|---|---|---|---|
| 1 | 59847 | 1243200489 | ✓ | | ✓ | ✓ | | | ✓ | ✓ | | L= 200,0 mm 1 |

## MERCEDES-BENZ E- KLASSE W210 1995→03/02

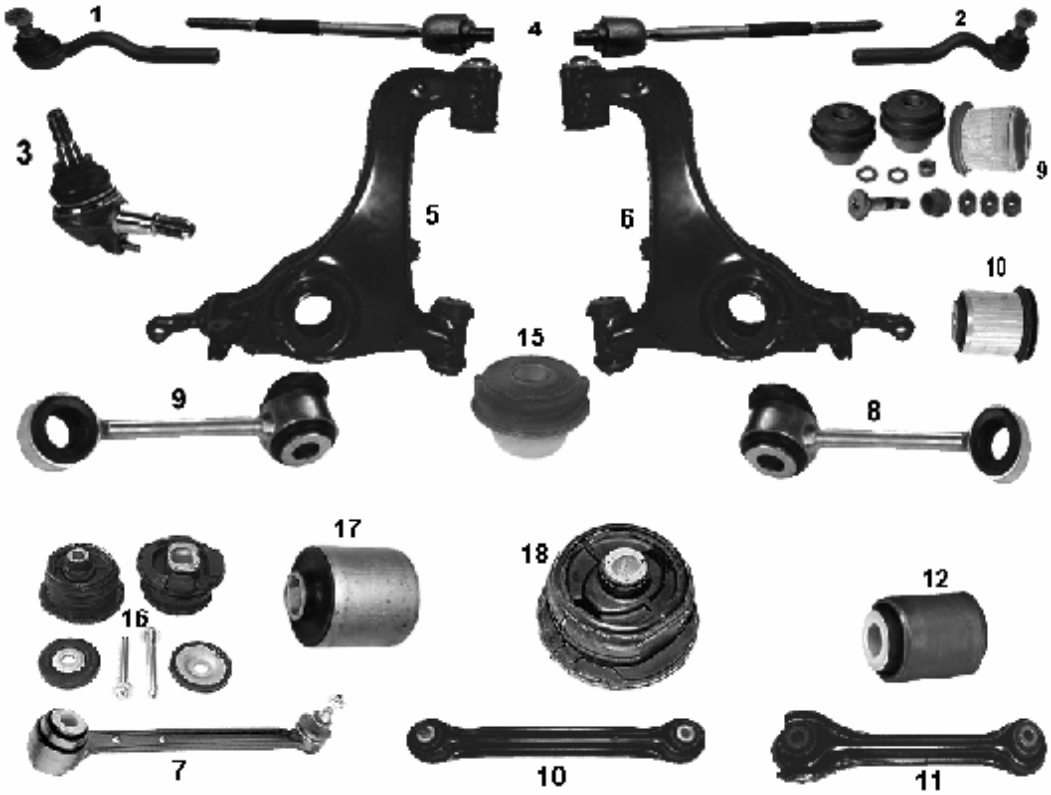


| NR | MAPCO | REF | | | ← | → | ↑ | ↓ | | | NEW | INFO |
|---|---|---|---|---|---|---|---|---|---|---|---|---|
| 1 | 49805 | 2103380515 | ✓ | | ✓ | ✓ | | | ✓ | ✓ | | M14x1,5RHT |
| 2 | 49806 | 2103380615 | ✓ | | ✓ | | | | ✓ | ✓ | | M14x1,5RHT |
| 3 | 49802 | 2103330427 | ✓ | | | ✓ | | | ✓ | ✓ | | |
| 4 | 49807 | 2103380415 | ✓ | | ✓ | ✓ | | | ✓ | ✓ | | M14x1,5RHT |
| 5 | 49808 | 2103306107 | ✓ | | ✓ | | | | ✓ | ✓ | | |
| 6 | 49809 | 2103306207 | ✓ | | | ✓ | | | ✓ | ✓ | | |
| 7 | 19832 | 2103500953 | | ✓ | ✓ | ✓ | | | ✓ | ✓ | | |
| 8 | 49811 | 2103203789 | ✓ | | | ✓ | | | ✓ | ✓ | | |
| 9 | 49812 | 2103203689 | ✓ | | ✓ | | | | ✓ | ✓ | | |
| 10 | 19819 | 1243500129 | | ✓ | ✓ | ✓ | | | ✓ | ✓ | | |
| 11 | 19820 | 2013505606 | | ✓ | ✓ | ✓ | | | ✓ | ✓ | | |
| 12 | 33973 | 2013528765 | | ✓ | ✓ | ✓ | | | ✓ | ✓ | | |
| 13 | 36909 | 2103300475 | ✓ | | ✓ | ✓ | | | ✓ | ✓ | | |
| 14 | 36910 | 2103336814 | ✓ | | ✓ | ✓ | | | ✓ | ✓ | | |
| 15 | 33979 | 2103335514 | ✓ | | ✓ | ✓ | | ✓ | ✓ | ✓ | | |
| 16 | 36973 | 2103505808 | | ✓ | ✓ | ✓ | | | ✓ | ✓ | ✓ | |
| 17 | 36987 | 2033331014 | ✓ | | ✓ | ✓ | | ✓ | ✓ | ✓ | ✓ | |
| 18 | 36796 | 2103510842 | | ✓ | ✓ | ✓ | | | ✓ | ✓ | ✓ | |

## MERCEDES-BENZ E- KLASSE W 211/ S 211 03/02→

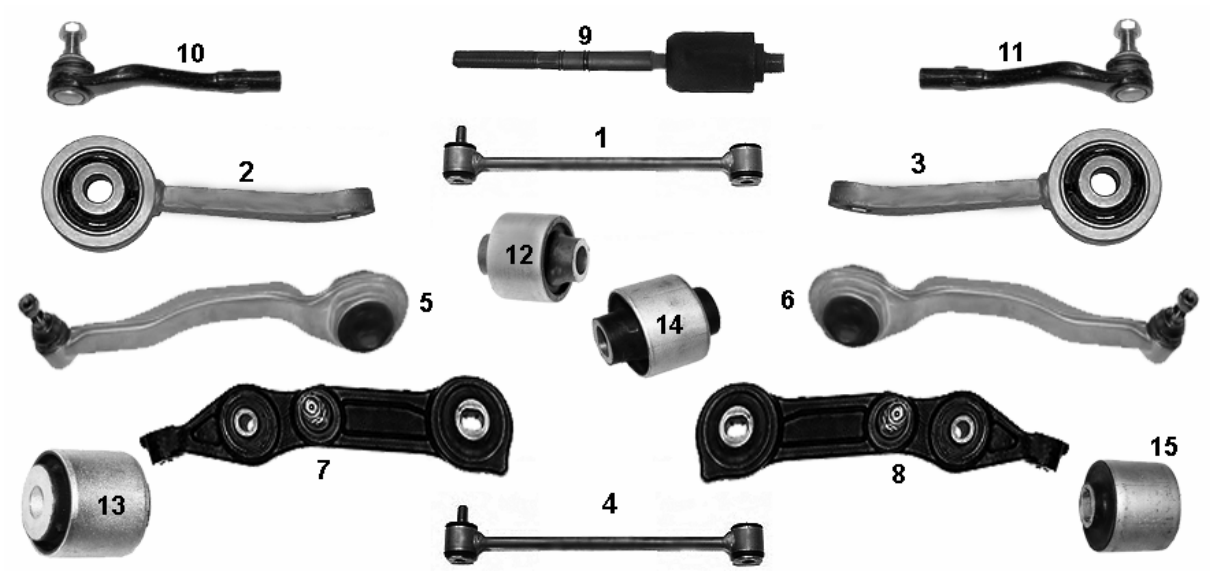


| NR | MAPCO | REF | | | ← | → | ↑ | ↓ | | | NEW | INFO |
|---|---|---|---|---|---|---|---|---|---|---|---|---|
| 1 | 59858HPS | 2113200889 | ✓ | | ✓ | ✓ | | | ✓ | ✓ | | |
| 2 | 59833 | 2113200989 | ✓ | | ✓ | | | | ✓ | ✓ | | |
| 3 | 59834 | 2113201089 | ✓ | | | ✓ | | | ✓ | ✓ | | |
| 4 | 59835 | 2113203389 | | ✓ | ✓ | ✓ | | | ✓ | ✓ | | |
| 5 | 51835 | 2303301711 | ✓ | | ✓ | | | | ✓ | ✓ | | |
| 6 | 51836 | 2303301811 | ✓ | | | ✓ | | | ✓ | ✓ | | |
| 7 | 51837 | 2113308107 | ✓ | | ✓ | | | | ✓ | ✓ | | hinten / rear |
| 8 | 51838 | 2113308207 | ✓ | | | ✓ | | | ✓ | ✓ | | hinten / rear |
| 9 | 51839 | 2113380015 | ✓ | | ✓ | ✓ | | | ✓ | | | ✓ **4 matic** |
| 10 | 51840 | 2113302503 | ✓ | | ✓ | | | | ✓ | ✓ | | M14x1,5RHT |
| 11 | 51841 | 2113300203 | ✓ | | | ✓ | | | ✓ | ✓ | | M14x1,5RHT |
| 12 | 33883 | 2113331114 | ✓ | | ✓ | ✓ | | ✓ | ✓ | ✓ | ✓ | |
| 13 | 36838 | 2303521565 | | ✓ | ✓ | ✓ | ✓ | | ✓ | ✓ | ✓ | |
| 14 | 36988 | 2113332914 | ✓ | | ✓ | ✓ | | ✓ | ✓ | ✓ | ✓ | |
| 15 | 36989 | 2113520865 | | ✓ | ✓ | ✓ | | | ✓ | ✓ | ✓ | |

## MERCEDES-BENZ S-KLASSE W 116 1972→07/80

| NR | MAPCO | REF | | | ← | → | ↑ | ↓ | | | NEW | INFO |
|---|---|---|---|---|---|---|---|---|---|---|---|---|
| 1 | 59897 | 0003385510 | ✓ | | ✓ | ✓ | | | ✓ | ✓ | | M14x1,5RHT 1 |

## MERCEDES-BENZ S-KLASSE W 126 — 1985→06/91

| NR | MAPCO | REF | | | ← | → | ↑ | ↓ | | | NEW | INFO |
|---|---|---|---|---|---|---|---|---|---|---|---|---|
| 1 | 49898 | 1263300303 | ✓ | | ✓ | | | | ✓ | ✓ | | |
| 2 | 49899 | 1263300203 | ✓ | | | ✓ | | | ✓ | ✓ | | |
| 3 | 49896 | 1263300607 | ✓ | | ✓ | | ✓ | | ✓ | ✓ | | |
| 4 | 49897 | 1263300707 | ✓ | | | ✓ | ✓ | | ✓ | ✓ | | |
| 5 | 33970 | 1263333814 | ✓ | | ✓ | ✓ | ✓ | | ✓ | ✓ | | |
| 6 | 33972 | 1264600819 | ✓ | | ✓ | ✓ | | | ✓ | ✓ | | |

## MERCEDES-BENZ S-KLASSE W 220 — 10/98→08/05

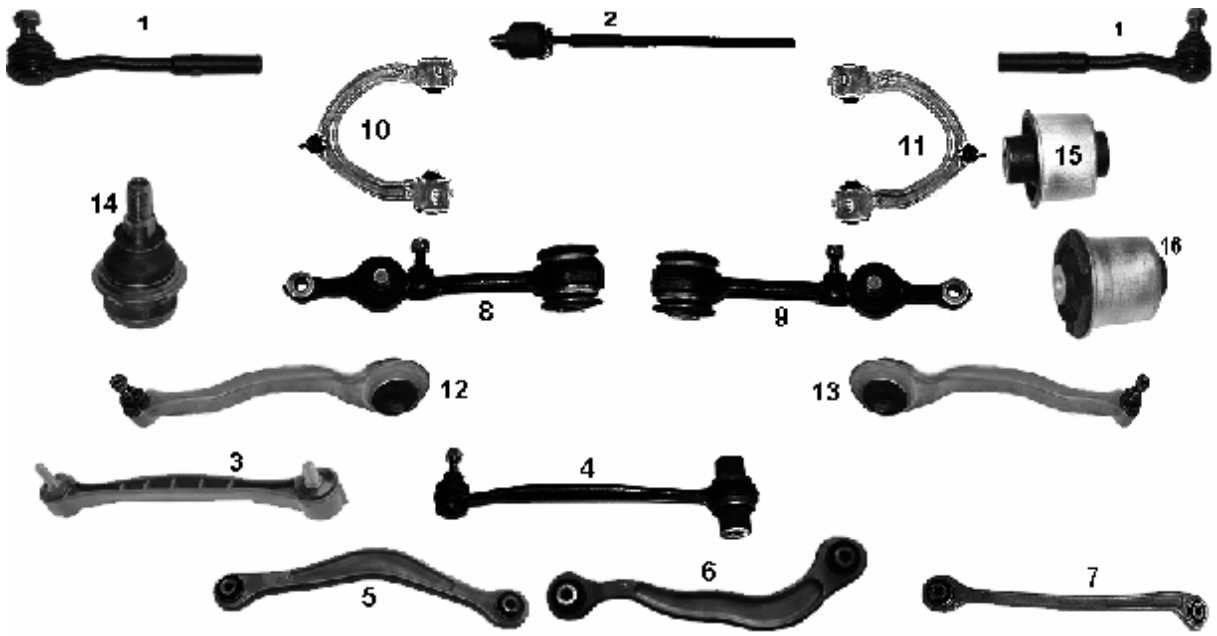


| NR | MAPCO | REF | | | ← | → | ↑ | ↓ | | | NEW | INFO |
|---|---|---|---|---|---|---|---|---|---|---|---|---|
| 1 | 59843 | 2303380115 | ✓ | | ✓ | ✓ | | | ✓ | ✓ | | |
| 2 | 59844 | 2303380015 | ✓ | | ✓ | ✓ | | | ✓ | ✓ | | |
| 3 | 59845 | 2203203689 | | ✓ | ✓ | | ✓ | | ✓ | ✓ | | |
| 4 | 59874 | 2203500453 | | ✓ | ✓ | ✓ | | | ✓ | ✓ | | 1 + 2 |
| 5 | 59876 | 2203502206 | | ✓ | | ✓ | ✓ | | ✓ | ✓ | | |
| 6 | 59877 | 2203502406 | | ✓ | ✓ | ✓ | ✓ | | ✓ | ✓ | | |
| 7 | 59878 | 2203502606 | | ✓ | ✓ | ✓ | | ✓ | ✓ | ✓ | | |
| 8 | 59879 | 2203308907 | ✓ | | ✓ | | | ✓ | ✓ | ✓ | | |
| 9 | 59880 | 2203309007 | ✓ | | | ✓ | | ✓ | ✓ | ✓ | | |
| 10 | 51830 | 2203309307 | ✓ | | ✓ | | ✓ | | ✓ | ✓ | | |
| 11 | 51831 | 2203308407 | ✓ | | | ✓ | ✓ | | ✓ | ✓ | | |
| 12 | 51832 | 2203304311 | ✓ | | ✓ | | | ✓ | ✓ | ✓ | | |
| 13 | 51833 | 2203304411 | ✓ | | | ✓ | | ✓ | ✓ | ✓ | | |
| 14 | 51834 | 2203330727 | ✓ | | ✓ | ✓ | | ✓ | ✓ | ✓ | | |
| 15 | 36832 | 2203331814 | ✓ | | ✓ | ✓ | | | ✓ | ✓ | ✓ | |
| 16 | 36833 | 2303330314 | ✓ | | ✓ | ✓ | ✓ | | ✓ | ✓ | ✓ | |

## MERCEDES-BENZ SL ( R129 ) 03/89→10/01

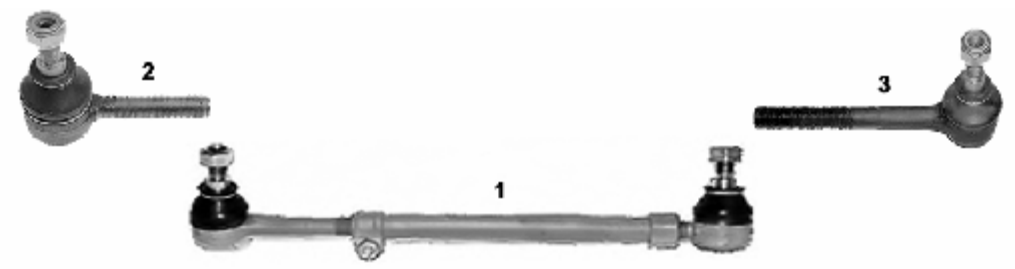


| NR | MAPCO | REF | | | ← | → | ↑ | ↓ | | | NEW | INFO |
|---|---|---|---|---|---|---|---|---|---|---|---|---|
| 1 | 59865 | 1293300203 | ✓ | | ✓ | ✓ | | | ✓ | ✓ | | |
| 2 | 59866 | 0013305235 | ✓ | | ✓ | ✓ | | | ✓ | ✓ | | M14x1,5RHT innen/inner |
| 3 | 59867 | 0013305335 | ✓ | | ✓ | ✓ | | | ✓ | ✓ | | M14x1,5LHT aussen/outside |
| | | | | | | | | | | | | |

## MERCEDES-BENZ SPRINTER W 902 1997→05/06

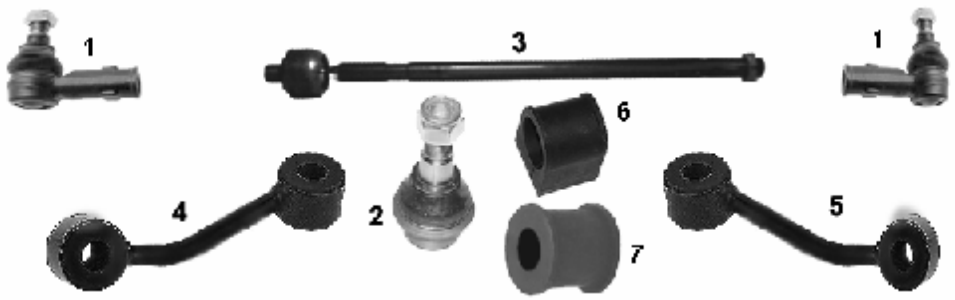


| NR | MAPCO | REF | | | ← | → | ↑ | ↓ | | | NEW | INFO |
|---|---|---|---|---|---|---|---|---|---|---|---|---|
| 1 | 49830 | 9014600148 | ✓ | | ✓ | ✓ | | | ✓ | ✓ | | M16 x 1,5 RHT |
| 2 | 49831 | 9013330727 | ✓ | | ✓ | ✓ | | | ✓ | ✓ | | |
| 3 | 49833 | 9014600155 | ✓ | | ✓ | ✓ | | | ✓ | ✓ | | M16 x 1,5 RHT |
| 4 | 59854 | 9013200289 | ✓ | | ✓ | | | | ✓ | ✓ | | |
| 5 | 59855 | 9013200389 | ✓ | | | ✓ | | | ✓ | ✓ | | |
| 6 | 33947 | 9043230085 | ✓ | | ✓ | ✓ | | | ✓ | ✓ | | ☑ 4x4, Ø 25,0 mm |
| 7 | 36947 | 9013230285 | ✓ | | ✓ | ✓ | | | ✓ | ✓ | ✓ | Ø 26,0 mm |

## MERCEDES-BENZ SPRINTER 4t (904) Kasten 75 KW 02/96→05/06

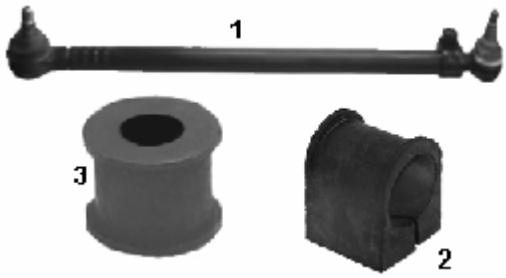


| NR | MAPCO | REF | | | ← | → | ↑ | ↓ | | | NEW | INFO |
|---|---|---|---|---|---|---|---|---|---|---|---|---|
| 1 | 49844 | 3094603105 | ✓ | | ✓ | ✓ | | | ✓ | ✓ | | |
| 2 | 33947 | 9043230085 | ✓ | | ✓ | ✓ | | | ✓ | ✓ | | Ø 25,0 mm |
| 3 | 36947 | 9013230285 | ✓ | | ✓ | ✓ | | | ✓ | ✓ | ✓ | Ø 26,0 mm |

## MERCEDES-BENZ VITO (638) 02/96 →07/03

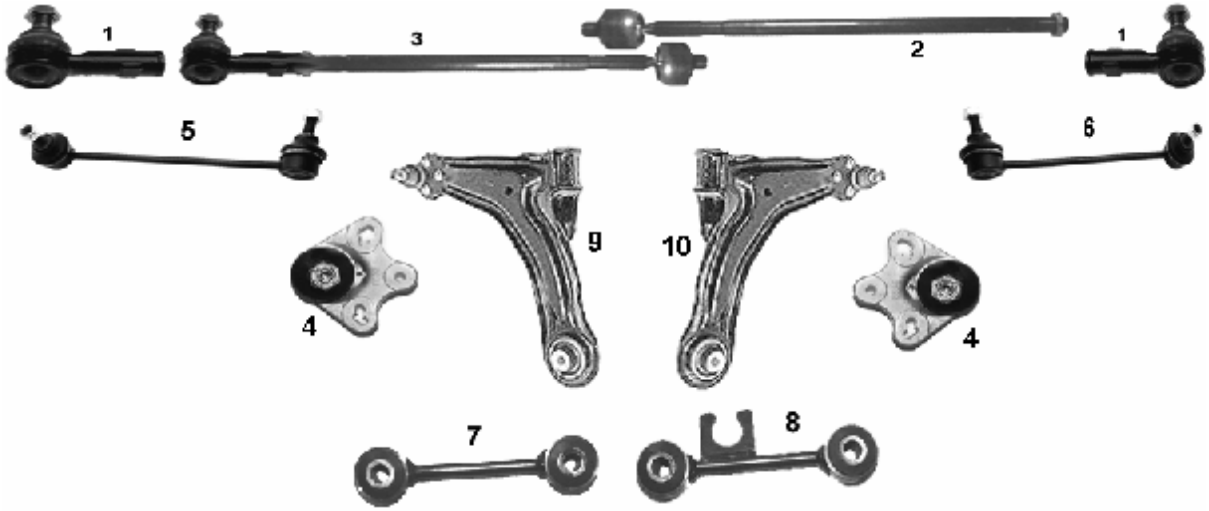


| NR | MAPCO | REF | | | ← | → | ↑ | ↓ | | | NEW | INFO |
|---|---|---|---|---|---|---|---|---|---|---|---|---|
| 1 | 49836 | 6384600048 | ✓ | | ✓ | ✓ | | | ✓ | ✓ | | |
| 2 | 49837 | 6384600255 | ✓ | | ✓ | ✓ | | | ✓ | ✓ | | |
| 3 | 49838 | | ✓ | | ✓ | ✓ | | | ✓ | ✓ | | 1 + 2 |
| 4 | 49839 | 6383330027 | ✓ | | ✓ | ✓ | | | ✓ | ✓ | | |
| 5 | 49841 | 6383230268 | ✓ | | ✓ | | | | ✓ | ✓ | | |
| 6 | 49840 | 6383230368 | ✓ | | | ✓ | | | ✓ | ✓ | | |
| 7 | 49842 | 6383260016 | | ✓ | ✓ | ✓ | | | ✓ | ✓ | | |
| 8 | 49843 | 6383260116 | | ✓ | ✓ | ✓ | | | ✓ | ✓ | | |
| 9 | 59801 | 6383300010 | ✓ | | ✓ | | | ✓ | ✓ | ✓ | | |
| 10 | 59802 | 6383300110 | ✓ | | | ✓ | | ✓ | ✓ | ✓ | | |

## MERCEDES-BENZ M-Klasse (W163 ) 02/98 →06/05

| NR | MAPCO | REF | | | ← | → | ↑ | ↓ | | | NEW | INFO |
|---|---|---|---|---|---|---|---|---|---|---|---|---|
| 1 | 59872 | 1633380015 | ✓ | | ✓ | | | | ✓ | ✓ | | |
| 2 | 59873 | 1633380115 | ✓ | | | ✓ | | | ✓ | ✓ | | |
| 3 | 59832 | 1633300135 | ✓ | | ✓ | ✓ | | ✓ | ✓ | ✓ | | M14x1,5 Konus 20,0 mm |
| 4 | 51842 | 1633520401 | | ✓ | ✓ | | ✓ | | ✓ | ✓ | ✓ | |
| 5 | 51843 | 1633520101 | | ✓ | | ✓ | ✓ | | ✓ | ✓ | ✓ | |
| 6 | 51844 | 1633200190 | ✓ | | ✓ | | | | ✓ | ✓ | ✓ | |
| 7 | 51845 | 1633200090 | ✓ | | | ✓ | | | ✓ | ✓ | ✓ | |
| 8 | 59838 | 1633500113 | | ✓ | ✓ | ✓ | | | ✓ | ✓ | ✓ | |

## MERCEDES-BENZ G-Klasse (W460 ) 03/79 → 12/92

| NR | MAPCO | REF | | | ← | → | ↑ | ↓ | | | NEW | INFO |
|---|---|---|---|---|---|---|---|---|---|---|---|---|
| 1 | 49881 | 6313300435 | ✓ | | ✓ | | | | ✓ | ✓ | | M20x1,5LHT |
| 2 | 49882 | 4603301235 | ✓ | | | ✓ | | | ✓ | ✓ | | M20x1,5RHT |

## MERCEDES-BENZ T1(601), (602) 1977 → 02/96

| NR | MAPCO | REF | | | ← | → | ↑ | ↓ | | | NEW | INFO |
|---|---|---|---|---|---|---|---|---|---|---|---|---|
| 1 | 49844 | 3094603105 | ✓ | | ✓ | ✓ | | | ✓ | ✓ | | , 486mm |
| 2 | 49845 | 6014601205 | ✓ | | ✓ | | | | ✓ | ✓ | | 483mm |
| 3 | 49846 | 6023300103 | ✓ | | ✓ | ✓ | | | ✓ | ✓ | | 1352mm |
| 4 | 49847 | 0004608548 | ✓ | | ✓ | ✓ | | | ✓ | ✓ | | M22x1,5 , 95mm |
| 5 | 49848 | 0004608648 | ✓ | | ✓ | ✓ | | | ✓ | ✓ | | M22x1,5 LHT , 245mm |
| 6 | 49849 | 6023305835 | ✓ | | ✓ | | | | ✓ | ✓ | | M24x1,5 , 115mm |
| 7 | 49880 | 6023305735 | ✓ | | | ✓ | | | ✓ | ✓ | | M24x1,5 , 115mm |
| 8 | 33946 | 6013210350 | ✓ | | ✓ | ✓ | | | ✓ | ✓ | | Ø innen/inner 12mm |
| 9 | 36925 | 6023240050 | | ✓ | ✓ | ✓ | | | ✓ | ✓ | ✓ | |
| 10 | 36926 | 6023260282 | ✓ | | ✓ | ✓ | | | ✓ | ✓ | ✓ | Ø innen/inner 32,0mm |

## MERCEDES-BENZ T1/ TN 07/81 → 06/95

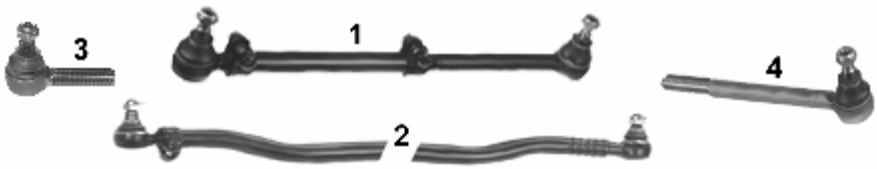


| NR | MAPCO | REF | | | ← | → | ↑ | ↓ | | | NEW | INFO |
|---|---|---|---|---|---|---|---|---|---|---|---|---|
| 1 | 49845 | 6014601205 | ✓ | | ✓ | | | | ✓ | ✓ | | 483mm |
| 2 | 49846 | 6023300103 | ✓ | | ✓ | ✓ | | | ✓ | ✓ | | 1352mm |
| 3 | 49847 | 0004608548 | ✓ | | ✓ | ✓ | | | ✓ | ✓ | | M22x1,5 , 95mm |
| 4 | 49848 | 0004608648 | ✓ | | ✓ | ✓ | | | ✓ | ✓ | | M22x1,5 LHT , 245mm |

## MERCEDES-BENZ T2/L 1968→ 12/88

| NR | MAPCO | REF | | | ← | → | ↑ | ↓ | | | NEW | INFO |
|---|---|---|---|---|---|---|---|---|---|---|---|---|
| 1 | 49844 | 3094603105 | ✓ | | ✓ | ✓ | | | ✓ | ✓ | | , 486mm |

## MERCEDES-BENZ 100 (631) 12/90→ 12/96

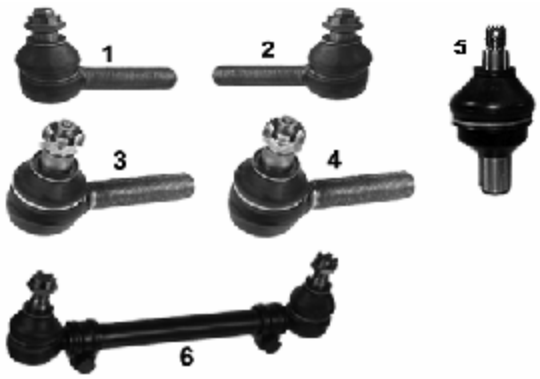


| NR | MAPCO | REF | | | ← | → | ↑ | ↓ | | | NEW | INFO |
|---|---|---|---|---|---|---|---|---|---|---|---|---|
| 1 | 49881 | 6313300435 | ✓ | | ✓ | | | | ✓ | ✓ | | M20x1,5LHT |
| 2 | 49882 | 4603301235 | ✓ | | | ✓ | | | ✓ | ✓ | | M20x1,5RHT |
| 3 | 49883 | 6313380410 | ✓ | | ✓ | ✓ | | | ✓ | ✓ | | innen/inner M18x1,5LHT , 95mm |
| 4 | 49884 | 3094603105 | ✓ | | ✓ | ✓ | | | ✓ | ✓ | | aussen/outside M18x1,5RHT , 95mm |
| 5 | 59898 | 0003200028 | ✓ | | ✓ | ✓ | ✓ | ✓ | ✓ | ✓ | | |
| 6 | 49886 | 6313300703 | ✓ | | ✓ | ✓ | | | ✓ | ✓ | | aussen/outside |

## MERCEDES-BENZ O 100 City 01/94 →

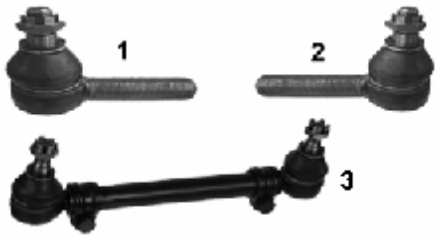


| NR | MAPCO | REF | | | ← | → | ↑ | ↓ | | | NEW | INFO |
|---|---|---|---|---|---|---|---|---|---|---|---|---|
| 1 | 49881 | 6313300435 | ✓ | | ✓ | | | | ✓ | ✓ | | M20x1,5LHT |
| 2 | 49882 | 4603301235 | ✓ | | | ✓ | | | ✓ | ✓ | | M20x1,5RHT |
| 3 | 49886 | 6313300703 | ✓ | | ✓ | ✓ | | | ✓ | ✓ | | aussen/outside |

# MINI

## MINI COOPER 06/01→
## MINI COOPER S - ONE 03/02→

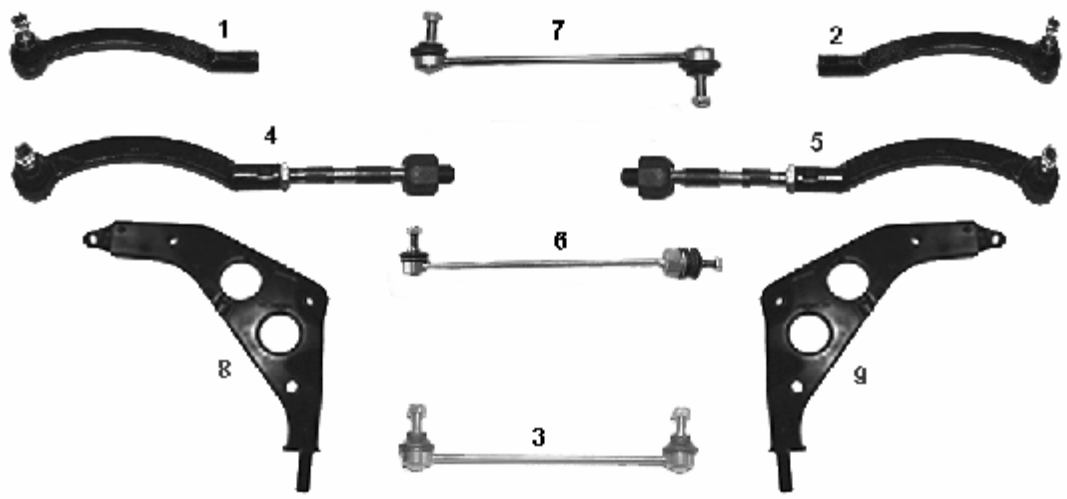


| NR | MAPCO | REF | | | ← | → | ↑ | ↓ | | | NEW | INFO |
|---|---|---|---|---|---|---|---|---|---|---|---|---|
| 1 | 59690 | 32216754565 | ✓ | | ✓ | | | | ✓ | ✓ | | |
| 2 | 59691 | 32216754566 | ✓ | | | ✓ | | | ✓ | ✓ | | |
| 3 | 59694 | 35551507999 | | ✓ | ✓ | ✓ | | | ✓ | ✓ | | |
| 4 | 59692 | 32116754563 | ✓ | | ✓ | | | | ✓ | ✓ | | |
| 5 | 59693 | 32116754564 | ✓ | | | ✓ | | | ✓ | ✓ | | |
| 6 | 59695 | 31351507989 | ✓ | | ✓ | ✓ | | | ✓ | ✓ | | |
| 7 | 59614 | 31356759537 | ✓ | | ✓ | ✓ | | | ✓ | ✓ | | |
| 8 | 51663 | 31121492144 | ✓ | | ✓ | | | | ✓ | ✓ | ✓ | |
| 9 | 51664 | 31126761410 | ✓ | | | ✓ | | | ✓ | ✓ | ✓ | |

# MITSUBISHI

## MITSUBISHI CARISMA 07/95→
## MITSUBISHI CARISMA 06/96→

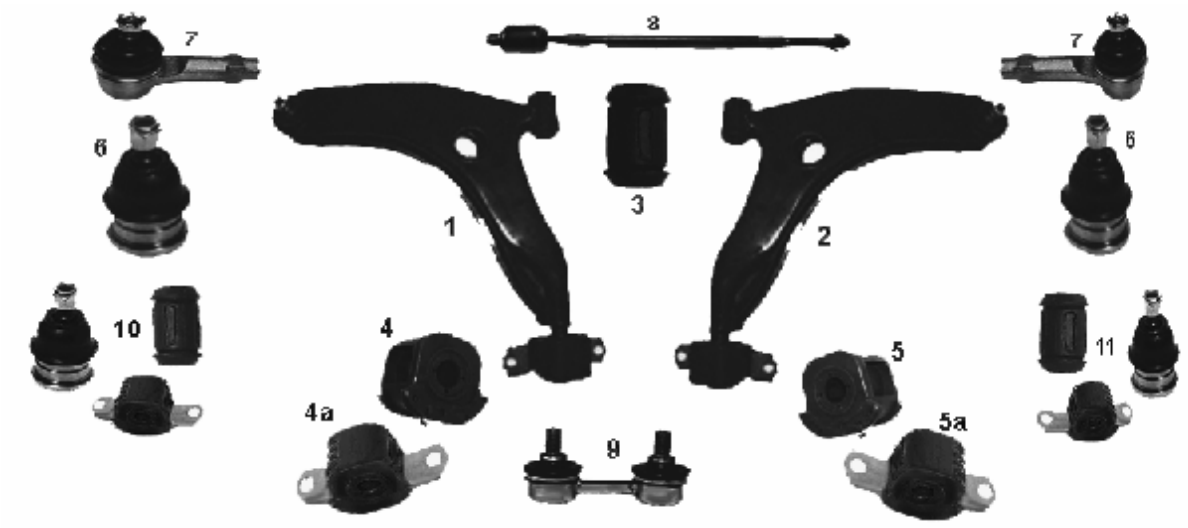


| NR | MAPCO | REF | | | ← | → | ↑ | ↓ | | | NEW | INFO |
|---|---|---|---|---|---|---|---|---|---|---|---|---|
| 1 | 49544 | MR 915769 | ✓ | | ✓ | | | | ✓ | ✓ | | →02/99 |
| 2 | 49545 | MR 915770 | ✓ | | | ✓ | | | ✓ | ✓ | | →02/99 |
| 3 | 33552 | MR 130982 | ✓ | | ✓ | ✓ | | | ✓ | ✓ | | |
| 4 | 33551 | MB 808909 | ✓ | | ✓ | | | | ✓ | ✓ | | |
| 4a | 33551/1 | MB 808909 | ✓ | | ✓ | | | | ✓ | ✓ | | |
| 5 | 33550 | MB 808910 | ✓ | | | ✓ | | | ✓ | ✓ | | |
| 5a | 33550/1 | MB 808910 | ✓ | | | ✓ | | | ✓ | ✓ | | |
| 6 | 49578 | MB 241833 | ✓ | | ✓ | ✓ | | | ✓ | ✓ | | →02/99 |
| 7 | 19540 | MB 912076 | ✓ | | ✓ | ✓ | | | ✓ | ✓ | | M12 x1,25 RHT |
| 8 | 59536 | MR 244901 | ✓ | | ✓ | ✓ | | | ✓ | ✓ | | |
| 9 | 49245 | MR 272117 | | ✓ | ✓ | ✓ | | | ✓ | ✓ | | |
| 10 | 19255 | | ✓ | | ✓ | | | | ✓ | ✓ | | Kit →02/99 |
| 11 | 19256 | | ✓ | | | ✓ | | | ✓ | ✓ | | Kit →02/99 |

## MITSUBISHI COLT – LANCER III 10/83→12/85

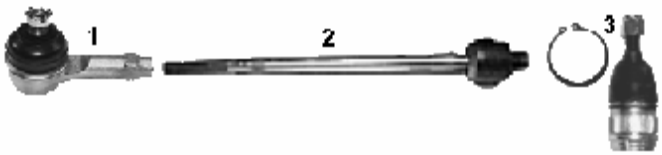


| NR | MAPCO | REF | | | ← | → | ↑ | ↓ | | | NEW | INFO |
|---|---|---|---|---|---|---|---|---|---|---|---|---|
| 1 | 19540 | MB 527169 | ✓ | | ✓ | ✓ | | | ✓ | ✓ | | M12 x1,25 RHT |
| 2 | 19541 | MB 532046 | ✓ | | ✓ | ✓ | | | | ✓ | | M12 x1,25 RHT |
| 3 | 19542 | MB 001696 | ✓ | | ✓ | ✓ | | | ✓ | ✓ | | |

## MITSUBISHI COLT III – LANCER IV 01/86→05/92

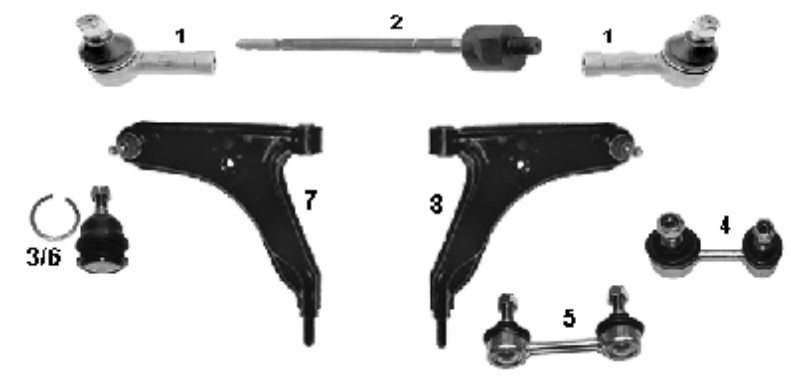


| NR | MAPCO | REF | | | ← | → | ↑ | ↓ | | | NEW | INFO |
|---|---|---|---|---|---|---|---|---|---|---|---|---|
| 1 | 19547 | MB 527169 | ✓ | | ✓ | ✓ | | | ✓ | ✓ | | 1988→1992 |
| 2 | 19550 | MB 553249 | ✓ | | ✓ | ✓ | | | ✓ | ✓ | | |
| 3 | 19542 | MB912076 | ✓ | | ✓ | ✓ | | | ✓ | ✓ | | |
| 4 | 19543 | MB 518892 | ✓ | | ✓ | ✓ | | | ✓ | ✓ | | |
| 5 | 19544 | MB 809354 | | ✓ | ✓ | ✓ | | | ✓ | ✓ | | |
| 6 | 49578 | MB 241833 | ✓ | | ✓ | ✓ | | | ✓ | ✓ | | 1988→1992 |
| 7 | 59356 | MB 518806 | ✓ | | ✓ | | | | ✓ | ✓ | | |
| 8 | 59357 | MB 518807 | ✓ | | | ✓ | | | ✓ | ✓ | | |

## MITSUBISHI COLT IV – LANCER V (CB/D_A) 06/92 →12/95

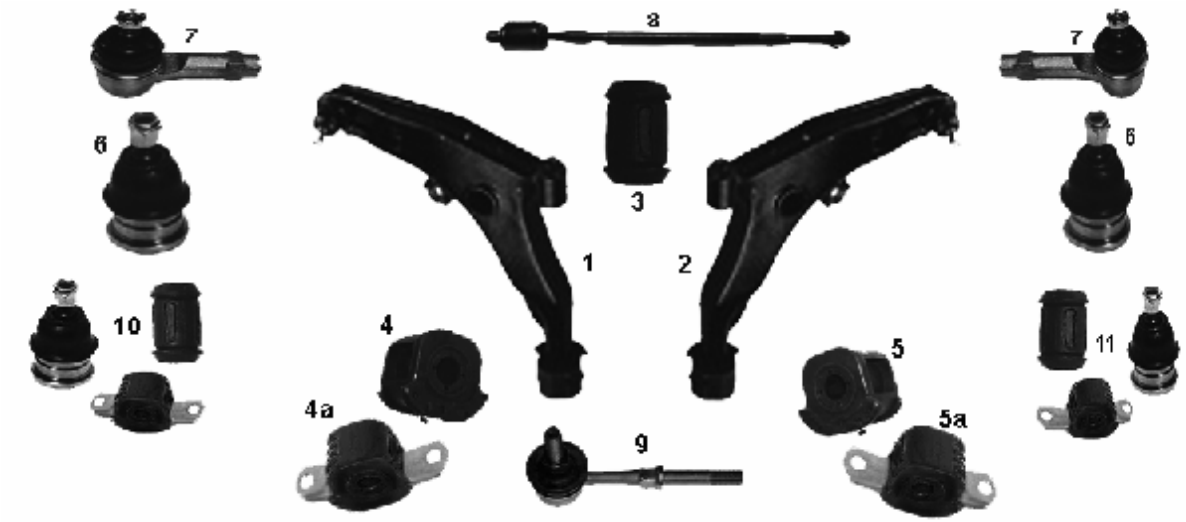


| NR | MAPCO | REF | | | ← | → | ↑ | ↓ | | | NEW | INFO |
|---|---|---|---|---|---|---|---|---|---|---|---|---|
| 1 | 49540 | MB 912077 | ✓ | | ✓ | | | | ✓ | ✓ | | 1988→1992 |
| 2 | 49541 | MB 912078 | ✓ | | | ✓ | | | ✓ | ✓ | | |
| 3 | 33552 | MR 130982 | ✓ | | ✓ | ✓ | | | ✓ | ✓ | | |
| 4 | 33551 | MB 808909 | ✓ | | ✓ | | | | ✓ | ✓ | | |
| 4a | 33551/1 | MB 808909 | ✓ | | ✓ | | | | ✓ | ✓ | | |
| 5 | 33550 | MB 808910 | ✓ | | | ✓ | | | ✓ | ✓ | | |
| 5a | 33550/1 | MB 808910 | ✓ | | | ✓ | | | ✓ | ✓ | | |
| 6 | 49578 | MB 241833 | ✓ | | | ✓ | | | ✓ | ✓ | | 02/94→ 04/96 |
| 7 | 19547 | MB 527169 | ✓ | | ✓ | ✓ | | | ✓ | ✓ | | 1988→12/95 |
| 8 | 59308 | MR 130807 | ✓ | | ✓ | | | | ✓ | ✓ | | M12x1,25RHT 315 mm |
| 9 | 59309 | MB 809355 | | ✓ | ✓ | ✓ | | | ✓ | ✓ | | ✓1.8 Gti |
| 10 | 19255 | | ✓ | | ✓ | | | | ✓ | ✓ | | Kit |
| 11 | 19256 | | ✓ | | | ✓ | | | ✓ | ✓ | | Kit |

## MITSUBISHI COLT V (CJ_A), LANCER VI (CK/P_A) 12/95→

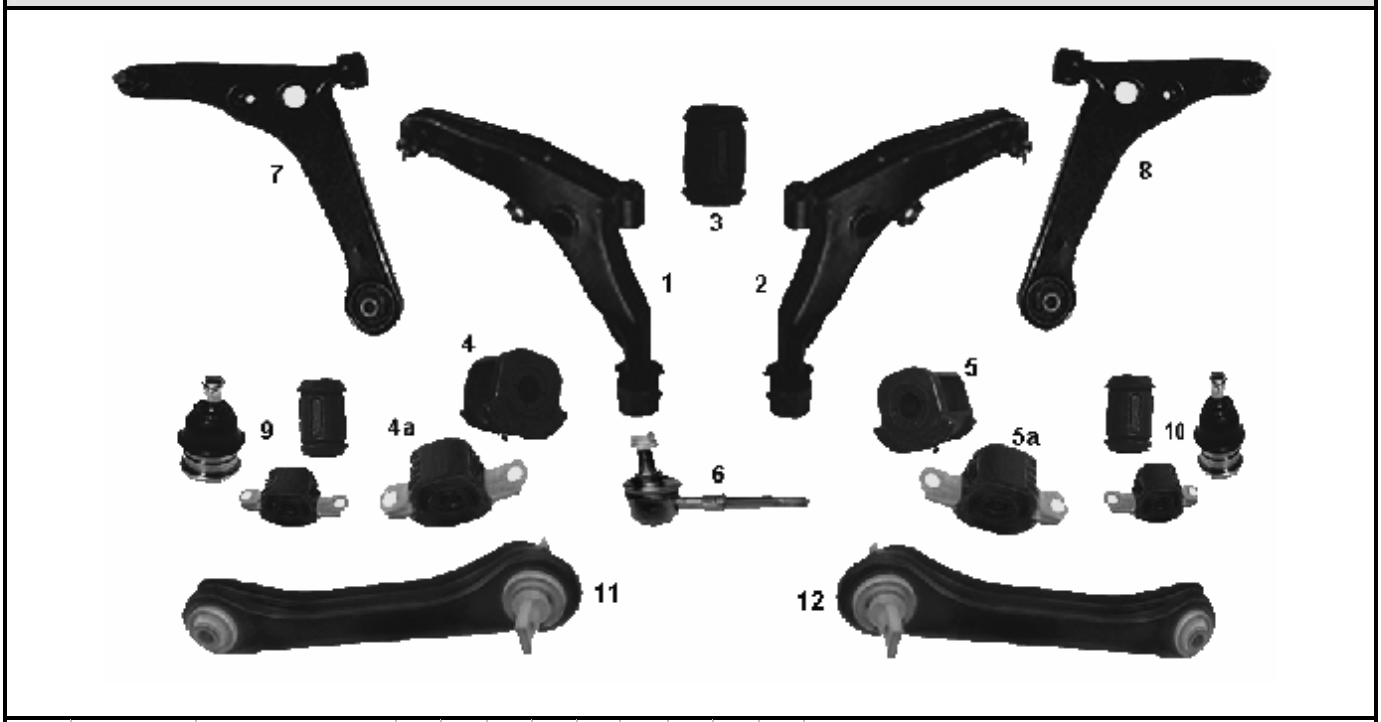


| NR | MAPCO | REF | | | ← | → | ↑ | ↓ | | | NEW | INFO |
|---|---|---|---|---|---|---|---|---|---|---|---|---|
| 1 | 49542 | MR 241341 | ✓ | | ✓ | | | | ✓ | ✓ | | → 12/00 |
| 2 | 49543 | MR 241342 | ✓ | | | ✓ | | | ✓ | ✓ | | → 12/00 |
| 3 | 33552 | MR 130982 | ✓ | | ✓ | | | | ✓ | ✓ | | |
| 4 | 33551 | MB 808909 | ✓ | | ✓ | | | | ✓ | ✓ | | → 12/00 |
| 4a | 33551/1 | MB 808909 | ✓ | | ✓ | | | | ✓ | ✓ | | → 12/00 |
| 5 | 33550 | MB 808910 | ✓ | | | ✓ | | | ✓ | ✓ | | → 12/00 |
| 5a | 33550/1 | MB 808910 | ✓ | | | ✓ | | | ✓ | ✓ | | → 12/00 |
| 6 | 59540 | MB 518780 | ✓ | | ✓ | ✓ | | | ✓ | ✓ | | |
| 7 | 59283 | MR 403419 | ✓ | | ✓ | | | | ✓ | ✓ | | 01/01→ |
| 8 | 59284 | MR 403420 | ✓ | | | ✓ | | | ✓ | ✓ | | 01/01→ |
| 9 | 19255 | | ✓ | | ✓ | | | | ✓ | ✓ | | Kit |
| 10 | 19256 | | ✓ | | | ✓ | | | ✓ | ✓ | | Kit |
| 11 | 59396 | MB 809220 | | ✓ | ✓ | | | | ✓ | ✓ | | |
| 12 | 59397 | MB 809221 | | ✓ | | ✓ | | | ✓ | ✓ | | |

## MITSUBISHI ECLIPSE I + II 04/91→

| NR | MAPCO | REF | | | ← | → | ↑ | ↓ | | | NEW | INFO |
|---|---|---|---|---|---|---|---|---|---|---|---|---|
| 1 | 49241 | MR 296295 | ✓ | | ✓ | | | | ✓ | ✓ | | |
| 2 | 49242 | MR 296296 | ✓ | | | ✓ | | | ✓ | ✓ | | |

## MITSUBISHI GALANT II, III, IV 1980→ 10/92

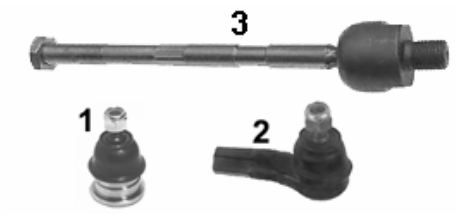


| NR | MAPCO | REF | | | ← | → | ↑ | ↓ | | | NEW | INFO |
|---|---|---|---|---|---|---|---|---|---|---|---|---|
| 1 | **49578** | MB 241833 | ✓ | | ✓ | | | | ✓ | ✓ | | |
| 2 | **49256** | MB 192430 | ✓ | | | ✓ | | | ✓ | ✓ | | |
| 3 | **59307** | MB 949343 | ✓ | | ✓ | ✓ | | | ✓ | ✓ | | 06/88-> M14x1,5RHT 235,0 mm |
| | | | | | | | | | | | | |

## MITSUBISHI GALANT V 11/92→ 08/96

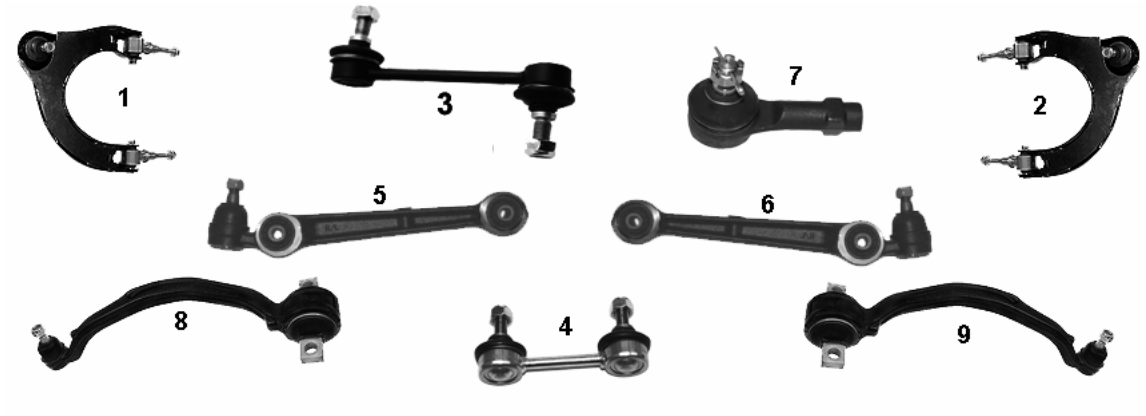


| NR | MAPCO | REF | | | ← | → | ↑ | ↓ | | | NEW | INFO |
|---|---|---|---|---|---|---|---|---|---|---|---|---|
| 1 | **49243** | MB 912505 | ✓ | | ✓ | | ✓ | | ✓ | ✓ | | |
| 2 | **49244** | MB 912506 | ✓ | | | ✓ | ✓ | | ✓ | ✓ | | |
| 3 | **59541** | MB 892981 | ✓ | | ✓ | ✓ | | | ✓ | ✓ | | |
| 4 | **59542** | MB 518892 | | ✓ | ✓ | ✓ | | | ✓ | ✓ | | |
| 5 | **49241** | MR 296295 | ✓ | | ✓ | | | | ✓ | ✓ | | |
| 6 | **49242** | MR 296296 | ✓ | | | ✓ | | | ✓ | ✓ | | |
| 7 | **49256** | MB 192430 | ✓ | | ✓ | ✓ | | | ✓ | ✓ | | |
| 8 | **59398** | MB912511 | ✓ | | ✓ | | | ✓ | ✓ | ✓ | | |
| 9 | **59399** | MB912512 | ✓ | | | ✓ | | ✓ | ✓ | ✓ | | |
| | | | | | | | | | | | | |

## MITSUBISHI GALANT VI (EA_) 09/96→

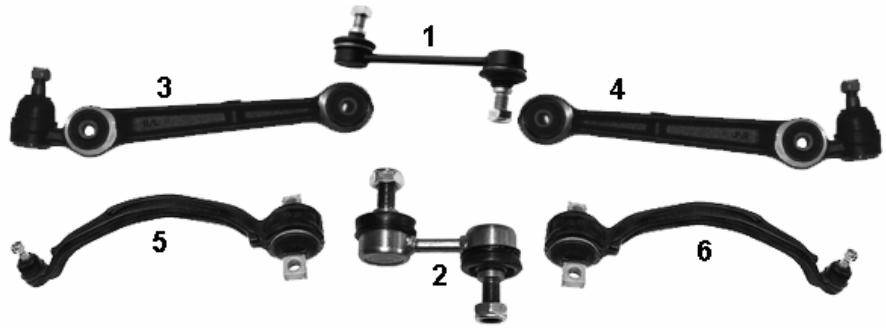


| NR | MAPCO | REF | | | ← | → | ↑ | ↓ | | | NEW | INFO |
|---|---|---|---|---|---|---|---|---|---|---|---|---|
| 1 | **59541** | MB 892981 | ✓ | | ✓ | ✓ | | | ✓ | ✓ | | |
| 2 | **59543** | MB 131732 | | ✓ | ✓ | ✓ | | | ✓ | ✓ | | |
| 3 | **49241** | MR 296295 | ✓ | | ✓ | | | | ✓ | ✓ | | |
| 4 | **49242** | MR 296296 | ✓ | | | ✓ | | | ✓ | ✓ | | |
| 5 | **59398** | MB912511 | ✓ | | ✓ | | | ✓ | ✓ | ✓ | | |
| 6 | **59399** | MB912512 | ✓ | | | ✓ | | ✓ | ✓ | ✓ | | |

## MITSUBISHI L200 1987 → 1998

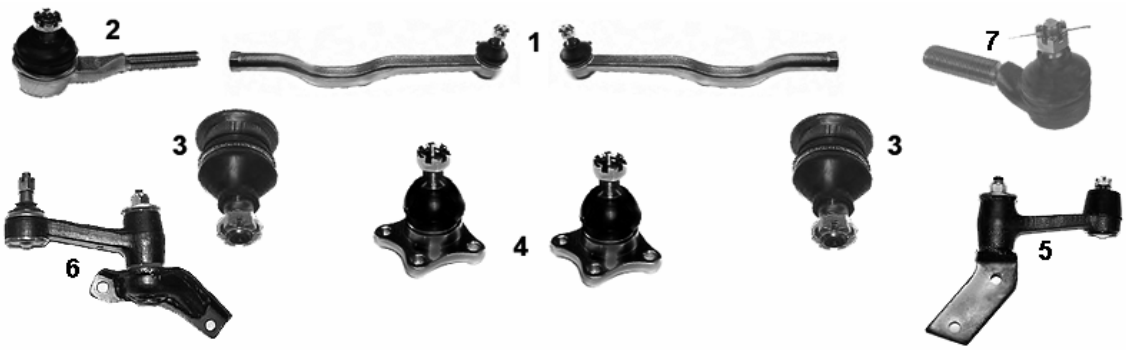


| NR | MAPCO | REF | | | ← | → | ↑ | ↓ | | | NEW | INFO |
|---|---|---|---|---|---|---|---|---|---|---|---|---|
| 1 | **59222** | MB 122011 | ✓ | | ✓ | ✓ | | | ✓ | ✓ | | innen/inner |
| 2 | **59221** | MB 166982 | ✓ | | ✓ | ✓ | | | ✓ | ✓ | | außen / outside / extérieure |
| 3 | **59223** | MB 109585 | ✓ | | ✓ | ✓ | ✓ | | ✓ | ✓ | | |
| 4 | **59224** | MB 241818 | ✓ | | ✓ | ✓ | | ✓ | ✓ | ✓ | | |
| 5 | **59303** | MB 527228 | ✓ | | ✓ | ✓ | | | ✓ | ✓ | | **RHD** |
| 6 | **59304** | MB 241423 | ✓ | | ✓ | ✓ | | | ✓ | ✓ | | **LHD** |
| 7 | **59373** | MB 564855 | ✓ | | ✓ | ✓ | | | ✓ | ✓ | | ☑ **2.5 D+TD** außen / outside / extérieure M16x1,5 LHT |
| | | | | | | | | | | | | |

## MITSUBISHI L300 Bus 11/84 → 1994

| NR | MAPCO | REF | | | ← | → | ↑ | ↓ | | | NEW | INFO |
|---|---|---|---|---|---|---|---|---|---|---|---|---|
| 1 | 49249 | MB166427 | ✓ | | ✓ | ✓ | | | ✓ | ✓ | | innen/inner |
| 2 | 49247 | MB 527349 | ✓ | | ✓ | ✓ | ✓ | | ✓ | ✓ | | |
| 3 | 49248 | MB 527383-01 | ✓ | | ✓ | ✓ | | | ✓ | ✓ | | |
| 4 | 49940 | MB 430112 | ✓ | | ✓ | | | ✓ | ✓ | ✓ | | |
| 5 | 49941 | MB 430113 | ✓ | | | ✓ | | | ✓ | ✓ | | |
| 6 | 59310 | MB 527650 | ✓ | | ✓ | ✓ | | | ✓ | ✓ | | aussen/outside M14x1,5 LHT |
| 7 | 59306 | MB 532971 | ✓ | | ✓ | ✓ | | | | ✓ | | |

## MITSUBISHI L300 Pritsche 1981 → 1994

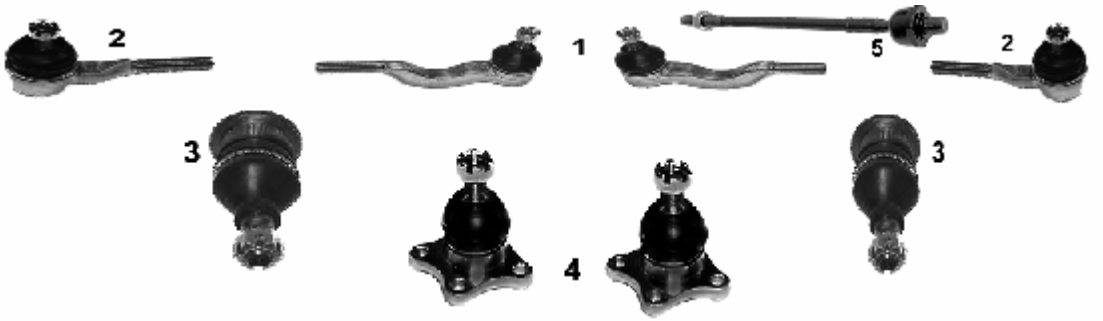


| NR | MAPCO | REF | | | ← | → | ↑ | ↓ | | | NEW | INFO |
|---|---|---|---|---|---|---|---|---|---|---|---|---|
| 1 | 59220 | MB 166980 | ✓ | | ✓ | ✓ | | | ✓ | ✓ | | innen/inner |
| 2 | 59221 | MB 166982 | ✓ | | ✓ | ✓ | | | ✓ | ✓ | | aussen/outside |
| 3 | 59223 | MB 109585 | ✓ | | ✓ | ✓ | ✓ | | ✓ | ✓ | | |
| 4 | 59224 | MB 241818 | ✓ | | ✓ | | | ✓ | ✓ | ✓ | | |
| 5 | 59306 | MB 532971 | ✓ | | ✓ | ✓ | | | | ✓ | | |

## MITSUBISHI PAJERO I - MONTERO 1982 → 1990

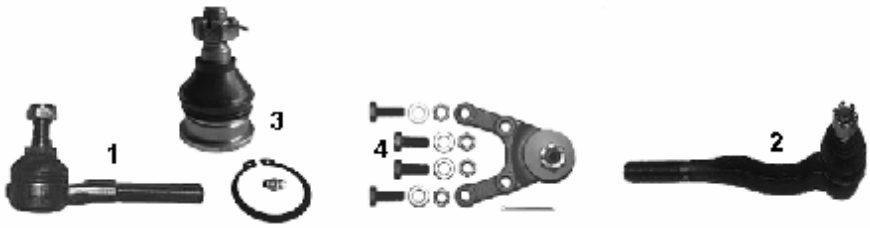


| NR | MAPCO | REF | | | ← | → | ↑ | ↓ | | | NEW | INFO |
|---|---|---|---|---|---|---|---|---|---|---|---|---|
| 1 | 19546 | MB 315775 | ✓ | | ✓ | ✓ | | | ✓ | ✓ | | M16x1,5 LHT aussen/outside |
| 2 | 19545 | MB 315776 | ✓ | | ✓ | ✓ | | | ✓ | ✓ | | M16x1,5 RHT innen/inner |
| 3 | 19551 | MB 176309 | ✓ | | ✓ | ✓ | ✓ | | ✓ | ✓ | | |
| 4 | 19552 | MB 176308 | ✓ | | ✓ | | | ✓ | ✓ | ✓ | | |

## MITSUBISHI PAJERO II - MONTERO 1990 → 04/00

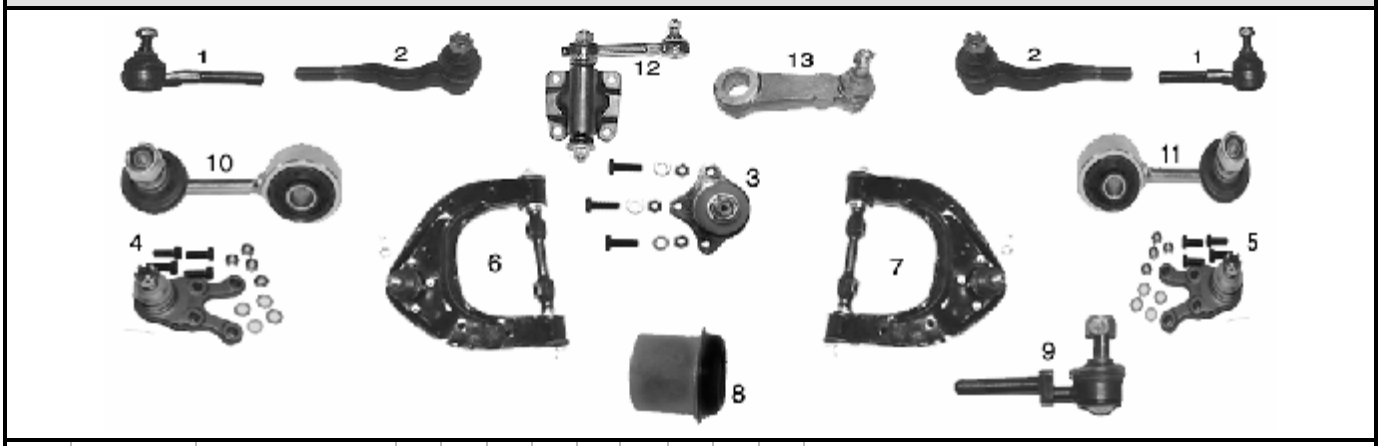


| NR | MAPCO | REF | | | ← | → | ↑ | ↓ | | | NEW | INFO |
|---|---|---|---|---|---|---|---|---|---|---|---|---|
| 1 | 19549 | MB 831043 | ✓ | | ✓ | ✓ | | | ✓ | ✓ | | aussen/outside |
| 2 | 19548 | MB 831044 | ✓ | | ✓ | ✓ | | | ✓ | ✓ | | innen/inner |
| 3 | 19553 | MB 860829 | ✓ | | ✓ | ✓ | ✓ | | ✓ | ✓ | | |
| 4 | 19554 | MB 831037 | ✓ | | ✓ | | | ✓ | ✓ | ✓ | | |
| 5 | 19555 | MB 831038 | ✓ | | | ✓ | | ✓ | ✓ | ✓ | | |
| 6 | 49546 | MR 296093 | ✓ | | ✓ | | ✓ | | ✓ | ✓ | | 1992→ 04/00 |
| 7 | 49547 | MR 296094 | ✓ | | | ✓ | ✓ | | ✓ | ✓ | | 1992→ 04/00 |
| 8 | 33553 | MB 633820 | ✓ | | ✓ | ✓ | | ✓ | ✓ | ✓ | | |
| 9 | 49240 | MB 584021 | | ✓ | ✓ | ✓ | ✓ | | ✓ | ✓ | | |
| 10 | 59546 | MR 267876 | ✓ | | ✓ | | | | ✓ | ✓ | | |
| 11 | 59547 | MR 267877 | ✓ | | | ✓ | | | ✓ | ✓ | | |
| 12 | 59305 | MB 831042 | ✓ | | ✓ | ✓ | | | ✓ | ✓ | | RHD |
| 13 | 59340 | MB 831040 | ✓ | | ✓ | ✓ | | | ✓ | ✓ | | RHD |

## MITSUBISHI SPACE GEAR 05/95 →

| NR | MAPCO | REF | | | ← | → | ↑ | ↓ | | | NEW | INFO |
|---|---|---|---|---|---|---|---|---|---|---|---|---|
| 1 | 59544 | MR 267873 | ✓ | | ✓ | ✓ | | | ✓ | ✓ | | |
| 2 | 59545 | MR 267875 | | ✓ | ✓ | ✓ | | | ✓ | ✓ | | |

## MITSUBISHI SPACE RUNNER (N50) 10/91 → 08/99

| NR | MAPCO | REF | | | ← | → | ↑ | ↓ | | | NEW | INFO |
|---|---|---|---|---|---|---|---|---|---|---|---|---|
| 1 | 49578 | MB 241833 | ✓ | | ✓ | ✓ | | | ✓ | ✓ | | |
| 2 | 49256 | MB 192430 | ✓ | | ✓ | ✓ | | | ✓ | ✓ | | |
| 3 | 59537HPS | MR 316435 | ✓ | | ✓ | | | | ✓ | ✓ | ✓ | 2.0+2.4 GDI |
| 4 | 59538HPS | MR 316436 | ✓ | | | ✓ | | | ✓ | ✓ | ✓ | 2.0+2.4 GDI |

## MITSUBISHI SPACE STAR 06/98 →

| NR | MAPCO | REF | | | ← | → | ↑ | ↓ | | | NEW | INFO |
|---|---|---|---|---|---|---|---|---|---|---|---|---|
| 1 | 49578 | MB 241833 | ✓ | | ✓ | ✓ | | | ✓ | ✓ | | |
| 2 | 49256 | MB 192430 | ✓ | | ✓ | ✓ | | | ✓ | ✓ | | |
| 3 | 51550 | MB 809222 | | ✓ | ✓ | | | | ✓ | ✓ | | |
| 4 | 51551 | MB 809223 | | ✓ | | ✓ | | | ✓ | ✓ | | |

## MITSUBISHI SPACE WAGON (N3_W, N4_W) 10/91 → 10/98

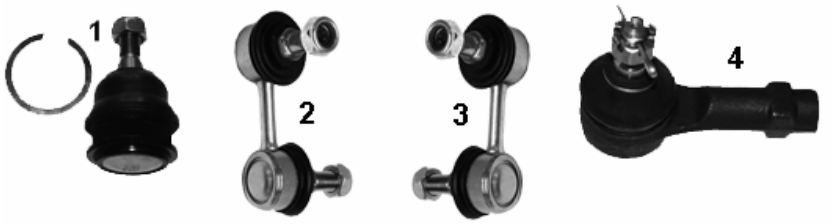


| NR | MAPCO | REF | | | ← | → | ↑ | ↓ | | | NEW | INFO |
|---|---|---|---|---|---|---|---|---|---|---|---|---|
| 1 | 49578 | MB 241833 | ✓ | | ✓ | ✓ | | | ✓ | ✓ | | |
| 2 | 59510 | MB 672370 | ✓ | | ✓ | | | | ✓ | ✓ | | |
| 3 | 59511 | MB 808076 | ✓ | | | ✓ | | | ✓ | ✓ | | |
| 4 | 49256 | MB 192430 | ✓ | | ✓ | ✓ | | | ✓ | ✓ | | |
| | | | | | | | | | | | | |

## MITSUBISHI SPACE WAGON (N5_W) 10/98 →

| NR | MAPCO | REF | | | ← | → | ↑ | ↓ | | | NEW | INFO |
|---|---|---|---|---|---|---|---|---|---|---|---|---|
| 1 | 59537HPS | MR 316435 | ✓ | | ✓ | | | | ✓ | ✓ | | |
| 2 | 59538HPS | MR 316436 | ✓ | | | ✓ | | | ✓ | ✓ | | |
| | | | | | | | | | | | | |

# NISSAN

## NISSAN ALMERA N15 1995→07/00

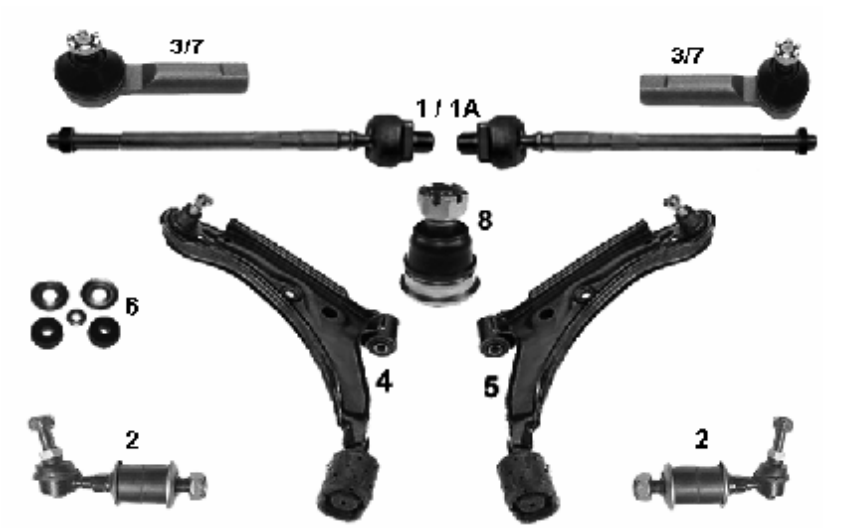


| NR | MAPCO | REF | | | ← | → | ↑ | ↓ | | | NEW | INFO |
|---|---|---|---|---|---|---|---|---|---|---|---|---|
| 1 | 59253 | 48521-1M210 | ✓ | | ✓ | ✓ | | | | ✓ | | M12x1,25RHT |
| 1A | 59360 | 48521-1M226 | ✓ | | ✓ | ✓ | | | ✓ | | | M12x1,25RHT |
| 2 | 49525 | 54618-50Y00 | ✓ | | | ✓ | | | ✓ | ✓ | | |
| 3 | 19528 | 48520-0M025 | ✓ | | ✓ | ✓ | | | ✓ | ✓ | | ✓ 1.4-1.6 |
| 4 | 49528 | 54501-0M060 | ✓ | | ✓ | | | | ✓ | ✓ | | |
| 5 | 49529 | 54500-0M060 | ✓ | | | ✓ | | | ✓ | ✓ | | |
| 6 | 33529 | | ✓ | | ✓ | ✓ | | | ✓ | ✓ | | 49525 |
| 7 | 59524 | 48520-0M085 | ✓ | | ✓ | ✓ | | | ✓ | ✓ | | ✓ 2.0D + 2.0 Gti |
| 8 | 59522 | 40160-50Y00 | ✓ | | ✓ | ✓ | | ✓ | ✓ | ✓ | | |

## NISSAN ALMERA N16 2000→

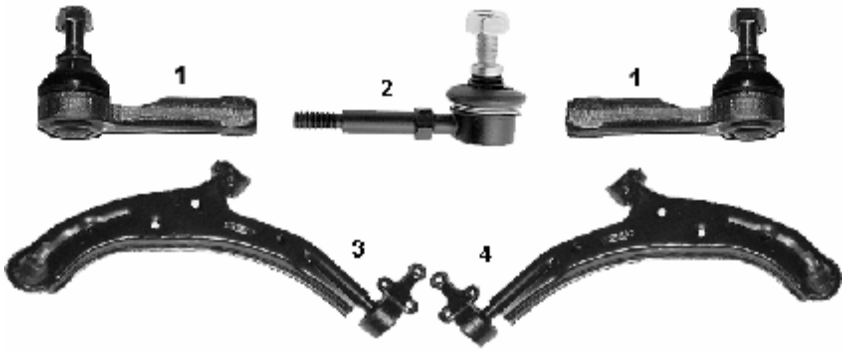


| NR | MAPCO | REF | | | ← | → | ↑ | ↓ | | | NEW | INFO |
|---|---|---|---|---|---|---|---|---|---|---|---|---|
| 1 | 59225 | 48520-BM425 | ✓ | | ✓ | ✓ | | | ✓ | ✓ | | M12x1,25 |
| 2 | 59226 | 54618-4M400 | ✓ | | ✓ | ✓ | | | ✓ | ✓ | | |
| 3 | 51527 | 54501-4M400 | ✓ | | ✓ | | | ✓ | ✓ | ✓ | ✓ | |
| 4 | 51528 | 54500-4M410 | ✓ | | | ✓ | | ✓ | ✓ | ✓ | ✓ | |

## NISSAN BLUEBIRD 11/83→12/90

| NR | MAPCO | REF | | | ← | → | ↑ | ↓ | | | NEW | INFO |
|---|---|---|---|---|---|---|---|---|---|---|---|---|
| 1 | 59255 | 48520-50A26 | ✓ | | ✓ | ✓ | | | ✓ | ✓ | | M12x1,25RHT 1 |

## NISSAN CHERRY 11/83→12/90

| NR | MAPCO | REF | | | ← | → | ↑ | ↓ | | | NEW | INFO |
|---|---|---|---|---|---|---|---|---|---|---|---|---|
| 1 | 59325 | 40160-01A25 | ✓ | | ✓ | ✓ | | | ✓ | ✓ | | 13 mm 1 |

## NISSAN INTERSTAR 07/02 →

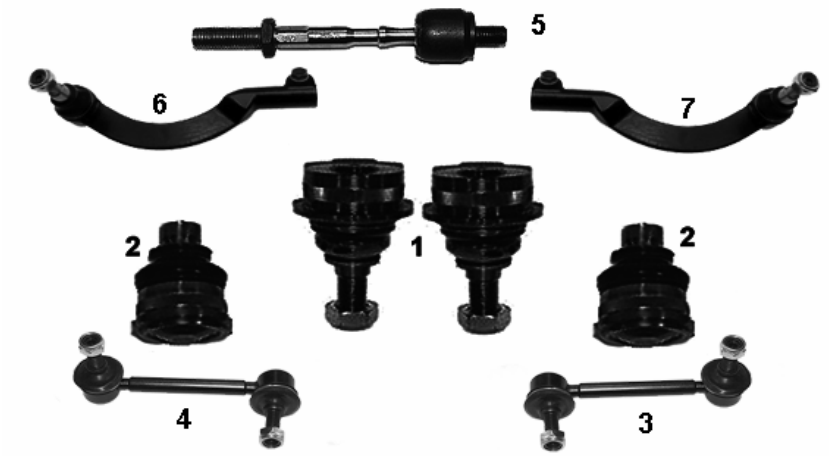


| NR | MAPCO | REF | | | ← | → | ↑ | ↓ | | | NEW | INFO |
|---|---|---|---|---|---|---|---|---|---|---|---|---|
| 1 | 49110 | 7700 312 851 | ✓ | | ✓ | ✓ | ✓ | | ✓ | ✓ | | |
| 2 | 49111 | 7700 312 852 | ✓ | | ✓ | ✓ | | ✓ | ✓ | ✓ | | |
| 3 | 49108HPS | 54618-00QAA | ✓ | | | ✓ | | | ✓ | ✓ | | |
| 4 | 49109HPS | 54618-00QAB | ✓ | | ✓ | | | | ✓ | ✓ | | |
| 5 | 49125 | 48521-00QAF | ✓ | | ✓ | ✓ | | | | ✓ | | |
| 6 | 49137 | 48520-00QAH | ✓ | | ✓ | | | | ✓ | ✓ | | (M16x1,5RHT) L= 225mm |
| 7 | 49138 | 48520-00QAJ | ✓ | | | ✓ | | | ✓ | ✓ | | (M16x1,5RHT) L= 225mm |

## NISSAN KUBISTAR 08/03 →

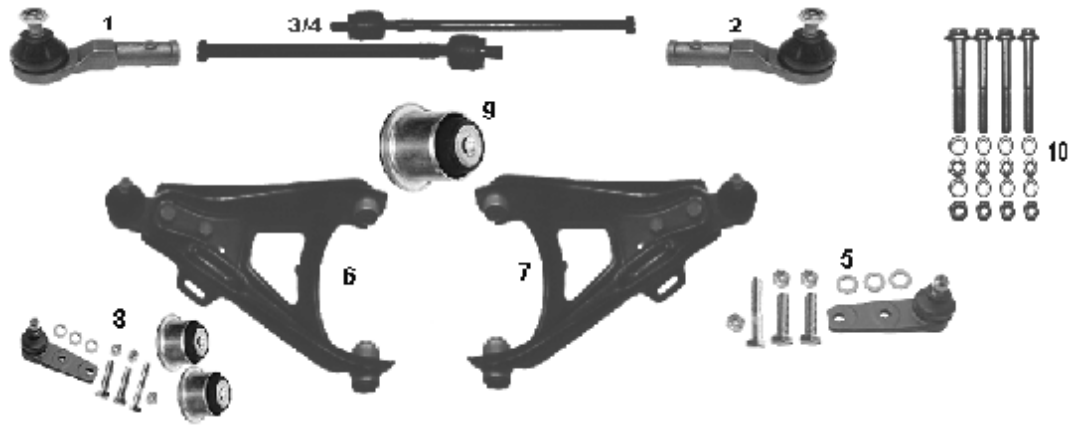


| NR | MAPCO | REF | | | ← | → | ↑ | ↓ | | | NEW | INFO |
|---|---|---|---|---|---|---|---|---|---|---|---|---|
| 1 | **49135** | 48520-00QAN | ✓ | | ✓ | | | | ✓ | ✓ | | 12,20mm M14x1,5RHT |
| 2 | **49136** | 48520-00QAP | ✓ | | | ✓ | | | ✓ | ✓ | | 12,20mm M14x1,5RHT |
| 3 | **49117/1** | 48521-00QAG | ✓ | | ✓ | ✓ | | | ✓ | ✓ | | außen M 12x1,5 (**SMI**) **L=300mm** |
| 4 | **19195** | 7701472113 | ✓ | | ✓ | ✓ | | | | ✓ | | **L= 235mm** |
| 5 | **19109** | 7701468883 | ✓ | | ✓ | ✓ | | | ✓ | ✓ | | |
| 6 | **19196** | 7700425227 | ✓ | | ✓ | | | | ✓ | ✓ | | |
| 7 | **19197** | 7700425228 | ✓ | | | ✓ | | | ✓ | ✓ | | |
| 8 | **19208** | | ✓ | | ✓ | ✓ | | | ✓ | ✓ | | Kit |
| 9 | **33165** | 7700419249 | ✓ | | ✓ | ✓ | | | ✓ | ✓ | | |
| 10 | **95137** | | ✓ | | ✓ | ✓ | | | ✓ | ✓ | | MS |

## NISSAN MAXIMA J30 1988→1994
## NISSAN MAXIMA A32 1994→2000

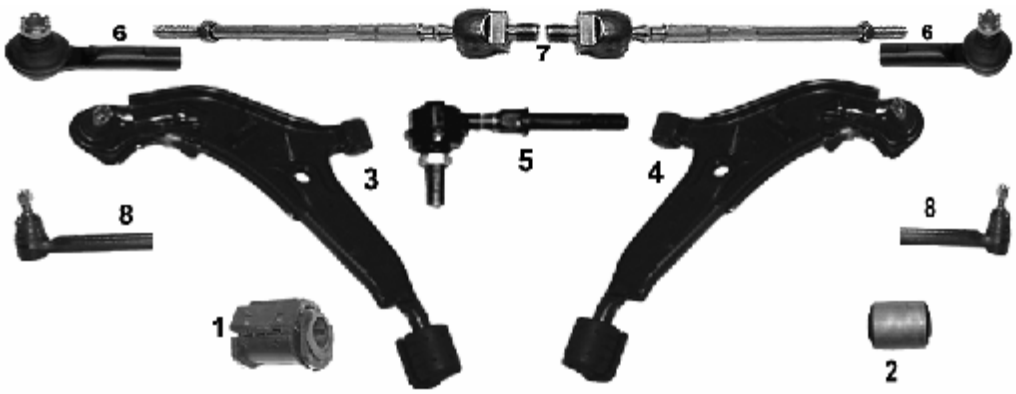


| NR | MAPCO | REF | | | ← | → | ↑ | ↓ | | | NEW | INFO |
|---|---|---|---|---|---|---|---|---|---|---|---|---|
| 1 | **33506** | 54570-50Y11 | ✓ | | ✓ | ✓ | | | ✓ | ✓ | | |
| 2 | **33511** | 54590-01E00 | ✓ | | ✓ | ✓ | | | ✓ | ✓ | ✓ | |
| 3 | **49220** | 54501-41U01 | ✓ | | ✓ | | | | ✓ | ✓ | | |
| 4 | **49221** | 54500-39U01 | ✓ | | | ✓ | | | ✓ | ✓ | | |
| 5 | **49222** | 54618-0E000 | ✓ | | ✓ | ✓ | | | ✓ | ✓ | | |
| 6 | **59524** | 48520-0M085 | ✓ | | ✓ | ✓ | | | ✓ | ✓ | | ✓ 2.0 |
| 7 | **59525** | 48521-0C025 | ✓ | | ✓ | ✓ | | | ✓ | ✓ | | |
| 8 | **59256** | 48520-88E26 | ✓ | | ✓ | ✓ | | | ✓ | ✓ | | ✓ 3.0 145mm M12x1,25 RHT |
| | | | | | | | | | | | | |

## NISSAN MAXIMA J30 — 03/00→

| NR | MAPCO | REF | | | ← | → | ↑ | ↓ | | | NEW | INFO |
|---|---|---|---|---|---|---|---|---|---|---|---|---|
| 1 | 19538 | 54668-2Y000 | ✓ | | ✓ | | | | ✓ | ✓ | ✓ | M10x1,25 L=90mm |
| 2 | 19539 | 54618-2Y000 | ✓ | | | ✓ | | | ✓ | ✓ | ✓ | M10x1,25 L=90mm |
| | | | | | | | | | | | | |

## NISSAN MICRA K 10 — 1983 → 1992

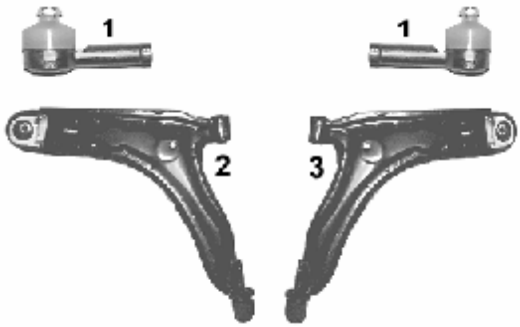


| NR | MAPCO | REF | | | ← | → | ↑ | ↓ | | | NEW | INFO |
|---|---|---|---|---|---|---|---|---|---|---|---|---|
| 1 | 19556 | 48520-17B25 | ✓ | | ✓ | ✓ | | | ✓ | ✓ | | M12x1,25RHT |
| 2 | 49538 | 54501-21B00 | ✓ | | ✓ | | | | ✓ | ✓ | | |
| 3 | 49539 | 54500-21B00 | ✓ | | | ✓ | | | ✓ | ✓ | | |

## NISSAN MICRA K 11 — 01/92→09/00

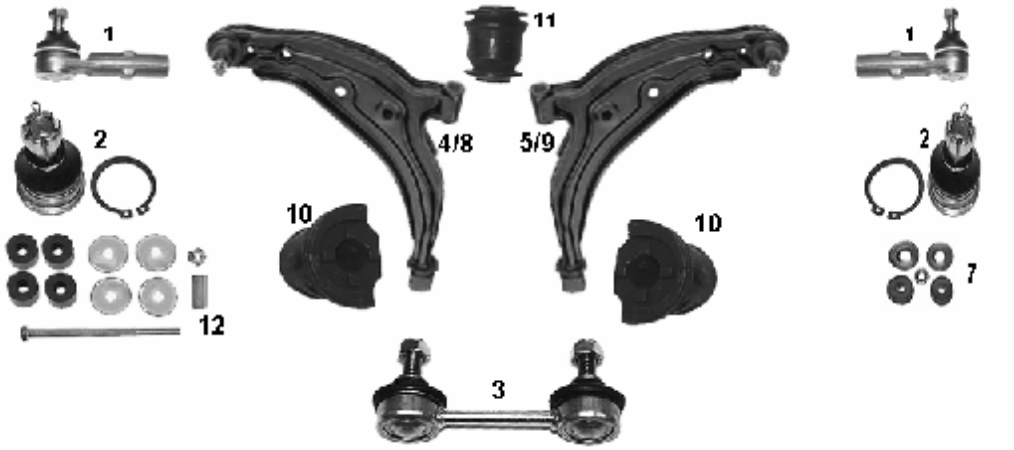


| NR | MAPCO | REF | | | ← | → | ↑ | ↓ | | | NEW | INFO |
|---|---|---|---|---|---|---|---|---|---|---|---|---|
| 1 | 19525 | 48520 -4F125 | ✓ | | ✓ | ✓ | | | ✓ | ✓ | | M12x1,25RHT |
| 2 | 19526 | 40160 -4F100 | ✓ | | ✓ | ✓ | | | ✓ | ✓ | | |
| 3 | 19527 | 56261 -4F702 | | ✓ | ✓ | ✓ | | | ✓ | ✓ | | |
| 4 | 49520 | 54501 -4F105 | ✓ | | ✓ | | | | ✓ | ✓ | | 01/92 → 02/98 |
| 5 | 49521 | 54500 -4F105 | ✓ | | | ✓ | | | ✓ | ✓ | | 01/92 → 02/98 |
| 7 | 33529 | | ✓ | | ✓ | ✓ | | | ✓ | ✓ | | |
| 8 | 49536 | 54501 -6F600 | ✓ | | ✓ | | | | ✓ | ✓ | | 02/98→09/00 |
| 9 | 49537 | 54500 -6F600 | ✓ | | | ✓ | | | ✓ | ✓ | | 02/98→09/00 |
| 10 | 33501 | 54476 -41B02 | ✓ | | ✓ | ✓ | | | ✓ | ✓ | | |
| 11 | 33502 | 54560 -17B01 | ✓ | | ✓ | ✓ | | | ✓ | ✓ | | |
| 12 | 49228 | 54618 -47B00 | ✓ | | ✓ | ✓ | | | ✓ | ✓ | ✓ | |

## NISSAN MICRA K 12 — 01/03 →

| NR | MAPCO | REF | | | ← | → | ↑ | ↓ | | | NEW | INFO |
|---|---|---|---|---|---|---|---|---|---|---|---|---|
| 1 | 59358 | 54501-AX600 | ✓ | | ✓ | | | | ✓ | ✓ | | |
| 2 | 59359 | 54500-AX600 | ✓ | | | ✓ | | | ✓ | ✓ | | |
| 3 | 49151 | 8200 298 455 part of | ✓ | | ✓ | ✓ | | | ✓ | ✓ | | ø = 18mm |
| 4 | 19120HPS | 54618-AX600 | ✓ | | ✓ | ✓ | | | ✓ | ✓ | ✓ | M10x1,25 L=248,0mm |

## NISSAN NOTE — 03/06 →

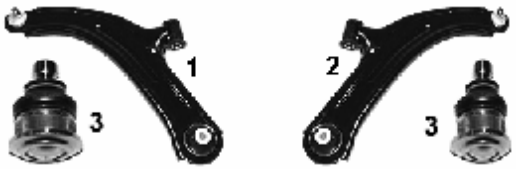


| NR | MAPCO | REF | | | ← | → | ↑ | ↓ | | | NEW | INFO |
|---|---|---|---|---|---|---|---|---|---|---|---|---|
| 1 | 59358 | 54501-AX600 | ✓ | | ✓ | | | | ✓ | ✓ | | |
| 2 | 59359 | 54500-AX600 | ✓ | | | ✓ | | | ✓ | ✓ | | |
| 3 | 49151 | 8200 298 455 part of | ✓ | | ✓ | ✓ | | | ✓ | ✓ | | ø = 18mm |

## NISSAN PATHFINDER (R50) — 09/97→

| NR | MAPCO | REF | | | ← | → | ↑ | ↓ | | | NEW | INFO |
|---|---|---|---|---|---|---|---|---|---|---|---|---|
| 1 | 49224HPS | 54618-0W001 | ✓ | | ✓ | ✓ | | | ✓ | ✓ | | |
| 2 | 49223HPS | 56260-41G11 | | ✓ | ✓ | ✓ | | | ✓ | ✓ | | |

## NISSAN PATROL GR II (Y61) — 06/97→

| NR | MAPCO | REF | | | ← | → | ↑ | ↓ | | | NEW | INFO |
|---|---|---|---|---|---|---|---|---|---|---|---|---|
| 1 | 49229 | 54618-VB000 | ✓ | | ✓ | ✓ | | | ✓ | ✓ | ✓ | |
| 2 | 51522 | 56620-VB010 | | ✓ | ✓ | ✓ | | | ✓ | ✓ | ✓ | |

## NISSAN PICKUP (720) — 1983→1986

| NR | MAPCO | REF | | | ← | → | ↑ | ↓ | | | NEW | INFO |
|---|---|---|---|---|---|---|---|---|---|---|---|---|
| 1 | 59259 | 48521-01W00 | ✓ | | ✓ | ✓ | | | ✓ | ✓ | | innen/inner M18x1,5 RHT 1 |

## NISSAN PICKUP (4WD, D21) 1986→1992

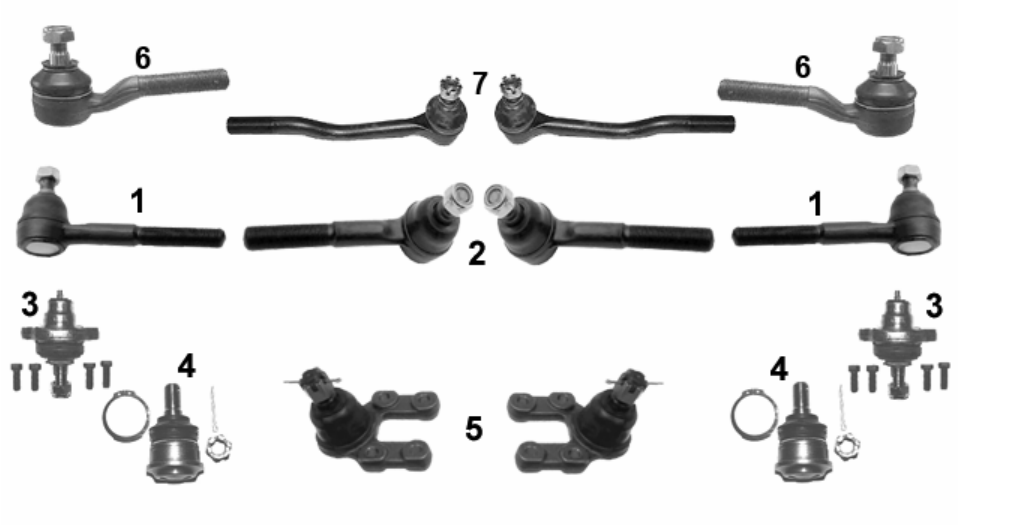


| NR | MAPCO | REF | | | ← | → | ↑ | ↓ | | | NEW | INFO |
|---|---|---|---|---|---|---|---|---|---|---|---|---|
| 1 | 19533 | 48570-31G25 | ✓ | | ✓ | ✓ | | | ✓ | ✓ | | außen/outside M16x1.5 LHT |
| 2 | 19534 | 48520-31G25 | ✓ | | ✓ | ✓ | | | ✓ | ✓ | | innen/inner M16x1.5 RHT |
| 3 | 19535 | 40110-01G25 | ✓ | | ✓ | ✓ | | | ✓ | ✓ | | |
| 4 | 19536 | 40160-01G50 | ✓ | | ✓ | ✓ | | | ✓ | ✓ | | |
| 5 | 59520 | 40160-50W25 | ✓ | | ✓ | ✓ | | | ✓ | ✓ | | |
| 6 | 59254 | 48520-41W00 | ✓ | | ✓ | ✓ | | | ✓ | ✓ | | außen/outside M18x1,5 LHT |
| 7 | 59258 | 48521-01G25 | ✓ | | ✓ | ✓ | | | ✓ | ✓ | | innen/inner M18x1,5 RHT |

## NISSAN PRAIRE (M10, NM10) 01/83→10/88

| NR | MAPCO | REF | | | ← | → | ↑ | ↓ | | | NEW | INFO |
|---|---|---|---|---|---|---|---|---|---|---|---|---|
| 1 | 59325 | 40160-01A25 | ✓ | | ✓ | ✓ | | | ✓ | ✓ | | 13 mm 1 |

## NISSAN PRIMASTAR 03/01→

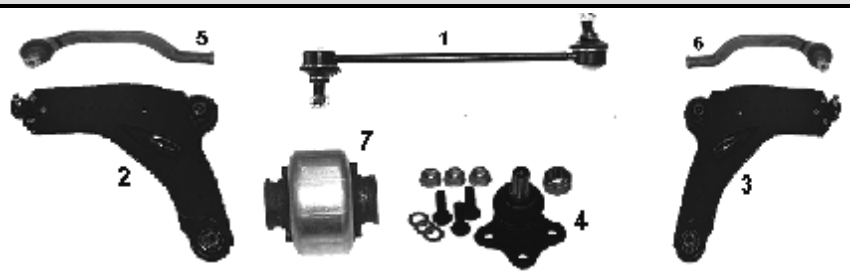


| NR | MAPCO | REF | | | ← | → | ↑ | ↓ | | | NEW | INFO |
|---|---|---|---|---|---|---|---|---|---|---|---|---|
| 1 | 49118HPS | 54616-00QAA | ✓ | | ✓ | ✓ | | | ✓ | ✓ | | |
| 2 | 49141 | 54503-00QAA | ✓ | | ✓ | | | ✓ | ✓ | ✓ | | |
| 3 | 49142 | 54502-00QAA | ✓ | | | ✓ | | ✓ | ✓ | ✓ | | |
| 4 | 49140 | 54502-00QAA | ✓ | | ✓ | ✓ | | ✓ | ✓ | ✓ | | |
| 5 | 49143 | 48520-00QAK | ✓ | | ✓ | | | | ✓ | ✓ | | |
| 6 | 49144 | 48520-00QAL | ✓ | | | ✓ | | | ✓ | ✓ | | |
| 7 | 33122 | 4408 958 | ✓ | | ✓ | ✓ | | | ✓ | ✓ | ✓ | |

## NISSAN PRIMERA P10 – W10 1990→ 06/96

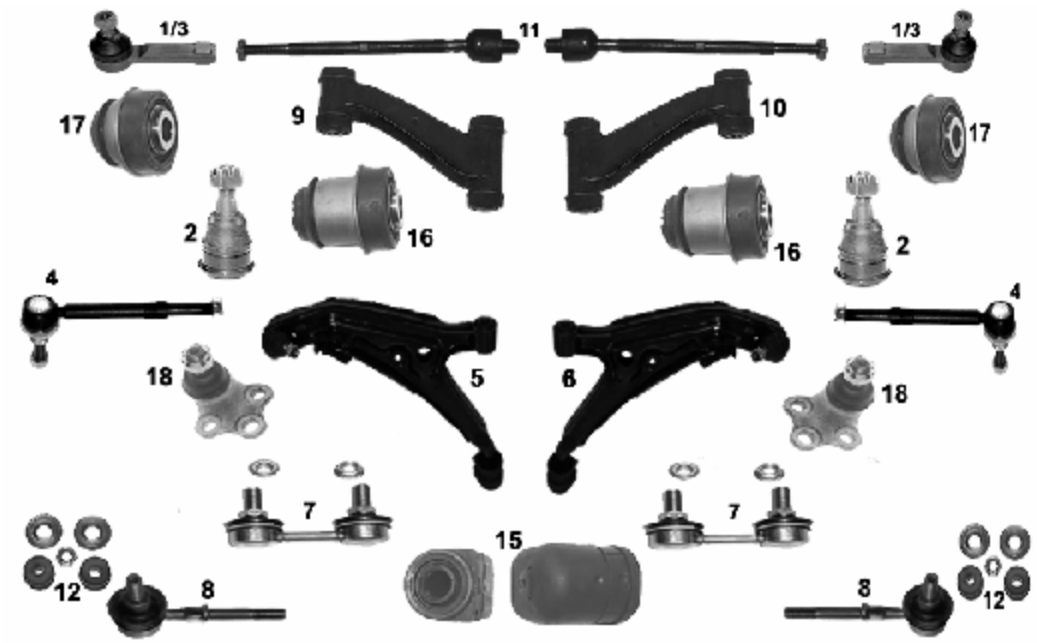


| NR | MAPCO | REF | | | ← | → | ↑ | ↓ | | | NEW | INFO |
|---|---|---|---|---|---|---|---|---|---|---|---|---|
| 1 | 19523 | 48520-73J35 | ✓ | | ✓ | ✓ | | | ✓ | ✓ | | ✓P10 , M12x1,25RHT |
| 2 | 19524 | 40160-70J00 | ✓ | | ✓ | ✓ | | | ✓ | ✓ | | W10 |
| 3 | 59257 | 48520-D0126 | ✓ | | ✓ | ✓ | | | ✓ | ✓ | | ✓W10 , 13mm, M12x1,25 RHT |
| 4 | 19529 | 54618-86J25 | ✓ | | ✓ | ✓ | | | ✓ | ✓ | | ✓ 2.0 |
| 5 | 49522 | 54501-86J00 | ✓ | | ✓ | | | | ✓ | ✓ | | ✓P10 |
| 6 | 49523 | 54500-86J00 | ✓ | | | ✓ | | | ✓ | ✓ | | ✓P10 |
| 7 | 49524 | 56261-86J25 | | ✓ | ✓ | ✓ | | | ✓ | ✓ | | ✓1.6 |
| 8 | 49525 | 54618-50Y00 | ✓ | | ✓ | ✓ | | | ✓ | ✓ | | ✓1.6 |
| 9 | 49526 | 54525-2F010 | ✓ | | ✓ | | ✓ | | ✓ | ✓ | | |
| 10 | 49527 | 54524-2F010 | ✓ | | | ✓ | ✓ | | ✓ | ✓ | | |
| 11 | 19530 | 48521-72E06 | ✓ | | ✓ | ✓ | | | ✓ | ✓ | | |
| 12 | 33529 | | ✓ | | ✓ | ✓ | | | ✓ | ✓ | | 49525 |
| 15 | 33503 | 54570-50J00 | ✓ | | ✓ | ✓ | | ✓ | ✓ | ✓ | | |
| 16 | 33504 | 54541-90J02 | ✓ | | ✓ | ✓ | ✓ | | ✓ | ✓ | | |
| 17 | 33505 | 54545-90J00 | ✓ | | ✓ | ✓ | ✓ | | ✓ | ✓ | | |
| 18 | 59521 | 40160-01E00 | ✓ | | ✓ | ✓ | | | ✓ | ✓ | | ✓W10 |

## NISSAN PRIMERA P11 09/96→

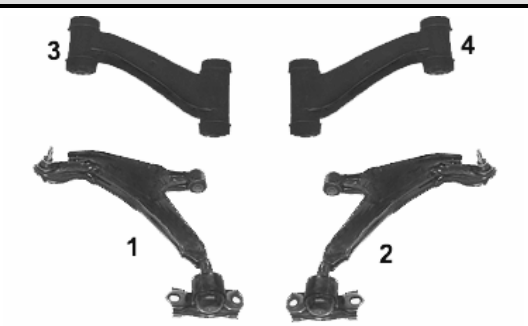


| NR | MAPCO | REF | | | ← | → | ↑ | ↓ | | | NEW | INFO |
|---|---|---|---|---|---|---|---|---|---|---|---|---|
| 1 | 49534 | 54501-2F500 | ✓ | | ✓ | ✓ | | ✓ | ✓ | ✓ | | |
| 2 | 49535 | 54500-2F500 | ✓ | | ✓ | ✓ | | ✓ | ✓ | ✓ | | |
| 3 | 49526 | 54525-2F010 | ✓ | | ✓ | | ✓ | | ✓ | ✓ | | |
| 4 | 49527 | 54524-2F010 | ✓ | | | ✓ | ✓ | | ✓ | ✓ | | |

## NISSAN PRIMERA P12 03/02→

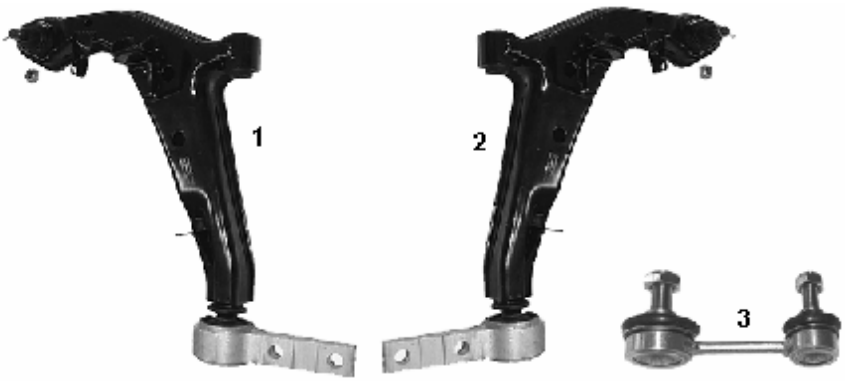


| NR | MAPCO | REF | | | ← | → | ↑ | ↓ | | | NEW | INFO |
|---|---|---|---|---|---|---|---|---|---|---|---|---|
| 1 | 51529 | 54501-AV606 | ✓ | | ✓ | | | ✓ | ✓ | ✓ | ✓ | |
| 2 | 51530 | 54500 AV600 | ✓ | | | ✓ | | ✓ | ✓ | ✓ | ✓ | |
| 3 | 51525 | 56261-0E000 | | ✓ | ✓ | ✓ | | | ✓ | ✓ | ✓ | |

## NISSAN SERENA 11/92→

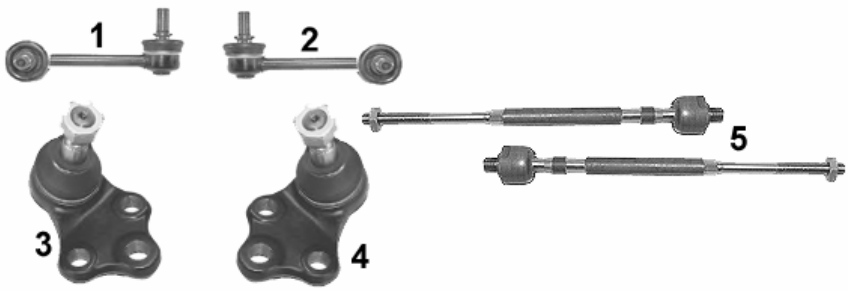


| NR | MAPCO | REF | | | ← | → | ↑ | ↓ | | | NEW | INFO |
|---|---|---|---|---|---|---|---|---|---|---|---|---|
| 1 | 59250 | 54618-9C000 | ✓ | | ✓ | | | | ✓ | ✓ | | |
| 2 | 59251 | 54618-9C002 | ✓ | | | ✓ | | | ✓ | ✓ | | |
| 3 | 59598 | 40161-9C500 | ✓ | | ✓ | | | | ✓ | ✓ | | |
| 4 | 59599 | 40160-9C500 | ✓ | | | ✓ | | | ✓ | ✓ | | |
| 5 | 59593 | | ✓ | | ✓ | ✓ | | | ✓ | ✓ | | |

## NISSAN SUNNY I (B11) 03/82→08/90

| NR | MAPCO | REF | | | ← | → | ↑ | ↓ | | | NEW | INFO |
|---|---|---|---|---|---|---|---|---|---|---|---|---|
| 1 | 59325 | 40160-01A25 | ✓ | | ✓ | ✓ | | | ✓ | ✓ | | 13 mm |
| 2 | 59257 | 48520-D0126 | ✓ | | ✓ | ✓ | | | ✓ | ✓ | | M12x1,25 RHT |

## NISSAN SUNNY II (N13) 06/86→08/90

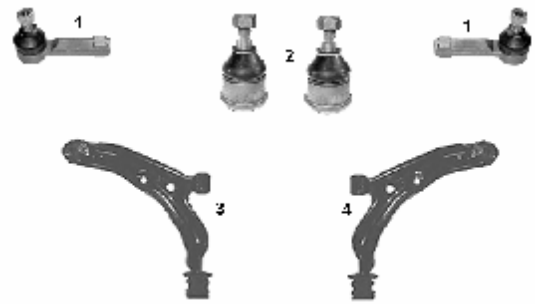


| NR | MAPCO | REF | | | ← | → | ↑ | ↓ | | | NEW | INFO |
|---|---|---|---|---|---|---|---|---|---|---|---|---|
| 1 | 59257 | 48520-D0126 | ✓ | | ✓ | ✓ | | | ✓ | ✓ | | M12x1,25 RHT |
| 2 | 59252 | 40160-50A00 | ✓ | | ✓ | ✓ | | ✓ | ✓ | ✓ | | |
| 3 | 59321 | 54501-50A00 | ✓ | | ✓ | | | ✓ | ✓ | ✓ | | |
| 4 | 59322 | 54500-50A00 | ✓ | | | ✓ | | ✓ | ✓ | ✓ | | |

## NISSAN SUNNY III (N14) + NX100 (B13) 1990→1996

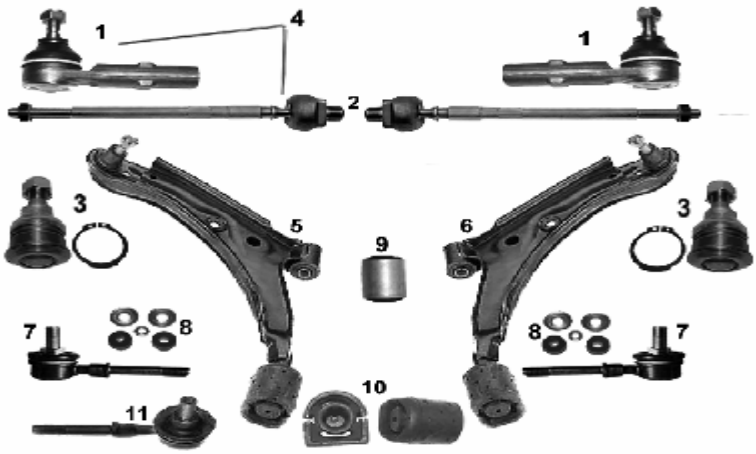


| NR | MAPCO | REF | | | ← | → | ↑ | ↓ | | | NEW | INFO |
|---|---|---|---|---|---|---|---|---|---|---|---|---|
| 1 | 19520 | 48520-50Y25 | ✓ | | ✓ | ✓ | | | ✓ | ✓ | | M12x1,25 RHT |
| 2 | 19521 | 48521-50Y00 | ✓ | | ✓ | ✓ | | ✓ | ✓ | ✓ | | |
| 3 | 19522 | 40160-52Y00 | ✓ | | ✓ | ✓ | | ✓ | ✓ | ✓ | | |
| 4 | 49532 | 48510-50Y25 | ✓ | | ✓ | ✓ | | ✓ | ✓ | ✓ | | 1 + 2 |
| 5 | 49530 | 54501-52Y70 | ✓ | | ✓ | | | | ✓ | ✓ | | |
| 6 | 49531 | 54500-52Y70 | ✓ | | | ✓ | | | ✓ | ✓ | | |
| 7 | 49525 | 54618-50Y00 | ✓ | | ✓ | ✓ | | | ✓ | ✓ | | |
| 8 | 33529 | | ✓ | | ✓ | ✓ | | | ✓ | ✓ | | 49525 |
| 9 | 33507 | 54560-50A00 | ✓ | | ✓ | ✓ | | ✓ | ✓ | ✓ | | |
| 10 | 33500 | 54570-50Y11 | ✓ | | ✓ | ✓ | | ✓ | ✓ | ✓ | | |
| 11 | 59851 | 54618-54Y10 | | ✓ | ✓ | ✓ | | | ✓ | ✓ | | |

## NISSAN SUNNY Kasten (Y10) 11/90→

| NR | MAPCO | REF | | | ← | → | ↑ | ↓ | | | NEW | INFO |
|---|---|---|---|---|---|---|---|---|---|---|---|---|
| 1 | 59257 | 48520-D0126 | ✓ | | ✓ | ✓ | | | ✓ | ✓ | | M12x1,25 RHT 1 |

## NISSAN TERRANO I (WD21) 10/87→1993

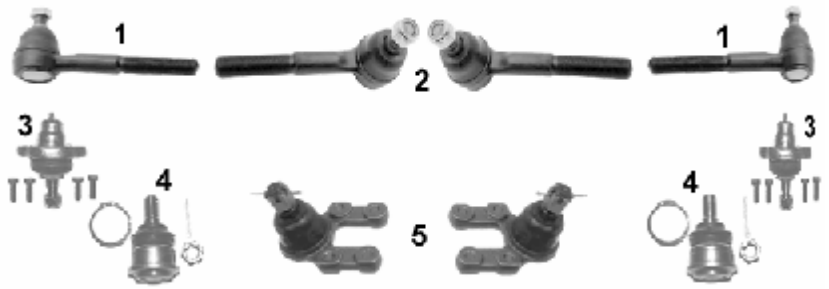


| NR | MAPCO | REF | | | ← | → | ↑ | ↓ | | | NEW | INFO |
|---|---|---|---|---|---|---|---|---|---|---|---|---|
| 1 | 59526 | 48520-61G25 | ✓ | | ✓ | ✓ | | | ✓ | ✓ | | aussen/outside |
| 2 | 59528 | 48570-61G25 | ✓ | | ✓ | ✓ | | | ✓ | ✓ | | innen/inner |
| 3 | 19535 | 40110-01G25 | ✓ | | ✓ | ✓ | | | ✓ | ✓ | | |
| 4 | 19536 | 40160-01G50 | ✓ | | ✓ | ✓ | ✓ | | ✓ | ✓ | | |
| 5 | 59520 | 40160-50W25 | ✓ | | ✓ | ✓ | | ✓ | ✓ | ✓ | | |

## NISSAN TERRANO II (R20) 1993→

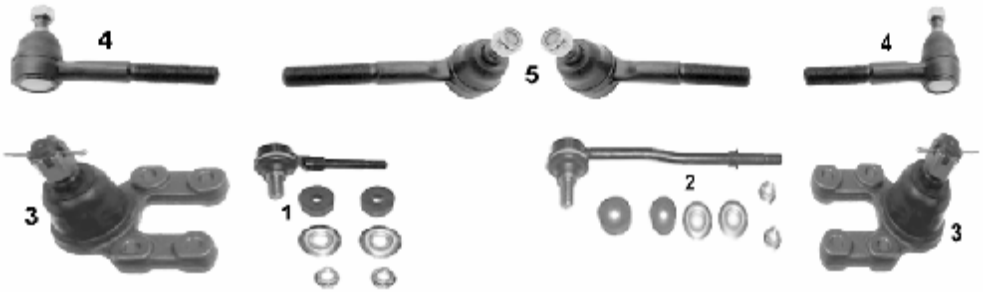


| NR | MAPCO | REF | | | ← | → | ↑ | ↓ | | | NEW | INFO |
|---|---|---|---|---|---|---|---|---|---|---|---|---|
| 1 | 49226HPS | 54618-0F000 | ✓ | | ✓ | ✓ | | | ✓ | ✓ | | |
| 2 | 49227 | 56260-0F001 | | ✓ | ✓ | ✓ | | | ✓ | ✓ | | |
| 3 | 59520 | 40160-50W25 | ✓ | | ✓ | ✓ | | ✓ | ✓ | ✓ | | |
| 4 | 59526 | 48520-61G25 | ✓ | | ✓ | ✓ | | | ✓ | ✓ | | aussen/outside |
| 5 | 59528 | 48570-61G25 | ✓ | | ✓ | ✓ | | | ✓ | ✓ | | innen/inner |
| | | | | | | | | | | | | |
| | | | | | | | | | | | | |

## NISSAN URVAN (E24) 05/87→

| NR | MAPCO | REF | | | ← | → | ↑ | ↓ | | | NEW | INFO |
|---|---|---|---|---|---|---|---|---|---|---|---|---|
| 1 | 59227 | 48640-01N25 | ✓ | | ✓ | ✓ | | | ✓ | ✓ | | M16x1,5 LHT |
| 2 | 59228 | 48641-01N25 | | ✓ | ✓ | ✓ | | | ✓ | ✓ | | M16x1,5 RHT |

## NISSAN VANETTE CARGO C22 10/86→12/95

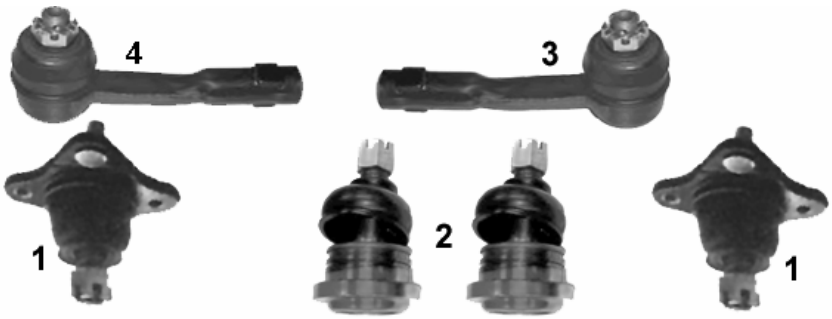


| NR | MAPCO | REF | | | ← | → | ↑ | ↓ | | | NEW | INFO |
|---|---|---|---|---|---|---|---|---|---|---|---|---|
| 1 | 19537 | 40110-G5100 | ✓ | | ✓ | ✓ | ✓ | | ✓ | ✓ | | |
| 2 | 59523 | 40160-G2525 | ✓ | | ✓ | ✓ | | ✓ | ✓ | ✓ | | |
| 3 | 59527 | 48521-G5125 | ✓ | | | ✓ | | | ✓ | ✓ | | |
| 4 | 59229 | 48641-G5125 | ✓ | | ✓ | | | | ✓ | ✓ | | |

## NISSAN VANETTE CARGO HC23 01/96→

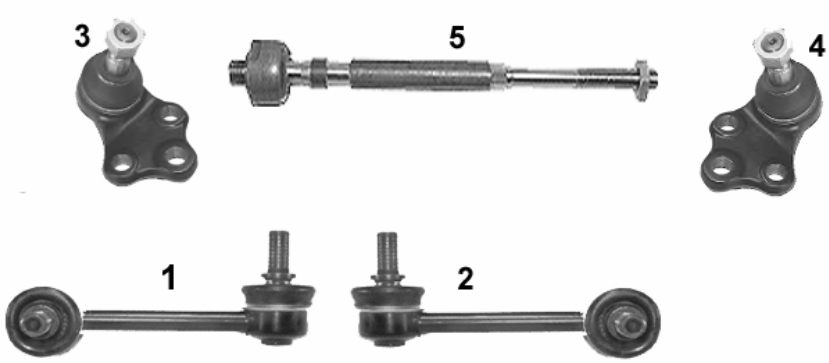


| NR | MAPCO | REF | | | ← | → | ↑ | ↓ | | | NEW | INFO |
|---|---|---|---|---|---|---|---|---|---|---|---|---|
| 1 | 59250 | 54618-9C000 | ✓ | | ✓ | | | | ✓ | ✓ | | |
| 2 | 59251 | 54618-9C002 | ✓ | | | ✓ | | | ✓ | ✓ | | |
| 3 | 59598 | 40161-9C500 | ✓ | | ✓ | | | | ✓ | ✓ | | |
| 4 | 59599 | 40160-9C500 | ✓ | | | ✓ | | | ✓ | ✓ | | |
| 5 | 59593 | | ✓ | | ✓ | ✓ | | | ✓ | ✓ | | |

## NISSAN NISSAN X-TRAIL (T30) 07/01→

| NR | MAPCO | REF | | | ← | → | ↑ | ↓ | | | NEW | INFO |
|---|---|---|---|---|---|---|---|---|---|---|---|---|
| 1 | 51520 | 54668-8H300 | ✓ | | ✓ | | | | ✓ | ✓ | | |
| 2 | 51521 | 54618-8H300 | ✓ | | | ✓ | | | ✓ | ✓ | | |

# OPEL - VAUXHALL

## OPEL AGILA 09/00→

| NR | MAPCO | REF | | | ← | → | ↑ | ↓ | | | NEW | INFO |
|---|---|---|---|---|---|---|---|---|---|---|---|---|
| 1 | 49611 | 4701744 | ✓ | | ✓ | ✓ | | | ✓ | ✓ | | M12x1,25RHT |
| 2 | 49602 | 4701745 | ✓ | | ✓ | ✓ | | | ✓ | ✓ | | M12x1,25RHT |

## OPEL ARENA 03/98→08/01

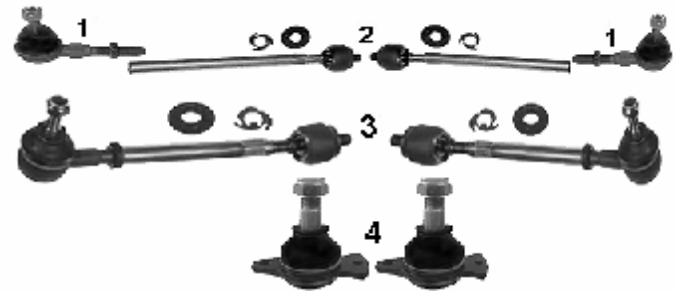


| NR | MAPCO | REF | | | ← | → | ↑ | ↓ | | | NEW | INFO |
|---|---|---|---|---|---|---|---|---|---|---|---|---|
| 1 | 19136 | 7701463035 | ✓ | | ✓ | ✓ | | | ✓ | ✓ | | |
| 2 | 19129/1 | 7701464313 | ✓ | | ✓ | ✓ | | | ✓ | ✓ | | |
| 3 | 19129 | 4403806 | ✓ | | ✓ | ✓ | | | ✓ | ✓ | | |
| 4 | 19135 | 4403641 | ✓ | | ✓ | ✓ | | | ✓ | ✓ | | |

## OPEL ASCONA B / VAUXHALL CAVALIER 09/75→ 08/81
## OPEL MANTA B 09/75→ 08/88

| NR | MAPCO | REF | | | ← | → | ↑ | ↓ | | | NEW | INFO |
|---|---|---|---|---|---|---|---|---|---|---|---|---|
| 1 | 19717 | 352819 | ✓ | | ✓ | ✓ | | ✓ | ✓ | ✓ | | 1 |

## OPEL ASCONA C 09/81→ 10/88
## VAUXHALL CAVALIER Mk II

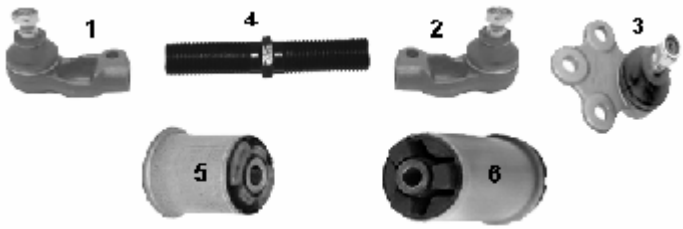


| NR | MAPCO | REF | | | ← | → | ↑ | ↓ | | | NEW | INFO |
|---|---|---|---|---|---|---|---|---|---|---|---|---|
| 1 | 19718 | 324039 | ✓ | | ✓ | | | | ✓ | ✓ | | M16x1,5RHT |
| 2 | 19719 | 324038 | ✓ | | | ✓ | | | ✓ | ✓ | | M16x1,5LHT |
| 3 | 19802 | 1603121 | ✓ | | ✓ | ✓ | | | ✓ | ✓ | | |
| 4 | 49604 | 322576 | ✓ | | ✓ | ✓ | | | ✓ | ✓ | | |
| 5 | 33785 | 402642 | | ✓ | ✓ | ✓ | | | ✓ | ✓ | | Ø 48,0mm |
| 6 | 33786 | 402645 | | ✓ | ✓ | ✓ | | | ✓ | ✓ | | Ø 59,0mm |

## OPEL ASTRA F
## VAUXHALL ASTRA Mk II + III

**1991→ 1998**

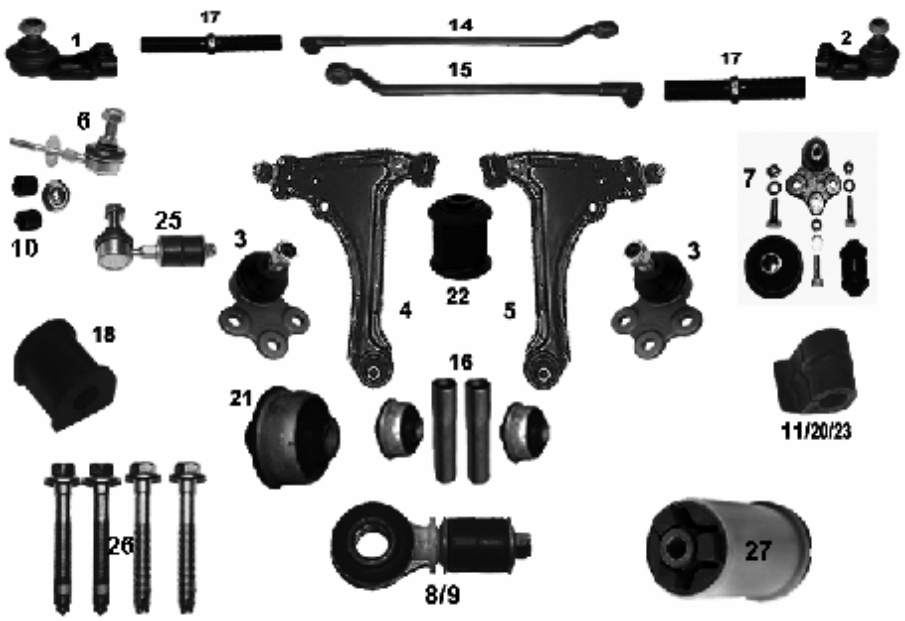


| NR | MAPCO | REF | | | ← | → | ↑ | ↓ | | | NEW | INFO |
|---|---|---|---|---|---|---|---|---|---|---|---|---|
| 1 | **19610** | 324055 | ✓ | | ✓ | | | | ✓ | ✓ | | M16x2,0 RHT |
| 2 | **19611** | 324056 | ✓ | | | ✓ | | | ✓ | ✓ | | M16x2,0 LHT |
| 3 | **19612** | 1603167 | ✓ | | ✓ | ✓ | | | ✓ | ✓ | | |
| 4 | **19619** | 352193 | ✓ | | ✓ | | | | ✓ | ✓ | | Chassis R2595226→ STOP 16V + 4x4 |
| 5 | **19620** | 352192 | ✓ | | | ✓ | | | ✓ | ✓ | | Chassis R2595226→ STOP 16V + 4x4 |
| 6 | **19607** | 350263 | ✓ | | ✓ | ✓ | | | ✓ | ✓ | | |
| 7 | **19270** | | ✓ | | ✓ | ✓ | | | ✓ | ✓ | | Kit |
| 8 | **33726** | 350260 | ✓ | | ✓ | ✓ | | | ✓ | ✓ | | Ø 22 mm |
| 9 | **33727** | 350261 | ✓ | | ✓ | ✓ | | | ✓ | ✓ | | Ø 18 mm |
| 10 | **33728** | | ✓ | | ✓ | ✓ | | | ✓ | ✓ | | **19607** |
| 11 | **33729** | 350078 | ✓ | | ✓ | ✓ | | | ✓ | ✓ | | Ø 22 mm |
| 12 | **49750** | | ✓ | | ✓ | | | | ✓ | ✓ | | **1 + 14 +17** |
| 13 | **49751** | | ✓ | | | ✓ | | | ✓ | ✓ | | **2 + 15 +17** |
| 14 | **49752** | 322147 | ✓ | | ✓ | | | | ✓ | ✓ | | |
| 15 | **49753** | 322146 | ✓ | | | ✓ | | | ✓ | ✓ | | |
| 16 | **33714/2** | | ✓ | | ✓ | ✓ | | | ✓ | ✓ | | Kit |
| 17 | **49604** | 322576 | ✓ | | ✓ | ✓ | | | ✓ | ✓ | | |
| 18 | **33739** | 444153 | | ✓ | ✓ | ✓ | | | ✓ | ✓ | | Ø 14mm |
| 20 | **33755** | 350081 | ✓ | | ✓ | ✓ | | | ✓ | ✓ | | Ø 18mm |
| 21 | **33714** | 352348 | ✓ | | ✓ | ✓ | | | ✓ | ✓ | | |
| 22 | **33725** | 352300 | ✓ | | ✓ | ✓ | | | ✓ | ✓ | | |
| 23 | **33760** | 350125 | ✓ | | ✓ | ✓ | | | ✓ | ✓ | | Ø 24 mm |
| 25 | **19607/8HPS** | 350263S1 | ✓ | | ✓ | ✓ | | | ✓ | ✓ | | |
| 26 | **95619** | | ✓ | | ✓ | ✓ | | | ✓ | ✓ | | MS |
| 27 | **33786** | 402645 | | ✓ | ✓ | ✓ | | | ✓ | ✓ | | Ø 59,0mm |

## OPEL ASTRA G
## VAUXHALL ASTRA Mk IV

02/98→10/05

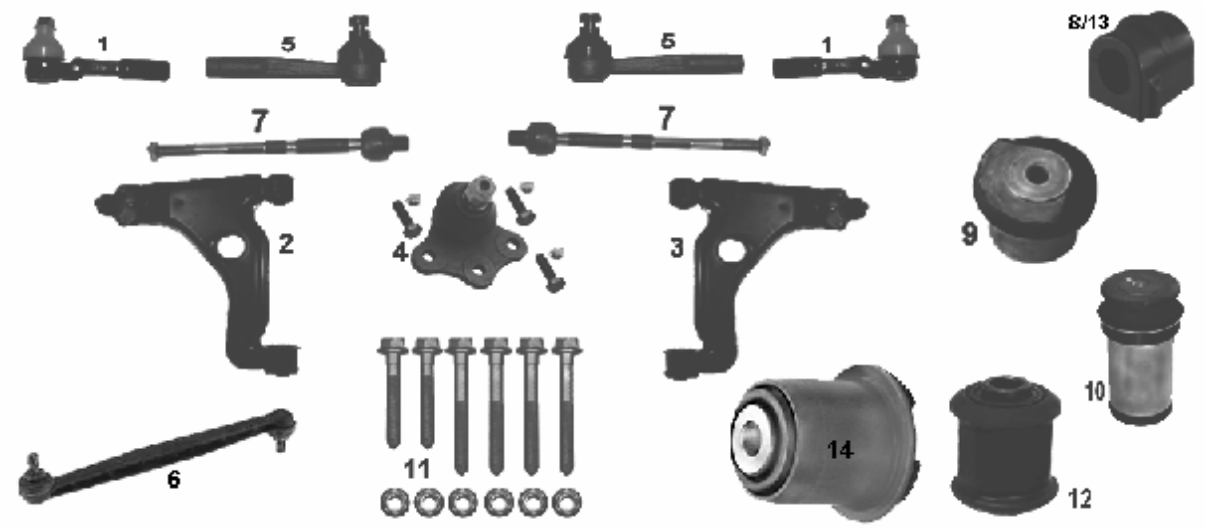


| NR | MAPCO | REF | | | ← | → | ↑ | ↓ | | | NEW | INFO |
|---|---|---|---|---|---|---|---|---|---|---|---|---|
| 1 | **19637** | 1603214 | ✓ | | ✓ | ✓ | | | ✓ | ✓ | | DELPHI |
| 2 | **19633** | 5352016 | ✓ | | ✓ | | | | ✓ | ✓ | | |
| 3 | **19634** | 5352017 | ✓ | | | ✓ | | | ✓ | ✓ | | |
| 4 | **19621** | 352830 | ✓ | | ✓ | ✓ | | | ✓ | ✓ | | |
| 5 | **19638** | 1603215 | ✓ | | ✓ | ✓ | | | ✓ | ✓ | | TRW |
| 6 | **19639** | 350611 | ✓ | | ✓ | ✓ | | | ✓ | ✓ | | |
| 7 | **49607** | 1603216 | ✓ | | ✓ | ✓ | | | ✓ | ✓ | | L= 282mm |
| 8 | **33761** | 0350138 | ✓ | | ✓ | ✓ | | | ✓ | ✓ | | Ø 18mm |
| 9 | **33762** | 5402634 | | ✓ | ✓ | ✓ | | | ✓ | ✓ | | **1.8 16V+2.0 16V** |
| 10 | **33767** | 402644 | | ✓ | ✓ | ✓ | | | ✓ | ✓ | | ✓ **1.8 16V+2.0 16V** |
| 11 | **95633** | | ✓ | | ✓ | ✓ | | | ✓ | ✓ | | MS |
| 12 | **33788** | 352323 | ✓ | | ✓ | ✓ | | | ✓ | ✓ | | |
| 13 | **33789** | 350130 | ✓ | | ✓ | ✓ | | | ✓ | ✓ | | Ø 16mm |
| 14 | **33794** | 352365 | ✓ | | ✓ | ✓ | | | ✓ | ✓ | | Ø 12mm |

## OPEL ASTRA H
## VAUXHALL ASTRA Mk V

03/04→

| NR | MAPCO | REF | | | ← | → | ↑ | ↓ | | | NEW | INFO |
|---|---|---|---|---|---|---|---|---|---|---|---|---|
| 1 | **49612** | 5352029 | ✓ | | ✓ | | | | ✓ | ✓ | | |
| 2 | **49613** | 5352030 | ✓ | | | ✓ | | | ✓ | ✓ | | |
| 3 | **33788** | 352323 | ✓ | | ✓ | ✓ | | | ✓ | ✓ | | |
| 4 | **19621** | 352830 | ✓ | | ✓ | ✓ | | | ✓ | ✓ | | |
| 5 | **49618** | 1603 258 | ✓ | | ✓ | | | | ✓ | ✓ | ✓ | M14x1,5 |
| 6 | **49619** | 1603 257 | ✓ | | | ✓ | | | ✓ | ✓ | ✓ | M14x1,5 |
| 7 | **19639** | 350614 | ✓ | | ✓ | ✓ | | | ✓ | ✓ | | L=300 mm |
| 8 | **36764** | 350161 | ✓ | | ✓ | ✓ | | | ✓ | ✓ | ✓ | |

## OPEL CALIBRA (A)
## VAUXHALL CALIBRA

**1990→ 1997**

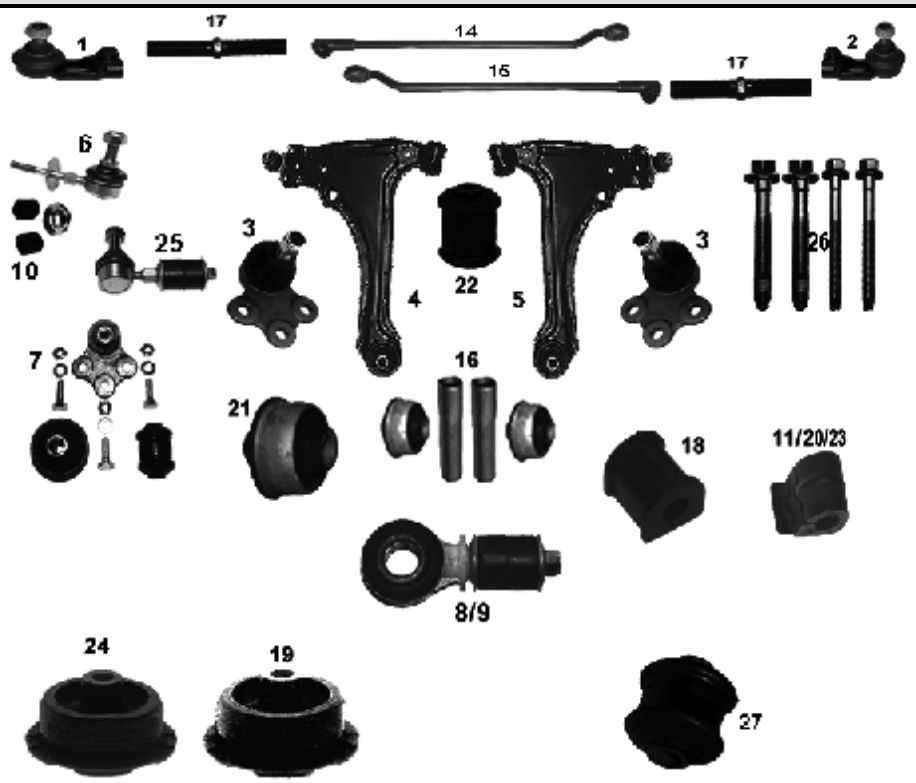


| NR | MAPCO | REF | | | ← | → | ↑ | ↓ | | | NEW | INFO |
|---|---|---|---|---|---|---|---|---|---|---|---|---|
| 1 | 19610 | 324055 | ✓ | | ✓ | | | | ✓ | ✓ | | M16x2,0 RHT |
| 2 | 19611 | 324056 | ✓ | | | ✓ | | | ✓ | ✓ | | M16x2,0 LHT |
| 3 | 19612 | 1603167 | ✓ | | ✓ | ✓ | | | ✓ | ✓ | | |
| 4 | 19619 | 352193 | ✓ | | ✓ | | | | ✓ | ✓ | | Chassis R2595226→ STOP 16V + 4x4 |
| 5 | 19620 | 352192 | ✓ | | | ✓ | | | ✓ | ✓ | | Chassis R2595226→ STOP 16V + 4x4 |
| 6 | 19607 | 350263 | ✓ | | ✓ | ✓ | | | ✓ | ✓ | | |
| 7 | 19270 | | ✓ | | ✓ | ✓ | | | ✓ | ✓ | | Kit |
| 8 | 33726 | 350260 | ✓ | | ✓ | ✓ | | | ✓ | ✓ | | Ø 22 mm |
| 9 | 33727 | 350261 | ✓ | | ✓ | ✓ | | | ✓ | ✓ | | Ø 18 mm |
| 10 | 33728 | | ✓ | | ✓ | ✓ | | | ✓ | ✓ | | **19607** |
| 11 | 33729 | 350078 | ✓ | | ✓ | ✓ | | | ✓ | ✓ | | Ø 22 mm |
| 12 | 49750 | | ✓ | | ✓ | | | | ✓ | ✓ | | **1 + 14 +17** |
| 13 | 49751 | | ✓ | | | ✓ | | | ✓ | ✓ | | **2 + 15 +17** |
| 14 | 49752 | 322147 | ✓ | | ✓ | | | | ✓ | ✓ | | |
| 15 | 49753 | 322146 | ✓ | | | ✓ | | | ✓ | ✓ | | |
| 16 | 33714/2 | | ✓ | | ✓ | ✓ | | | ✓ | ✓ | | Kit |
| 17 | 49604 | 322576 | ✓ | | ✓ | ✓ | | | ✓ | ✓ | | |
| 18 | 33739 | 444153 | | ✓ | ✓ | ✓ | | | ✓ | ✓ | | Ø 14mm |
| 19 | 33754 | 402937 | | ✓ | ✓ | ✓ | | | ✓ | ✓ | | ✓ 4X4 |
| 20 | 33755 | 350081 | ✓ | | ✓ | ✓ | | | ✓ | ✓ | | Ø 18 mm |
| 21 | 33714 | 352348 | ✓ | | ✓ | ✓ | | | ✓ | ✓ | | |
| 22 | 33725 | 352300 | ✓ | | ✓ | ✓ | | | ✓ | ✓ | | |
| 23 | 33760 | 350125 | ✓ | | ✓ | ✓ | | | ✓ | ✓ | | Ø 24 mm |
| 24 | 33879 | 402935 | | ✓ | ✓ | ✓ | | | ✓ | ✓ | | STOP 4X4 |
| 25 | 19607/8HPS | 350263S1 | ✓ | | ✓ | ✓ | | | ✓ | ✓ | | |
| 26 | 95619 | | ✓ | | ✓ | ✓ | | | ✓ | ✓ | | MS |
| 27 | 33787 | 423313 | | ✓ | ✓ | ✓ | | | ✓ | ✓ | ✓ | Ø 18 mm |

## OPEL CAMPO (TF_) 08/91→

| NR | MAPCO | REF | | | ← | → | ↑ | ↓ | | | NEW | INFO |
|---|---|---|---|---|---|---|---|---|---|---|---|---|
| 1 | 49616 | 8-94459-464-1 | ✓ | | ✓ | ✓ | | ✓ | ✓ | ✓ | ✓ | 1 |

## OPEL CORSA A 09/82 → 03/93

1

2

| NR | MAPCO | REF | | | ← | → | ↑ | ↓ | | | NEW | INFO |
|---|---|---|---|---|---|---|---|---|---|---|---|---|
| 1 | 36700 | | ✓ | | ✓ | ✓ | | | ✓ | ✓ | | |
| 2 | 36701 | | ✓ | | ✓ | ✓ | | | ✓ | ✓ | | |

## OPEL CORSA A - CORSA COMBO 09/82→12/92
## VAUXHALL NOVA 09/82→12/92

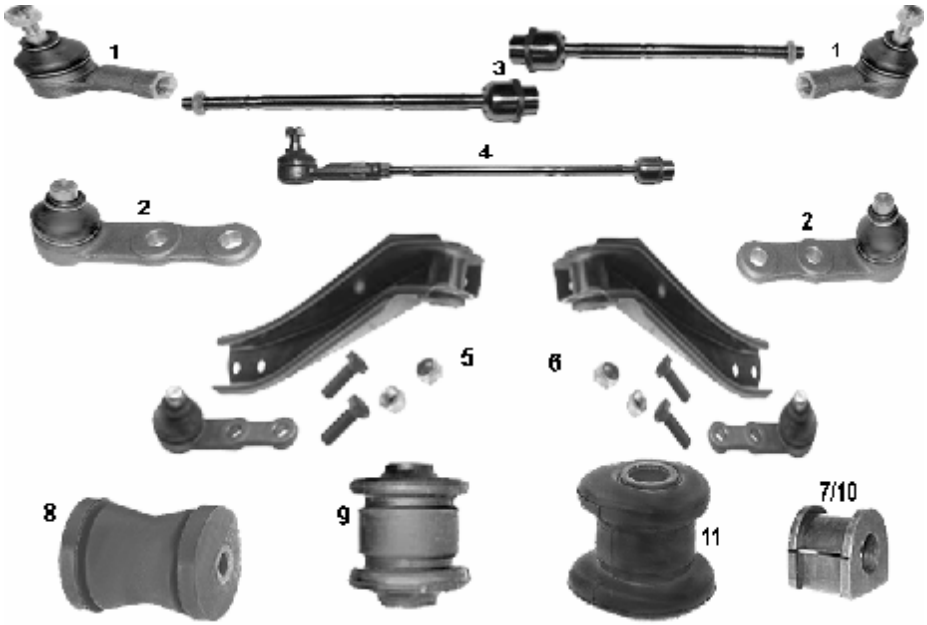


| NR | MAPCO | REF | | | ← | → | ↑ | ↓ | | | NEW | INFO |
|---|---|---|---|---|---|---|---|---|---|---|---|---|
| 1 | 19800 | 324050 | ✓ | | ✓ | ✓ | | | ✓ | ✓ | | M12x1,5RHT |
| 2 | 19801 | 1603187 | ✓ | | ✓ | ✓ | | | ✓ | ✓ | | |
| 3 | 19805 | 322149 | ✓ | | ✓ | ✓ | | | ✓ | ✓ | | M12x1,5RHT |
| 4 | 19805/1 | | ✓ | | ✓ | ✓ | | | ✓ | ✓ | | 1+3 |
| 5 | 19806 | | ✓ | | ✓ | | | | ✓ | ✓ | | |
| 6 | 19807 | | ✓ | | | ✓ | | | ✓ | ✓ | | |
| 7 | 33735 | 350109 | ✓ | | ✓ | ✓ | | | ✓ | ✓ | | Ø 21,5mm |
| 8 | 33737 | 402643 | ✓ | | ✓ | ✓ | | | ✓ | ✓ | | |
| 9 | 33793 | 352327 | ✓ | | ✓ | ✓ | | | ✓ | ✓ | | Ø 10mm |
| 10 | 33740 | 350109 | ✓ | | ✓ | ✓ | | | ✓ | ✓ | | Ø 17mm |
| 11 | 33795 | 353560 | ✓ | | ✓ | ✓ | | | ✓ | ✓ | | Ø 14mm |

## OPEL CORSA B - CORSA B COMBO 1993→09/00

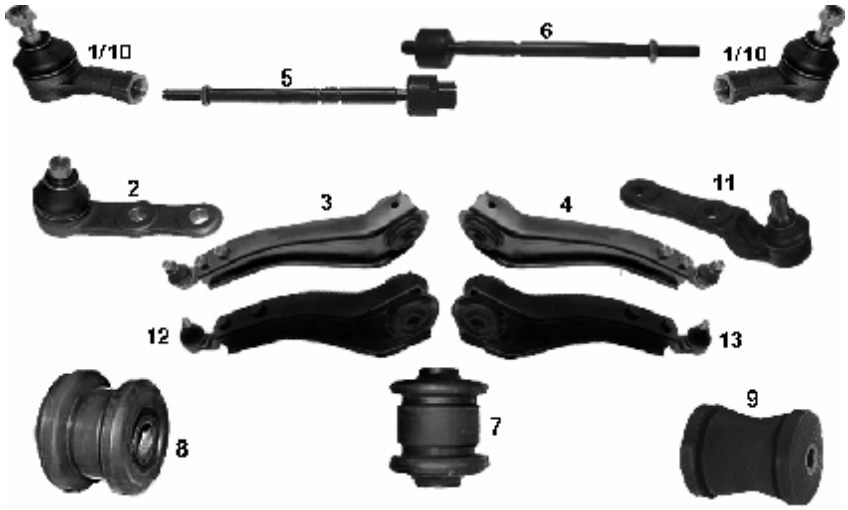


| NR | MAPCO | REF | | | ← | → | ↑ | ↓ | | | NEW | INFO |
|---|---|---|---|---|---|---|---|---|---|---|---|---|
| 1 | 19800 | 324050 | ✓ | | ✓ | ✓ | | | ✓ | ✓ | | →1996 M12x1,5RHT |
| 2 | 19801 | 1603187 | ✓ | | ✓ | ✓ | | | ✓ | ✓ | | →1996 ∅ 15mm |
| 3 | 19808 | 352003 | ✓ | | ✓ | | | | ✓ | ✓ | | →1996 |
| 4 | 19809 | 352002 | ✓ | | | ✓ | | | ✓ | ✓ | | →1996 |
| 5 | 49754 | 322155 | ✓ | | ✓ | ✓ | | | | ✓ | | |
| 6 | 49755 | 322158 | ✓ | | ✓ | ✓ | | | ✓ | | | |
| 7 | 33733 | 352301 | ✓ | | ✓ | ✓ | | | ✓ | ✓ | | |
| 8 | 33734 | 353561 | ✓ | | ✓ | ✓ | | | ✓ | ✓ | | |
| 9 | 33737 | 402643 | ✓ | | ✓ | ✓ | | | ✓ | ✓ | | |
| 10 | 19631 | 324066 | ✓ | | ✓ | ✓ | | | ✓ | ✓ | | 1996→ M12 x 1,5 RHT |
| 11 | 19632 | 1603202 | ✓ | | ✓ | ✓ | | | ✓ | ✓ | | 1996→ ∅ 15mm |
| 12 | 19635 | 5352011 | ✓ | | ✓ | | | | ✓ | ✓ | | 1996 → |
| 13 | 19636 | 5352012 | ✓ | | | ✓ | | | ✓ | ✓ | | 1996 → |

## OPEL CORSA C - CORSA C COMBO 09/00 →

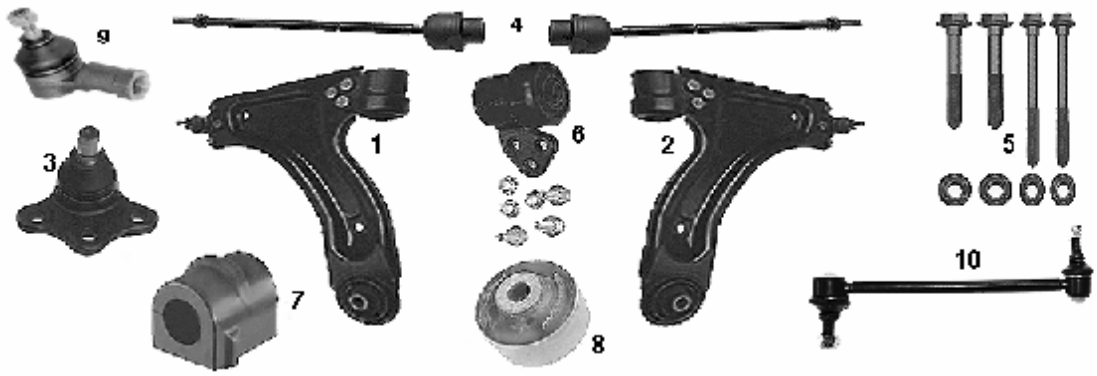


| NR | MAPCO | REF | | | ← | → | ↑ | ↓ | | | NEW | INFO |
|---|---|---|---|---|---|---|---|---|---|---|---|---|
| 1 | 49608 | 352041 | ✓ | | ✓ | | | | ✓ | ✓ | | |
| 2 | 49609 | 352042 | ✓ | | | ✓ | | | ✓ | ✓ | | |
| 3 | 49610 | 352803 | ✓ | | ✓ | ✓ | | | ✓ | ✓ | | |
| 4 | 19810 | 1603008 | ✓ | | ✓ | ✓ | | | ✓ | ✓ | | |
| 5 | 95608 | | ✓ | | ✓ | ✓ | | | ✓ | ✓ | | MS |
| 6 | 33768 | 352309 | ✓ | | ✓ | ✓ | | | ✓ | ✓ | | |
| 7 | 33789 | 350130 | ✓ | | ✓ | ✓ | | | ✓ | ✓ | | Ø 16mm |
| 8 | 33796 | 352310 | ✓ | | ✓ | ✓ | | | ✓ | ✓ | | |
| 9 | 19800 | 324050 | ✓ | | ✓ | ✓ | | | ✓ | ✓ | | M12x1,5RHT |
| 10 | 19600HPS | 350610 | ✓ | | ✓ | ✓ | | | ✓ | ✓ | | |

## OPEL CORSA D 07/06 →

| NR | MAPCO | REF | | | ← | → | ↑ | ↓ | | | NEW | INFO |
|---|---|---|---|---|---|---|---|---|---|---|---|---|
| 1 | 19097 | 5352 039 | ✓ | | ✓ | | | | ✓ | ✓ | ✓ | |
| 2 | 19098 | 5352 038 | ✓ | | | ✓ | | | ✓ | ✓ | ✓ | |
| 3 | 33044 | 352 380 | ✓ | | ✓ | ✓ | | | ✓ | ✓ | ✓ | |
| 4 | 33045 | 352 864 | ✓ | | ✓ | ✓ | | | ✓ | ✓ | ✓ | |

## OPEL FRONTERA A 1991 → 1998

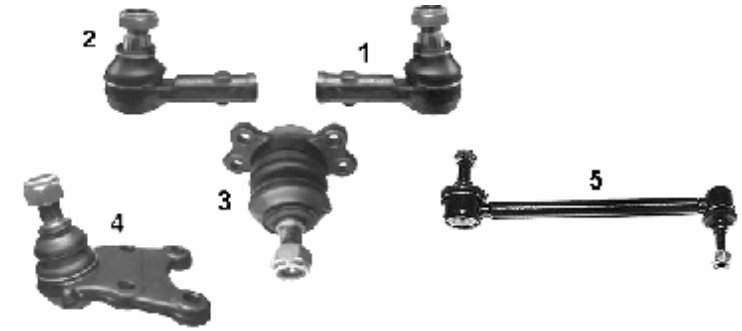


| NR | MAPCO | REF | | | ← | → | ↑ | ↓ | | | NEW | INFO |
|---|---|---|---|---|---|---|---|---|---|---|---|---|
| 1 | 49742 | 324058 | ✓ | | ✓ | ✓ | | | ✓ | ✓ | | M14 x 1,5LHT |
| 2 | 49743 | 324057 | ✓ | | ✓ | ✓ | | | ✓ | ✓ | | M14 x 1,5RHT |
| 3 | 49744 | 310821 | ✓ | | ✓ | ✓ | ✓ | | ✓ | ✓ | | |
| 4 | 49745 | 352828 | ✓ | | ✓ | ✓ | | ✓ | ✓ | ✓ | | |
| 5 | 51594HPS | 444065 | | ✓ | ✓ | ✓ | | | ✓ | ✓ | ✓ | |

## OPEL FRONTERA B 10/98 →

| NR | MAPCO | REF | | | ← | → | ↑ | ↓ | | | NEW | INFO |
|---|---|---|---|---|---|---|---|---|---|---|---|---|
| 1 | 19811HPS | 350607 | ✓ | | ✓ | | | | ✓ | ✓ | | |
| 2 | 59849 | 350608 | ✓ | | | ✓ | | | ✓ | ✓ | | |
| 3 | 49603 | 900905 | ✓ | | ✓ | ✓ | | | ✓ | ✓ | | M14x1,50RHT |

## OPEL KADETT D
## VAUXHALL ASTRA CC

**09/79→ 08/84**

| NR | MAPCO | REF | | | ← | → | ↑ | ↓ | | | NEW | INFO |
|---|---|---|---|---|---|---|---|---|---|---|---|---|
| 1 | **19710** | 324036 | ✓ | | ✓ | | | | ✓ | ✓ | | → 09/81 M16x1,5RHT |
| 2 | **19711** | 324037 | ✓ | | | ✓ | | | ✓ | ✓ | | → 09/81 M16x1,5RHT |
| 3 | **33752** | 352349 | ✓ | | ✓ | ✓ | | | ✓ | ✓ | | |
| 4 | **33757** | 352335 | ✓ | | ✓ | ✓ | | | ✓ | ✓ | | |
| 5 | **19714** | 1603164 | ✓ | | ✓ | ✓ | | | ✓ | ✓ | | 10/81→ |
| 6 | **49756** | 352147 | ✓ | | ✓ | | | | ✓ | ✓ | | 10/81→ 09/84 |
| 7 | **49757** | | ✓ | | | ✓ | | | ✓ | ✓ | | 10/81→ 09/84 |
| 8 | **59367** | 07846696 | ✓ | | ✓ | ✓ | | | ✓ | ✓ | | |
| 9 | **33785** | 402642 | | ✓ | ✓ | ✓ | | | ✓ | ✓ | ✓ | Ø 48,0mm |

## OPEL KADETT E
## VAUXHALL CAVALIER Mk II

**09/84→ 1990**

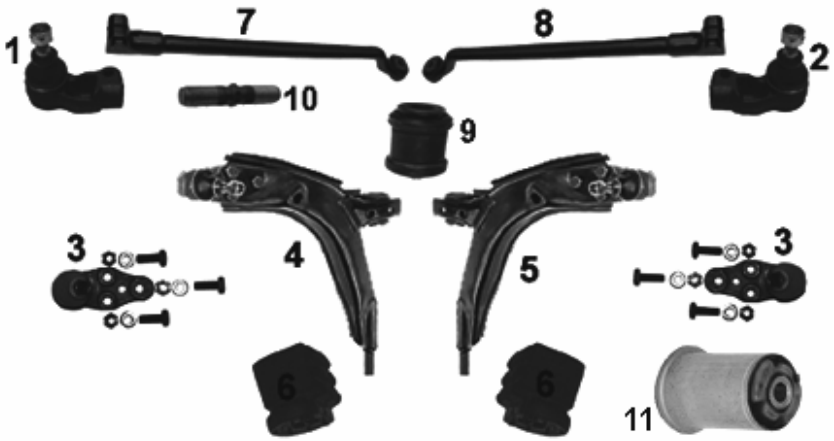


| NR | MAPCO | REF | | | ← | → | ↑ | ↓ | | | NEW | INFO |
|---|---|---|---|---|---|---|---|---|---|---|---|---|
| 1 | **19718** | 324039 | ✓ | | ✓ | | | | ✓ | ✓ | | M16x1,5RHT |
| 2 | **19719** | 324038 | ✓ | | | ✓ | | | ✓ | ✓ | | M16x1,5LHT |
| 3 | **19714** | 1603164 | ✓ | | ✓ | ✓ | | | ✓ | ✓ | | |
| 4 | **49756** | 352169 | ✓ | | ✓ | | | | ✓ | ✓ | | |
| 5 | **49757** | 352170 | ✓ | | | ✓ | | | ✓ | ✓ | | |
| 6 | **33757** | 352335 | ✓ | | ✓ | ✓ | | | ✓ | ✓ | | |
| 7 | **59295** | 322125 | ✓ | | ✓ | | | | ✓ | ✓ | | |
| 8 | **59296** | 322126 | ✓ | | | ✓ | | | ✓ | ✓ | | |
| 9 | **33752** | 352349 | ✓ | | ✓ | ✓ | | | ✓ | ✓ | | |
| 10 | **59367** | 07846696 | ✓ | | ✓ | ✓ | | | ✓ | ✓ | | |
| 11 | **33785** | 402642 | | ✓ | ✓ | ✓ | | | ✓ | ✓ | | Ø 48,0mm |

## OPEL MERIVA 05/03 →

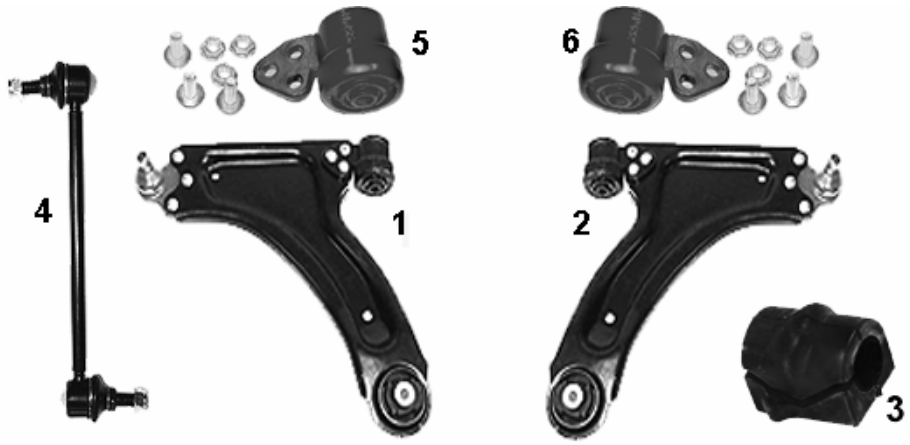


| NR | MAPCO | REF | | | ← | → | ↑ | ↓ | | | NEW | INFO |
|---|---|---|---|---|---|---|---|---|---|---|---|---|
| 1 | 49614 | 5352027 | ✓ | | ✓ | ✓ | | ✓ | ✓ | ✓ | | |
| 2 | 49615 | 5352028 | ✓ | | ✓ | ✓ | | ✓ | ✓ | ✓ | | |
| 3 | 33764 | 350161 | ✓ | | ✓ | ✓ | | ✓ | ✓ | ✓ | | |
| 4 | 19600HPS | 350610 | ✓ | | ✓ | ✓ | | | ✓ | ✓ | | |
| 5 | 33768 | 352309 | ✓ | | ✓ | ✓ | | | ✓ | ✓ | | |
| 6 | 33796 | 352310 | ✓ | | ✓ | ✓ | | | ✓ | ✓ | | |

## OPEL MONTEREY A (UBS_) 09/91→07/98

| NR | MAPCO | REF | | | ← | → | ↑ | ↓ | | | NEW | INFO |
|---|---|---|---|---|---|---|---|---|---|---|---|---|
| 1 | 51594HPS | 444065 | | ✓ | ✓ | ✓ | | | ✓ | ✓ | ✓ | 1 |

## OPEL MONTEREY B 07/98→08/99

| NR | MAPCO | REF | | | ← | → | ↑ | ↓ | | | NEW | INFO |
|---|---|---|---|---|---|---|---|---|---|---|---|---|
| 1 | 19811HPS | 350607 | ✓ | | ✓ | | | | ✓ | ✓ | | |
| 2 | 59849 | 350608 | ✓ | | | ✓ | | | ✓ | ✓ | | |
| 3 | 51594HPS | 444065 | | ✓ | ✓ | ✓ | | | ✓ | ✓ | ✓ | |

## OPEL MOVANO (J9) 07/98 →

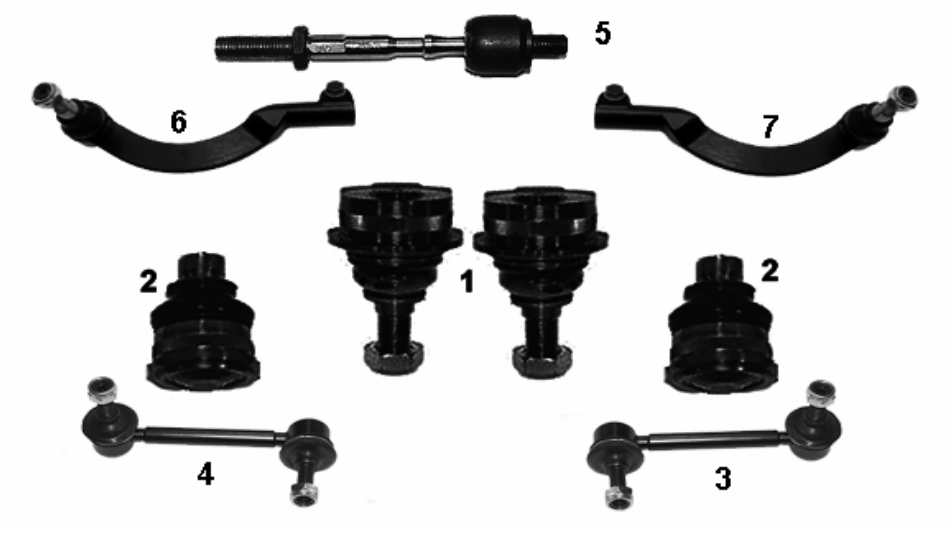


| NR | MAPCO | REF | | | ← | → | ↑ | ↓ | | | NEW | INFO |
|---|---|---|---|---|---|---|---|---|---|---|---|---|
| 1 | **49110** | 4500 254 | ✓ | | ✓ | ✓ | ✓ | | ✓ | ✓ | | |
| 2 | **49111** | 4401 909 | ✓ | | ✓ | ✓ | | ✓ | ✓ | ✓ | | |
| 3 | **49108HPS** | 4500 199 | ✓ | | | ✓ | | | ✓ | ✓ | | |
| 4 | **49109HPS** | 4500 198 | ✓ | | ✓ | | | | ✓ | ✓ | | |
| 5 | **49125** | 450 1261 | ✓ | | ✓ | ✓ | | | | ✓ | | |
| 6 | **49137** | 450 1262 | ✓ | | ✓ | | | | ✓ | ✓ | | (M16x1,5RHT) L= 225mm |
| 7 | **49138** | 4501 263 | ✓ | | | ✓ | | | ✓ | ✓ | | (M16x1,5RHT) L= 225mm |

## OPEL OMEGA A - SENATOR B
## VAUXHALL CARLTON MK II

08/86→ 1993

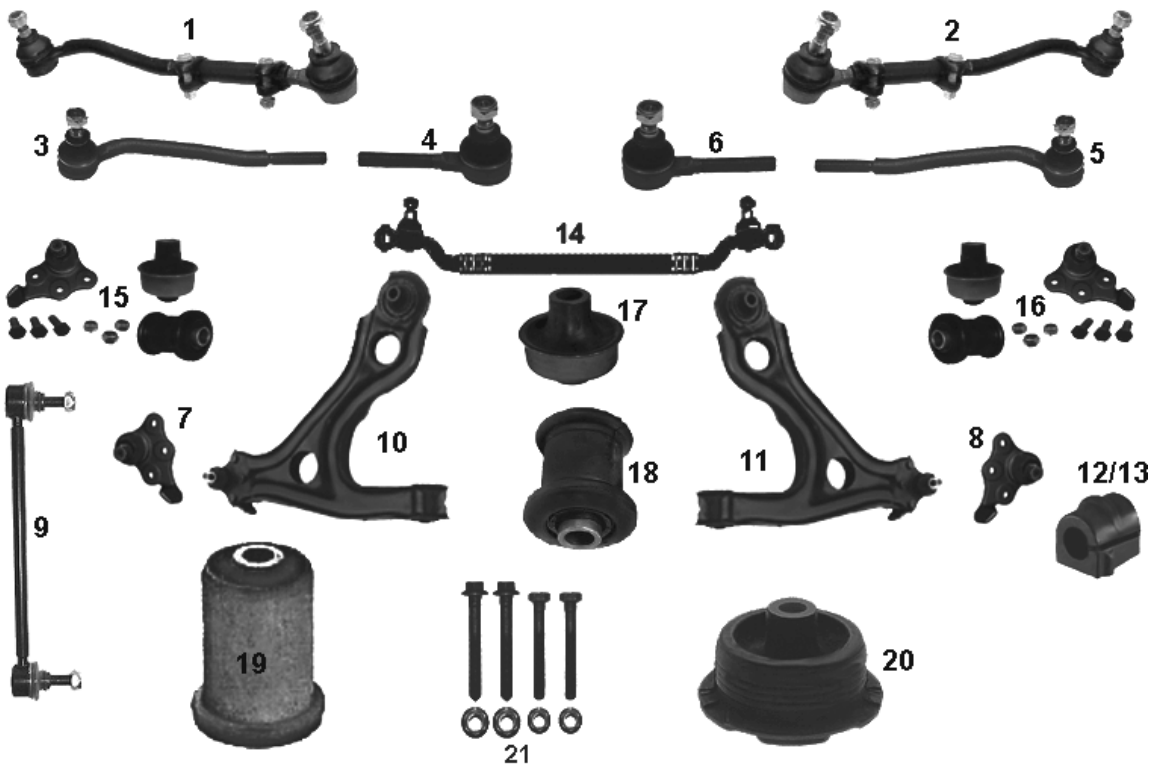


| NR | MAPCO | REF | | | ← | → | ↑ | ↓ | | | NEW | INFO |
|---|---|---|---|---|---|---|---|---|---|---|---|---|
| 1 | 19803/1 | 322142 | ✓ | | ✓ | | | | ✓ | ✓ | | |
| 2 | 19804/1 | 322143 | ✓ | | | ✓ | | | ✓ | ✓ | | |
| 3 | 19613 | 322175 | ✓ | | ✓ | | | | ✓ | ✓ | | M14x1,5RHT |
| 4 | 19615 | 322171 | ✓ | | | ✓ | | | ✓ | ✓ | | M14x1,5LHT |
| 5 | 19614 | 322176 | ✓ | | | ✓ | | | ✓ | ✓ | | M14x1,5LHT |
| 6 | 19616 | 322172 | ✓ | | ✓ | | | | ✓ | ✓ | | M14x1,5RHT |
| 7 | 19617 | 352826 | ✓ | | ✓ | | | | ✓ | ✓ | | |
| 8 | 19618 | 352827 | ✓ | | | ✓ | | | ✓ | ✓ | | |
| 9 | 19602HPS | 350605 | ✓ | | ✓ | ✓ | | | ✓ | ✓ | | |
| 10 | 19624 | 352135 | ✓ | | ✓ | | | | ✓ | ✓ | | |
| 11 | 19625 | 352136 | ✓ | | | ✓ | | | ✓ | ✓ | | |
| 12 | 33791 | 0350147 | ✓ | | ✓ | ✓ | | | ✓ | ✓ | | Ø innen/ inner 23 mm |
| 13 | 33730 | 350116 | ✓ | | ✓ | ✓ | | | ✓ | ✓ | | Ø innen/ inner 22 mm |
| 14 | 49760 | 322139 | ✓ | | ✓ | ✓ | | | ✓ | | | |
| 15 | 19217 | | ✓ | | ✓ | | | | ✓ | ✓ | | Kit |
| 16 | 19218 | | ✓ | | | ✓ | | | ✓ | ✓ | | Kit |
| 17 | 33715 | 352355 | ✓ | | ✓ | ✓ | | | ✓ | ✓ | | |
| 18 | 33716 | 352341 | ✓ | | ✓ | ✓ | | | ✓ | ✓ | | |
| 19 | 33895 | 423315 | | ✓ | ✓ | ✓ | | | ✓ | ✓ | | |
| 20 | 33879 | 402935 | | ✓ | ✓ | ✓ | | | ✓ | ✓ | | |
| 21 | 95624 | | ✓ | | ✓ | ✓ | | | ✓ | ✓ | | MS |

## OPEL OMEGA B
## VAUXHALL CARLTON Mk III

1994→

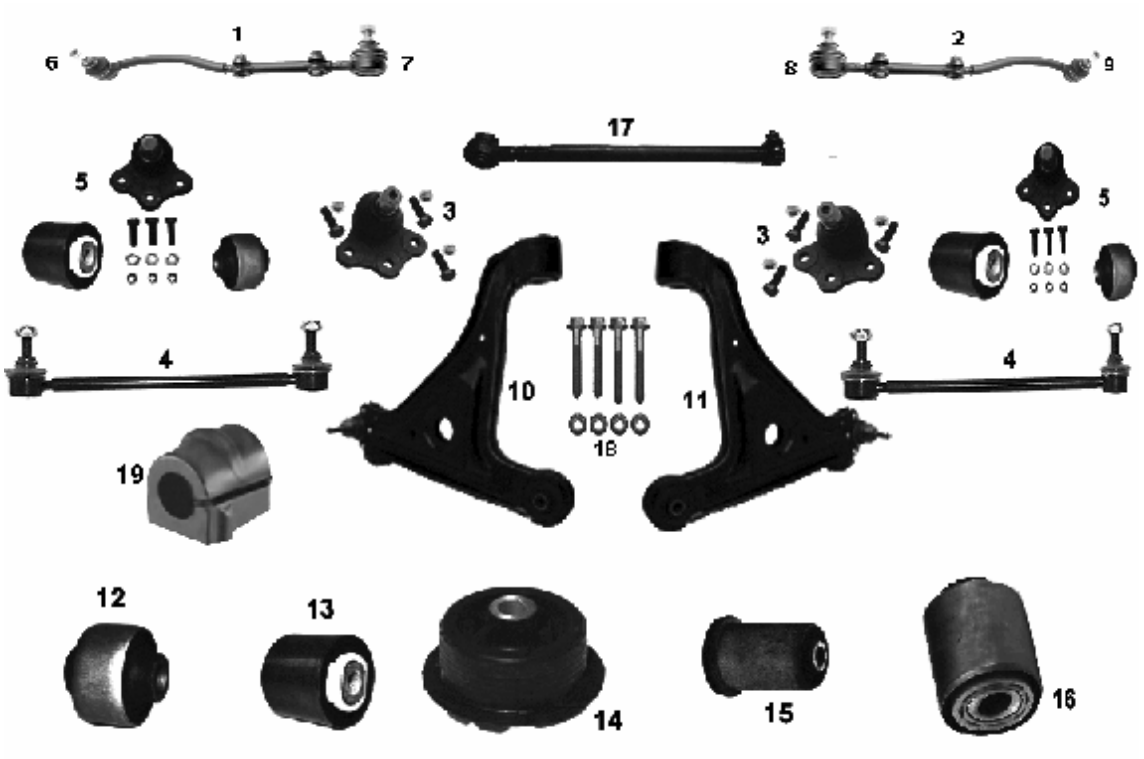


| NR | MAPCO | REF | | | ← | → | ↑ | ↓ | | | NEW | INFO |
|---|---|---|---|---|---|---|---|---|---|---|---|---|
| 1 | 19812 | 322169 | ✓ | | ✓ | | | | ✓ | ✓ | | |
| 2 | 19813 | 322168 | ✓ | | | ✓ | | | ✓ | ✓ | | |
| 3 | 19621 | 352830 | ✓ | | ✓ | ✓ | | | ✓ | ✓ | | |
| 4 | 19606HPS | 350609 | ✓ | | ✓ | ✓ | | | ✓ | ✓ | | |
| 5 | 19221 | | ✓ | | ✓ | ✓ | | | ✓ | ✓ | | Kit |
| 6 | 49758 | 324059 | ✓ | | ✓ | | | | ✓ | ✓ | | M14 x 1,5RHT |
| 7 | 49600 | 324061 | ✓ | | ✓ | | | | ✓ | ✓ | | M14 x 1,5LHT |
| 8 | 49601 | 324062 | ✓ | | | ✓ | | | ✓ | ✓ | | M14 x 1,5RHT |
| 9 | 49759 | 324060 | ✓ | | | ✓ | | | ✓ | ✓ | | M14 x 1,5LHT |
| 10 | 19629 | 352007 | ✓ | | ✓ | | | | ✓ | ✓ | | |
| 11 | 19630 | 352008 | ✓ | | | ✓ | | | ✓ | ✓ | | |
| 12 | 33848 | 352457 | ✓ | | ✓ | ✓ | | | ✓ | ✓ | | |
| 13 | 33849 | 352458 | ✓ | | ✓ | ✓ | | | ✓ | ✓ | | |
| 14 | 33753 | 402942 | | ✓ | ✓ | ✓ | | | ✓ | ✓ | | |
| 15 | 33895 | 423315 | | ✓ | ✓ | ✓ | | | ✓ | ✓ | | |
| 16 | 33766 | 402649 | | ✓ | ✓ | ✓ | | | ✓ | ✓ | | |
| 17 | 49605 | 423017 | | ✓ | ✓ | ✓ | | | ✓ | ✓ | | M16x1,50LHT |
| 18 | 95629 | | ✓ | | ✓ | ✓ | | | ✓ | ✓ | | MS |
| 19 | 33791 | 350147 | ✓ | | ✓ | ✓ | | | ✓ | ✓ | | Ø 23mm |

## OPEL REKORD / VAUXHALL CARLTON
## OPEL COMMODORE
## OPEL MONZA - SENATOR

09/77→ 1986
09/77→ 1982
1977→ 08/86

| NR | MAPCO | REF | | | ← | → | ↑ | ↓ | | | NEW | INFO |
|---|---|---|---|---|---|---|---|---|---|---|---|---|
| 1 | 19816 | 352823 | ✓ | | ✓ | ✓ | | | ✓ | ✓ | | |

## OPEL SIGNUM 05/03→

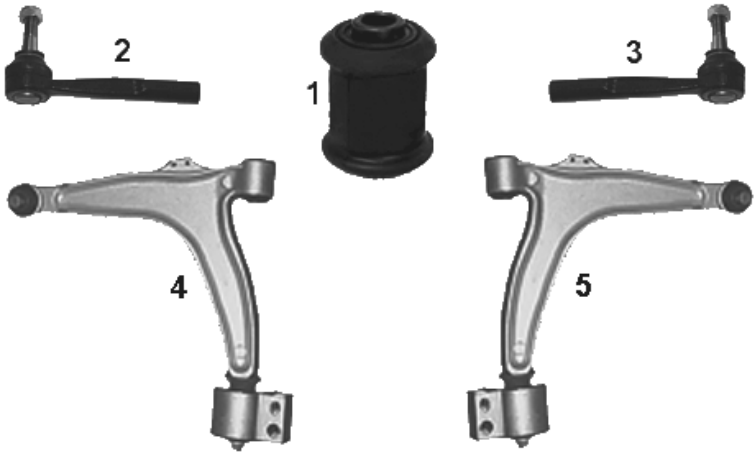


| NR | MAPCO | REF | | | ← | → | ↑ | ↓ | | | NEW | INFO |
|---|---|---|---|---|---|---|---|---|---|---|---|---|
| 1 | **33788** | 352323 | ✓ | | ✓ | ✓ | | | ✓ | ✓ | | |
| 2 | **49620** | 160 3227 | ✓ | | ✓ | | | | ✓ | ✓ | ✓ | M14x1,5 |
| 3 | **49621** | 160 3228 | ✓ | | | ✓ | | | ✓ | ✓ | ✓ | M14x1,5 |
| 4 | **49623** | 352051 | ✓ | | ✓ | | | | ✓ | ✓ | ✓ | |
| 5 | **49624** | 352052 | ✓ | | | ✓ | | | ✓ | ✓ | ✓ | |

## OPEL TIGRA 07/94→

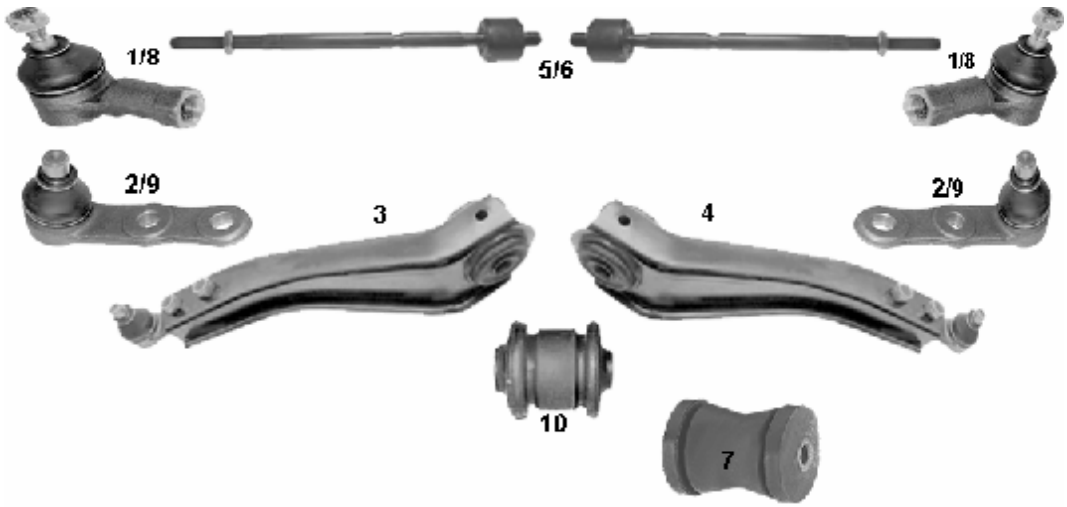


| NR | MAPCO | REF | | | ← | → | ↑ | ↓ | | | NEW | INFO |
|---|---|---|---|---|---|---|---|---|---|---|---|---|
| 1 | **19800** | 352050 | ✓ | | ✓ | ✓ | | | ✓ | ✓ | | →1996 M12 X1,5RHT |
| 2 | **19801** | 1603187 | ✓ | | ✓ | ✓ | | | ✓ | ✓ | | →1996 |
| 3 | **19808** | 352 003 | ✓ | | ✓ | | | | ✓ | ✓ | | |
| 4 | **19809** | 352002 | ✓ | | | ✓ | | | ✓ | ✓ | | |
| 5 | **49754** | 322155 | ✓ | | ✓ | ✓ | | | | ✓ | | |
| 6 | **49755** | 352158 | ✓ | | ✓ | ✓ | | | ✓ | | | |
| 7 | **33737** | 402643 | ✓ | | ✓ | ✓ | | | ✓ | ✓ | | |
| 8 | **19631** | 324066 | ✓ | | ✓ | ✓ | | | ✓ | ✓ | | 1996→ M12 x 1,5 RHT |
| 9 | **19632** | 1603202 | ✓ | | ✓ | ✓ | | | ✓ | ✓ | | 1996→ |
| 10 | **33733** | 352301 | ✓ | | ✓ | ✓ | | | ✓ | ✓ | | |

# OPEL VECTRA A
# VAUXHALL CAVALIER

09/88→ 1995

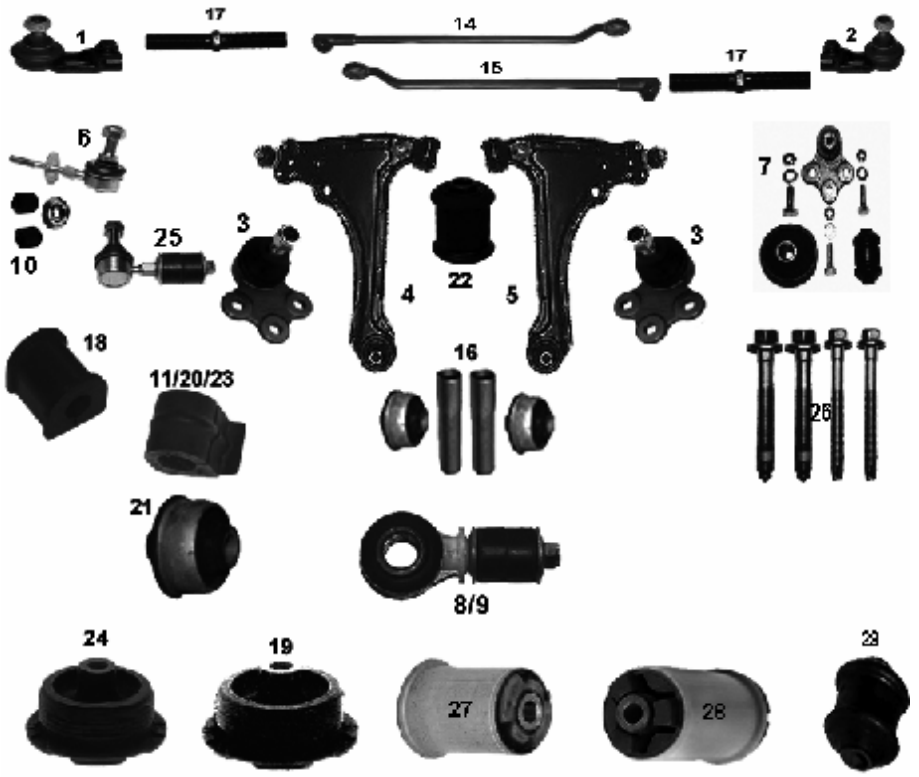


| NR | MAPCO | REF | | | ← | → | ↑ | ↓ | | | NEW | INFO |
|---|---|---|---|---|---|---|---|---|---|---|---|---|
| 1 | 19610 | 324055 | ✓ | | ✓ | | | | ✓ | ✓ | | M16x2,0 RHT |
| 2 | 19611 | 324056 | ✓ | | | ✓ | | | ✓ | ✓ | | M16x2,0 LHT |
| 3 | 19612 | 1603167 | ✓ | | ✓ | ✓ | | | ✓ | ✓ | | |
| 4 | 19619 | 352193 | ✓ | | ✓ | | | | ✓ | ✓ | | Chassis R2595226→ STOP 16V + 4x4 |
| 5 | 19620 | 352192 | ✓ | | | ✓ | | | ✓ | ✓ | | Chassis R2595226→ STOP 16V + 4x4 |
| 6 | 19607 | 350263 | ✓ | | ✓ | ✓ | | | ✓ | ✓ | | |
| 7 | 19270 | | ✓ | | ✓ | ✓ | | | ✓ | ✓ | | Kit |
| 8 | 33726 | 350260 | ✓ | | ✓ | ✓ | | | ✓ | ✓ | | Ø 22 mm |
| 9 | 33727 | 350261 | ✓ | | ✓ | ✓ | | | ✓ | ✓ | | Ø 18 mm |
| 10 | 33728 | | ✓ | | ✓ | ✓ | | | ✓ | ✓ | | **19607** |
| 11 | 33729 | 350078 | ✓ | | ✓ | ✓ | | | ✓ | ✓ | | Ø 22 mm |
| 12 | 49750 | | ✓ | | ✓ | | | | ✓ | ✓ | | **1 + 14 +17** |
| 13 | 49751 | | ✓ | | | ✓ | | | ✓ | ✓ | | **2 + 15 +17** |
| 14 | 49752 | 322147 | ✓ | | ✓ | | | | ✓ | ✓ | | |
| 15 | 49753 | 322146 | ✓ | | | ✓ | | | ✓ | ✓ | | |
| 16 | 33714/2 | | ✓ | | ✓ | ✓ | | | ✓ | ✓ | | Kit |
| 17 | 49604 | 322576 | ✓ | | ✓ | ✓ | | | ✓ | ✓ | | |
| 18 | 33739 | 444153 | | ✓ | ✓ | ✓ | | | ✓ | ✓ | | Ø 14mm |
| 19 | 33754 | 402937 | | ✓ | ✓ | ✓ | | | ✓ | ✓ | | ✓ 4X4 |
| 20 | 33755 | 350081 | ✓ | | ✓ | ✓ | | | ✓ | ✓ | | Ø 18 mm |
| 21 | 33714 | 352348 | ✓ | | ✓ | ✓ | | | ✓ | ✓ | | |
| 22 | 33725 | 352300 | ✓ | | ✓ | ✓ | | | ✓ | ✓ | | |
| 23 | 33760 | 350125 | ✓ | | ✓ | ✓ | | | ✓ | ✓ | | Ø 24 mm |
| 24 | 33879 | 402935 | | ✓ | ✓ | ✓ | | | ✓ | ✓ | | STOP 4X4 |
| 25 | 19607/8HPS | 350263S1 | ✓ | | ✓ | ✓ | | | ✓ | ✓ | | |
| 26 | 95619 | | ✓ | | ✓ | ✓ | | | ✓ | ✓ | | MS |
| 27 | 33785 | 402642 | | ✓ | ✓ | ✓ | | | ✓ | ✓ | ✓ | Ø 48,0mm |
| 28 | 33786 | 402645 | | ✓ | ✓ | ✓ | | | ✓ | ✓ | ✓ | Ø 59,0mm |
| 29 | 33787 | 423313 | | ✓ | ✓ | ✓ | | | ✓ | ✓ | ✓ | Ø 18 mm |

# OPEL VECTRA B
# VAUXHALL VECTRA

1996→ 2000

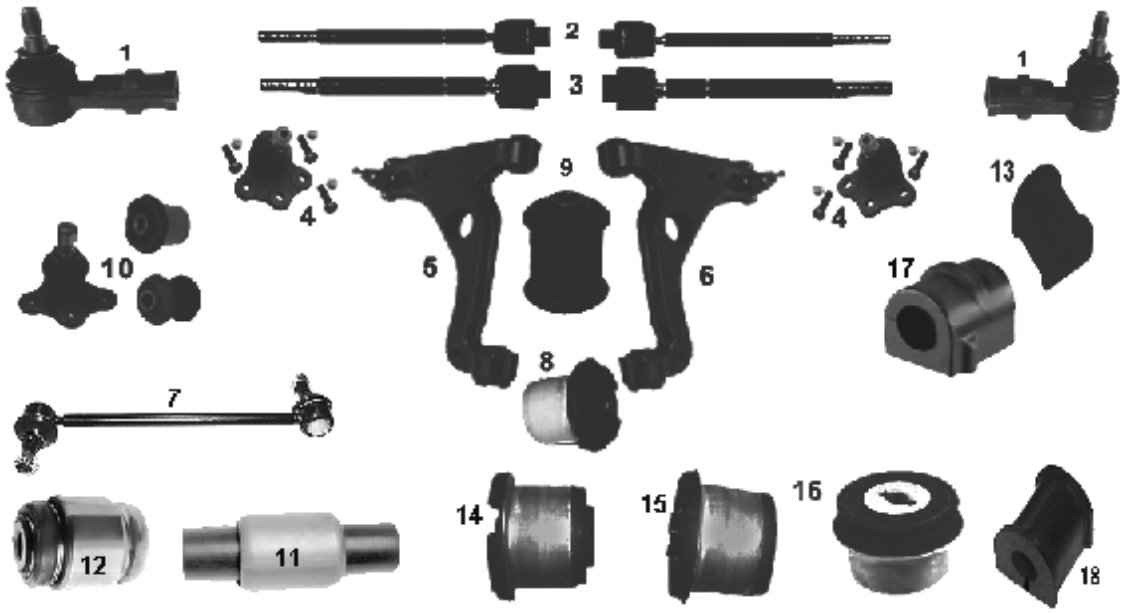


| NR | MAPCO | REF | | | ← | → | ↑ | ↓ | | | NEW | INFO |
|---|---|---|---|---|---|---|---|---|---|---|---|---|
| 1 | **19626** | 324063 | ✓ | | ✓ | ✓ | | | ✓ | ✓ | | M14 x 1,5RHT |
| 2 | **19627** | 1603199 | ✓ | | ✓ | ✓ | | | ✓ | ✓ | | 365mm **SAGINAW** |
| 3 | **19628** | 1603198 | ✓ | | ✓ | ✓ | | | ✓ | ✓ | | 322mm **ZF** |
| 4 | **19621** | 352830 | ✓ | | ✓ | ✓ | | | ✓ | ✓ | | |
| 5 | **19622** | 5352005 | ✓ | | ✓ | | | | ✓ | ✓ | | |
| 6 | **19623** | 5352004 | ✓ | | | ✓ | | | ✓ | ✓ | | |
| 7 | **19600HPS** | 350610 | ✓ | | ✓ | ✓ | | | ✓ | ✓ | | M12 x 1,5 |
| 8 | **33731** | 352358 | ✓ | | ✓ | ✓ | | | ✓ | ✓ | | |
| 9 | **33732** | 352357 | ✓ | | ✓ | ✓ | | | ✓ | ✓ | | |
| 10 | **19271** | | ✓ | | ✓ | ✓ | | | ✓ | ✓ | | Kit |
| 11 | **33736** | 423316 | | ✓ | ✓ | ✓ | | | ✓ | ✓ | | |
| 12 | **33877** | 423121 | | ✓ | ✓ | ✓ | | | ✓ | ✓ | | |
| 13 | **33739** | 444153 | | ✓ | ✓ | ✓ | | | ✓ | ✓ | | Ø 14mm |
| 14 | **33756** | 5402631 | | ✓ | ✓ | ✓ | | | ✓ | ✓ | | Ø 64mm |
| 15 | **33758** | 5402630 | | ✓ | ✓ | ✓ | | | ✓ | ✓ | | Ø 67mm |
| 16 | **33720** | 423318 | | ✓ | ✓ | ✓ | | | ✓ | ✓ | | Ø 60mm |
| 17 | **33789** | 350130 | ✓ | | ✓ | ✓ | | | ✓ | ✓ | ✓ | Ø 16mm |
| 18 | **33792** | 444200 | | ✓ | ✓ | ✓ | | | ✓ | ✓ | ✓ | Ø 16mm |

## OPEL VECTRA C

04/02→

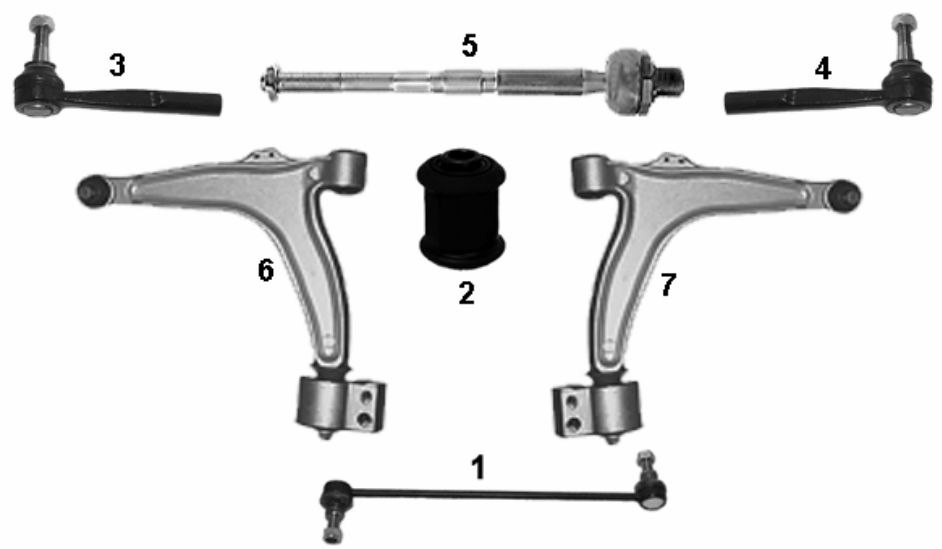


| NR | MAPCO | REF | | | ← | → | ↑ | ↓ | | | NEW | INFO |
|---|---|---|---|---|---|---|---|---|---|---|---|---|
| 1 | 49749 | 0350603 | ✓ | | ✓ | ✓ | | | ✓ | ✓ | | |
| 2 | 33788 | 352323 | ✓ | | ✓ | ✓ | | | ✓ | ✓ | | |
| 3 | 49620 | 160 3227 | ✓ | | ✓ | | | | ✓ | ✓ | ✓ | M14x1,5 |
| 4 | 49621 | 160 3228 | ✓ | | | ✓ | | | ✓ | ✓ | ✓ | M14x1,5 |
| 5 | 49622 | 160 3229 | ✓ | | ✓ | ✓ | | | ✓ | ✓ | ✓ | M14x1,5 283 mm |
| 6 | 49623 | 352051 | ✓ | | ✓ | | | | ✓ | ✓ | ✓ | |
| 7 | 49624 | 352052 | ✓ | | | ✓ | | | ✓ | ✓ | ✓ | |

## OPEL VIVARO

08/01→

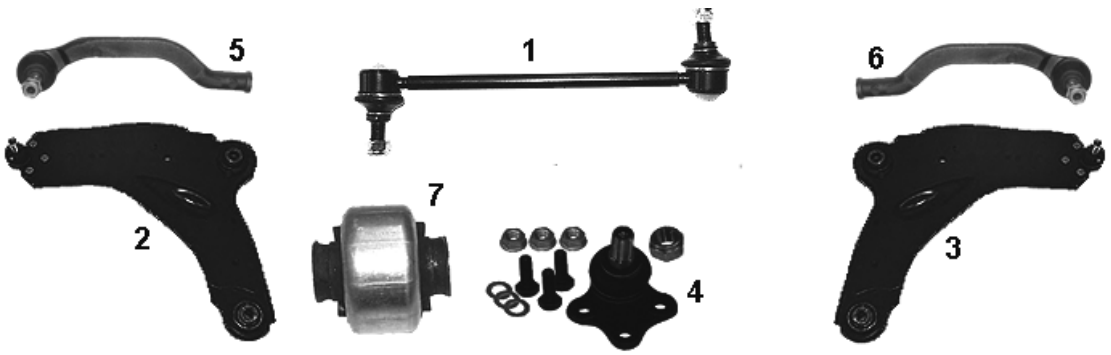


| NR | MAPCO | REF | | | ← | → | ↑ | ↓ | | | NEW | INFO |
|---|---|---|---|---|---|---|---|---|---|---|---|---|
| 1 | 49118HPS | 4408 904 | ✓ | | ✓ | ✓ | | | ✓ | ✓ | | |
| 2 | 49141 | 4408 958 | ✓ | | ✓ | | | ✓ | ✓ | ✓ | | |
| 3 | 49142 | 4408 959 | ✓ | | | ✓ | | ✓ | ✓ | ✓ | | |
| 4 | 49140 | 4412 934 | ✓ | | ✓ | ✓ | | ✓ | ✓ | ✓ | | |
| 5 | 49143 | 4408 510 | ✓ | | ✓ | | | | ✓ | ✓ | | |
| 6 | 49144 | 4408 511 | ✓ | | | ✓ | | | ✓ | ✓ | | |
| 7 | 33122 | 4408 958 | ✓ | | ✓ | ✓ | | | ✓ | ✓ | ✓ | |

## OPEL ZAFIRA 04/99→

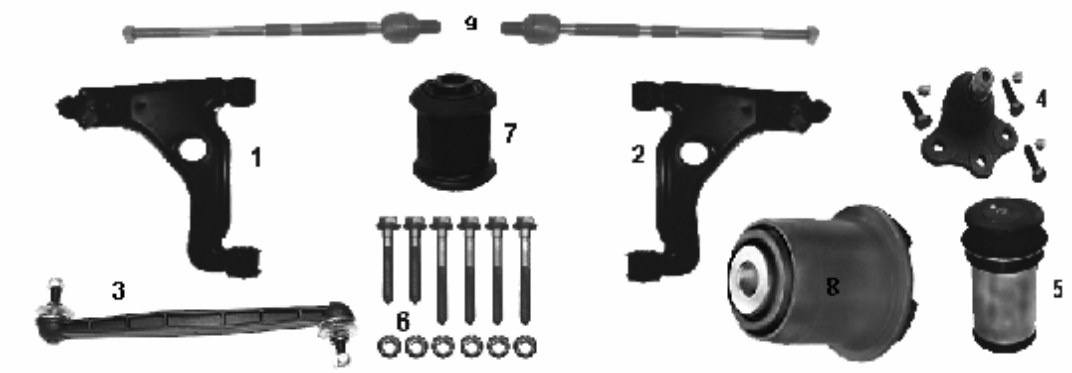


| NR | MAPCO | REF | | | ← | → | ↑ | ↓ | | | NEW | INFO |
|---|---|---|---|---|---|---|---|---|---|---|---|---|
| 1 | **19633** | 5352016 | ✓ | | ✓ | | | | ✓ | ✓ | | |
| 2 | **19634** | 5352017 | ✓ | | | ✓ | | | ✓ | ✓ | | |
| 3 | **19639** | 350 611 | ✓ | | ✓ | ✓ | | | ✓ | ✓ | | |
| 4 | **19621** | 352830 | ✓ | | ✓ | ✓ | | | ✓ | ✓ | | |
| 5 | **33767** | 402 644 | | ✓ | ✓ | ✓ | | | ✓ | ✓ | | |
| 6 | **95633** | | ✓ | | ✓ | ✓ | | | ✓ | ✓ | | MS |
| 7 | **33788** | 352323 | ✓ | | ✓ | ✓ | | | ✓ | ✓ | | |
| 8 | **33794** | 352365 | ✓ | | ✓ | ✓ | | | ✓ | ✓ | | Ø 12mm |
| 9 | **49607** | 1603213 | ✓ | | ✓ | ✓ | | | ✓ | ✓ | | |

**VERGLEICHSNUMMERN DIENEN NUR ZUR BESSEREN IDENTIFIKATION UND DÜRFEN NICHT AUF RECHNUNGEN ERSCHEINEN!!!**
**Reference numbers are used for better identification only !**
**Références d'origine pour meilleure identification seulement !**

# PEUGEOT

| | |
|---|---|
| **PEUGEOT 106 I** | **09/91→ 04/96** |
| **PEUGEOT 106 II** | **05/96→** |

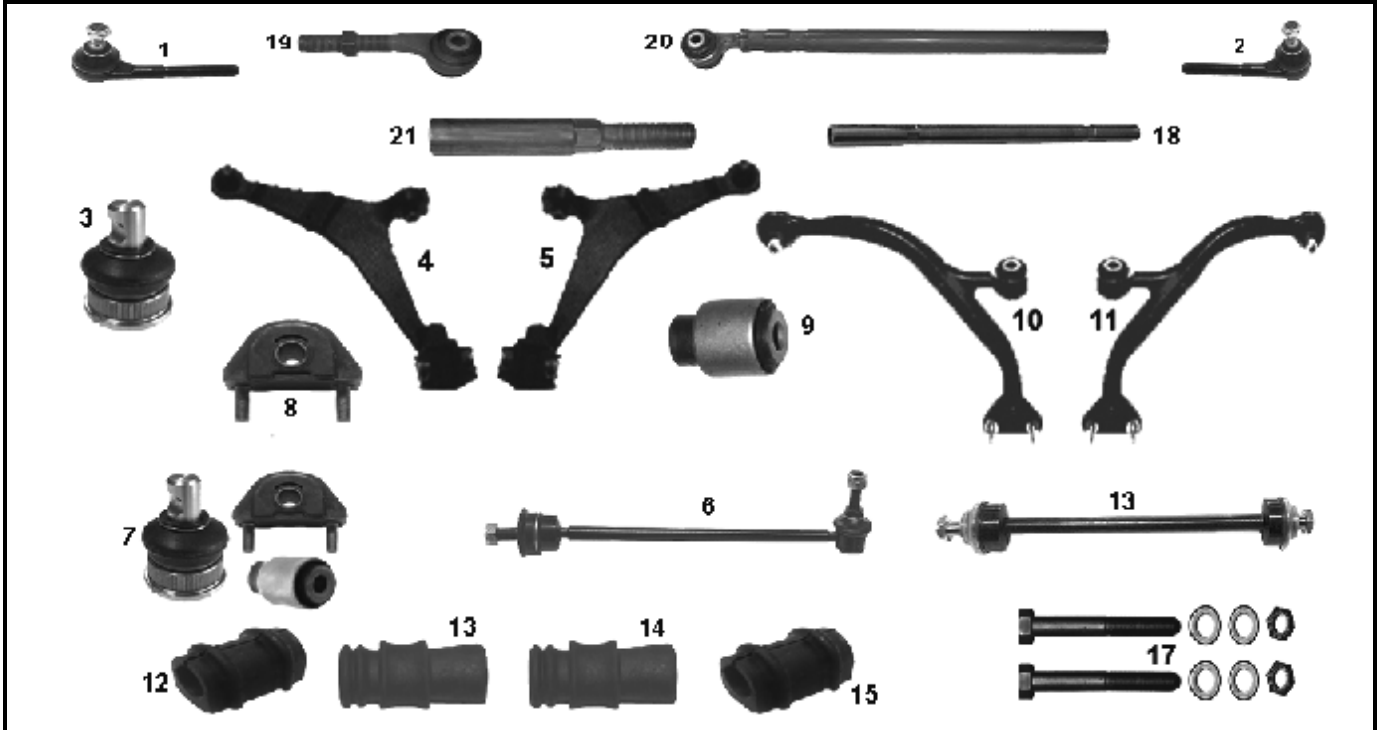


| NR | MAPCO | REF | | | ← | → | ↑ | ↓ | | | NEW | INFO |
|---|---|---|---|---|---|---|---|---|---|---|---|---|
| 1 | 19417 | 3817.41 | ✓ | | ✓ | | | | ✓ | ✓ | | M14x1,5RHT |
| 2 | 19418 | 3817.42 | ✓ | | | ✓ | | | ✓ | ✓ | | M14x1,5RHT |
| 3 | 19428 | 3640.36 | ✓ | | ✓ | ✓ | | | ✓ | ✓ | | Ø 16 mm |
| 4 | 19321 | 3520.78 | ✓ | | ✓ | | | | ✓ | ✓ | | STOP 1.6 Ø 16 mm |
| 5 | 19322 | 3520.79 | ✓ | | | ✓ | | | ✓ | ✓ | | STOP 1.6 Ø 16 mm |
| 6 | 19338HPS | 5087.40 | ✓ | | ✓ | ✓ | | | ✓ | ✓ | | |
| 7 | 19228 | | ✓ | | ✓ | ✓ | | | ✓ | ✓ | | Kit |
| 8 | 33313 | 3523.51 | ✓ | | ✓ | ✓ | | | ✓ | ✓ | | |
| 9 | 33314 | 3523.50 | ✓ | | ✓ | ✓ | | | ✓ | ✓ | | |
| 10 | 19360 | 3520.80 | ✓ | | ✓ | | | | ✓ | ✓ | | ✓ 1.6 |
| 11 | 19361 | 3520.81 | ✓ | | | ✓ | | | ✓ | ✓ | | ✓ 1.6 |
| 12 | 33323 | 5094.57 | ✓ | | ✓ | ✓ | | | ✓ | ✓ | | Ø 21mm 1991 → |
| 13 | 33324 | 5094.59 | ✓ | | ✓ | ✓ | | | ✓ | ✓ | | Ø 19mm 1991 → |
| 14 | 33325 | 5094.60 | ✓ | | ✓ | ✓ | | | ✓ | ✓ | | Ø 20mm 1991 → |
| 15 | 33420 | 5094.56 | ✓ | | ✓ | ✓ | | | ✓ | ✓ | | Ø 19mm 1991 → |
| 16 | 19476 | 5087.33 | ✓ | | ✓ | ✓ | | | ✓ | ✓ | | →04/96 300 mm |
| 17 | 95321 | | ✓ | | ✓ | ✓ | | | ✓ | ✓ | | MS |
| 18 | 19480 | 3812.A0 | ✓ | | ✓ | ✓ | | | ✓ | ✓ | | M14x1,5 |
| 19 | 19481 | 3817.32 | ✓ | | ✓ | | | | | ✓ | | M14x1,5LHT |
| 20 | 19482 | 3817.35 | ✓ | | | ✓ | | | | ✓ | | M14x1,5LHT |
| 21 | 19483 | 3817.34 | ✓ | | ✓ | ✓ | | | | ✓ | | 12,0mm, M14x1,5RHT, L= 132,0mm |
| 22 | 36402 | | ✓ | | ✓ | ✓ | | | ✓ | ✓ | | 22 |

## PEUGEOT 1007 — 04/05→

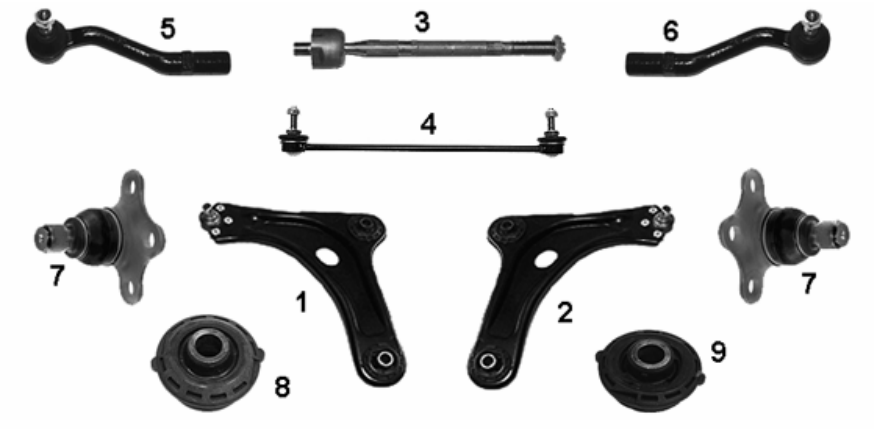


| NR | MAPCO | REF | | | ← | → | ↑ | ↓ | | | NEW | INFO |
|---|---|---|---|---|---|---|---|---|---|---|---|---|
| 1 | 19385 | 3520.L9 | ✓ | | ✓ | | | | ✓ | ✓ | | |
| 2 | 19386 | 3521.J1 | ✓ | | | ✓ | | | ✓ | ✓ | | |
| 3 | 19479 | 3812.E1 | ✓ | | ✓ | ✓ | | | ✓ | ✓ | | |
| 4 | 19348HPS | 5087.45 | ✓ | | ✓ | ✓ | | | ✓ | ✓ | | |
| 5 | 19489 | 3817.55 | ✓ | | ✓ | | | | ✓ | ✓ | ✓ | |
| 6 | 19490 | 3817.56 | ✓ | | | ✓ | | | ✓ | ✓ | ✓ | |
| 7 | 19491 | 3640.56 | ✓ | | ✓ | ✓ | | | ✓ | ✓ | ✓ | |
| 8 | 33334 | 3523.AA | ✓ | | ✓ | ✓ | | | ✓ | ✓ | ✓ | Ø 55,2mm |
| 9 | 33335 | 3523.98 | ✓ | | ✓ | ✓ | | | ✓ | ✓ | ✓ | Ø 55,5mm |

## PEUGEOT 107 — 06/05→

| NR | MAPCO | REF | | | ← | → | ↑ | ↓ | | | NEW | INFO |
|---|---|---|---|---|---|---|---|---|---|---|---|---|
| 4 | 19348HPS | 5087.45 | ✓ | | ✓ | ✓ | | | ✓ | ✓ | | |

## PEUGEOT 205 STOP GTi, Rallye, TD — 08/83 → 12/99

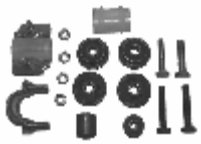

| NR | MAPCO | REF | | | ← | → | ↑ | ↓ | | | NEW | INFO |
|---|---|---|---|---|---|---|---|---|---|---|---|---|
| 1 | 36403 | | ✓ | | ✓ | ✓ | | | ✓ | ✓ | | |
| 2 | 36305 | | ✓ | | ✓ | ✓ | | | ✓ | ✓ | | |
| 3 | 36304 | | ✓ | | ✓ | ✓ | | | ✓ | ✓ | | |

## PEUGEOT 205 ✓ GTi, Rallye, TD — 08/83 → 12/99

| NR | MAPCO | REF | | | ← | → | ↑ | ↓ | | | NEW | INFO |
|---|---|---|---|---|---|---|---|---|---|---|---|---|
| 1 | 36310 | | ✓ | | ✓ | ✓ | | | ✓ | ✓ | | 1 |

## PEUGEOT 205 01/83→ 09/98

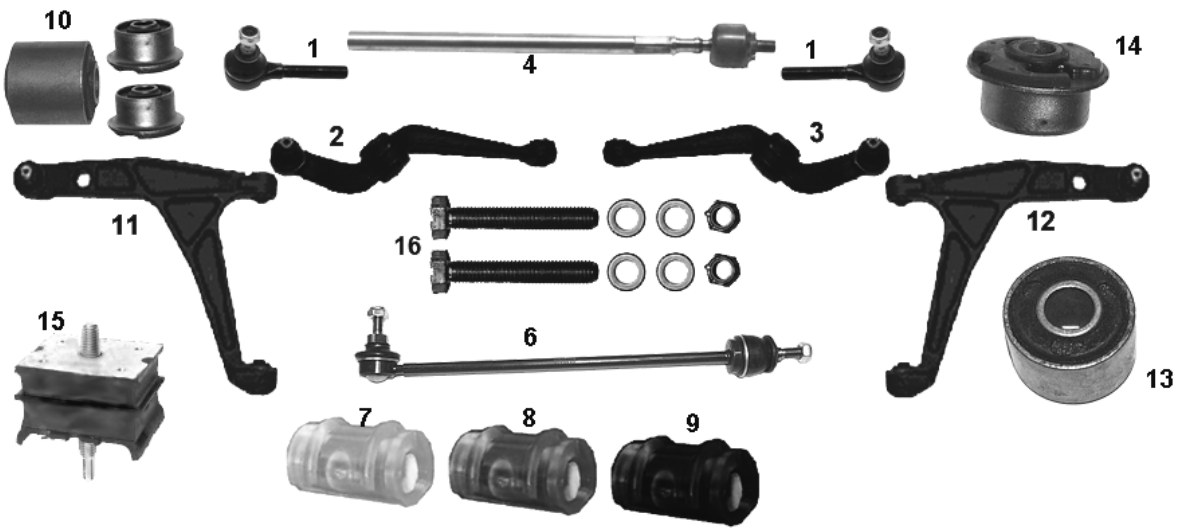


| NR | MAPCO | REF | | | ← | → | ↑ | ↓ | | | NEW | INFO |
|---|---|---|---|---|---|---|---|---|---|---|---|---|
| 1 | 19301 | 3817.18 | ✓ | | ✓ | ✓ | | | ✓ | ✓ | | M14x1,5RHT |
| 2 | 19310 | 3520.51 | ✓ | | ✓ | | | | ✓ | ✓ | | Gti |
| 3 | 19311 | 3521.34 | ✓ | | | ✓ | | | ✓ | ✓ | | Gti |
| 4 | 19410 | 3812.95 | ✓ | | ✓ | ✓ | | | ✓ | ✓ | | M14x1,5 RHT L= 314 mm |
| 5 | 19335 | 3812.32 | ✓ | | ✓ | ✓ | | | ✓ | ✓ | | 1 + 4 |
| 6 | 19339HPS | 5087.32 | ✓ | | ✓ | ✓ | | | ✓ | ✓ | | ✓ Gti |
| 7 | 33311 | 5094.36 | ✓ | | ✓ | ✓ | | | ✓ | ✓ | | Ø20mm |
| 8 | 33311/1 | 5094.37 | ✓ | | ✓ | ✓ | | | ✓ | ✓ | | Ø22mm |
| 9 | 33311/2 | 5094.40 | ✓ | | ✓ | ✓ | | | ✓ | ✓ | | Ø23mm |
| 10 | 19206 | | ✓ | | ✓ | ✓ | | | ✓ | ✓ | | Kit |
| 11 | 19349 | 3520.55 | ✓ | | ✓ | | | | ✓ | ✓ | | ✓ Gti |
| 12 | 19350 | 3521.38 | ✓ | | | ✓ | | | ✓ | ✓ | | ✓ Gti |
| 13 | 33307 | 3523.20 | ✓ | | ✓ | ✓ | | | ✓ | ✓ | | |
| 14 | 33306 | 3523.49 | ✓ | | ✓ | ✓ | | | ✓ | ✓ | | Ø28mm |
| 15 | 33327 | 5151.10 | | ✓ | ✓ | ✓ | | | ✓ | ✓ | | |
| 16 | 95310 | | ✓ | | ✓ | ✓ | | | ✓ | ✓ | | Gti MS |
| | | | | | | | | | | | | |

## PEUGEOT 206 (A/C) 09/98→

| NR | MAPCO | REF | | | ← | → | ↑ | ↓ | | | NEW | INFO |
|---|---|---|---|---|---|---|---|---|---|---|---|---|
| 1 | **19417** | 3817.41 | ✓ | | ✓ | | | | ✓ | ✓ | | M14x1.5 RHT |
| 2 | **19418** | 3817.42 | ✓ | | | ✓ | | | ✓ | ✓ | | M14x1.5 RHT |
| 3 | **19346** | 3520.G8 | ✓ | | ✓ | | | | ✓ | ✓ | | 1.4 16V, 1.6 HDi **Chassis → 09440** |
| 4 | **19347** | 3521.C8 | ✓ | | | ✓ | | | ✓ | ✓ | | 1.4 16V, 1.6 HDi **Chassis → 09440** |
| 5 | **19348HPS** | 5087.45 | ✓ | | ✓ | ✓ | | | ✓ | ✓ | | |
| 6 | **33316** | 3523.76 | ✓ | | ✓ | ✓ | | | ✓ | ✓ | | STOP 1.4 16V, 1.6 HDi |
| 7 | **33317** | 3523.77 | ✓ | | ✓ | ✓ | | | ✓ | ✓ | | STOP 1.6 16V, 2.0 16V, 1.6 HDi |
| 8 | **19373** | 3812.C5 | ✓ | | ✓ | ✓ | | | ✓ | ✓ | | M14 x1,5RHT |
| 9 | **33303** | 5131.94 | | ✓ | ✓ | ✓ | | | ✓ | ✓ | | |
| 10 | **19398** | 3520.L7 | ✓ | | ✓ | | | | ✓ | ✓ | | 1.4 16V, 1.6 HDi **Chassis 09441 →** |
| 11 | **19399** | 3521.H9 | ✓ | | | ✓ | | | ✓ | ✓ | | 1.4 16V, 1.6 HDi **Chassis 09441 →** |
| 12 | **33315** | 3523.80 | ✓ | | ✓ | ✓ | | | ✓ | ✓ | ✓ | 1.6 16V, 2.0 16V, 1.6 HDi |
| 13 | **33340** | 3523.AG | ✓ | | ✓ | ✓ | | | ✓ | ✓ | ✓ | 1.4 16V, 1.6 HDi |

## PEUGEOT 206 CC 09/00→
## PEUGEOT 206 SW 07/02→

| NR | MAPCO | REF | | | ← | → | ↑ | ↓ | | | NEW | INFO |
|---|---|---|---|---|---|---|---|---|---|---|---|---|
| 1 | **33303** | 5131.94 | | ✓ | ✓ | ✓ | | | ✓ | ✓ | | |
| 2 | **49301** | 3520.P2 | ✓ | | ✓ | | | | ✓ | ✓ | ✓ | ✓ CC |
| 3 | **49302** | 3521.K2 | ✓ | | | ✓ | | | ✓ | ✓ | ✓ | ✓ CC |

## PEUGEOT 305 — 1977→ 10/82

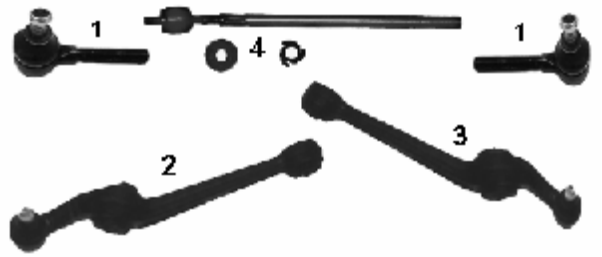


| NR | MAPCO | REF | | | ← | → | ↑ | ↓ | | | NEW | INFO |
|---|---|---|---|---|---|---|---|---|---|---|---|---|
| 1 | 19301 | 3817.50 | ✓ | | ✓ | ✓ | | | ✓ | ✓ | | M14 x 1,5 RHT |
| 2 | 19351 | 3520.37 | ✓ | | ✓ | | | | ✓ | ✓ | | |
| 3 | 19352 | 3521.26 | ✓ | | | ✓ | | | ✓ | ✓ | | |
| 4 | 19323 | 3812.25 | ✓ | | ✓ | ✓ | | | ✓ | ✓ | | M14x1,50RHT L= 262,0 mm |

## PEUGEOT 305 1.6-1.5 — 10/82→ 07/88

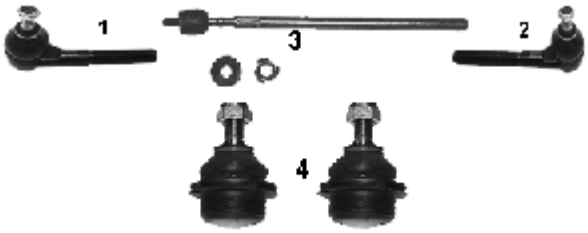


| NR | MAPCO | REF | | | ← | → | ↑ | ↓ | | | NEW | INFO |
|---|---|---|---|---|---|---|---|---|---|---|---|---|
| 1 | 19417 | 3817.41 | ✓ | | ✓ | | | | | ✓ | | M14 x 1,5 RHT |
| 2 | 19418 | 3817.42 | ✓ | | | ✓ | | | | ✓ | | M14 x 1,5 RHT |
| 3 | 19340 | 3812.52 | | | ✓ | ✓ | | | | ✓ | | |
| 4 | 19312 | 3640.21 | ✓ | | ✓ | ✓ | | ✓ | | ✓ | | |

## PEUGEOT 305 1.6-1.9 — 10/82→ 07/88

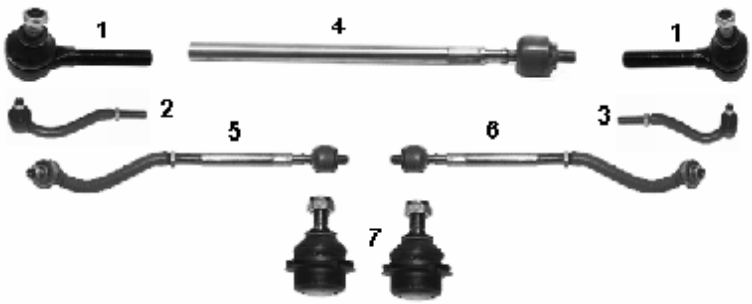


| NR | MAPCO | REF | | | ← | → | ↑ | ↓ | | | NEW | INFO |
|---|---|---|---|---|---|---|---|---|---|---|---|---|
| 1 | 19301 | 3817.50 | ✓ | | ✓ | ✓ | | | ✓ | | | Chassis →9370001 M14 x 1,5 RHT |
| 2 | 19315 | 3817.26 | ✓ | | ✓ | | | | ✓ | | | Chassis 9370002→ |
| 3 | 19316 | 3817.27 | ✓ | | | ✓ | | | ✓ | | | Chassis 9370002→ |
| 4 | 19410 | 3812.95 | ✓ | | ✓ | ✓ | | | ✓ | | | M14x1,5 RHT L= 314 mm |
| 5 | 19324/1 | | ✓ | | ✓ | | | | ✓ | | | **2 + 4** |
| 6 | 19325/1 | | ✓ | | | ✓ | | | ✓ | | | **3 + 4** |
| 7 | 19312 | 3640.21 | ✓ | | ✓ | ✓ | | | ✓ | | | |

## PEUGEOT 306

05/93→04/02

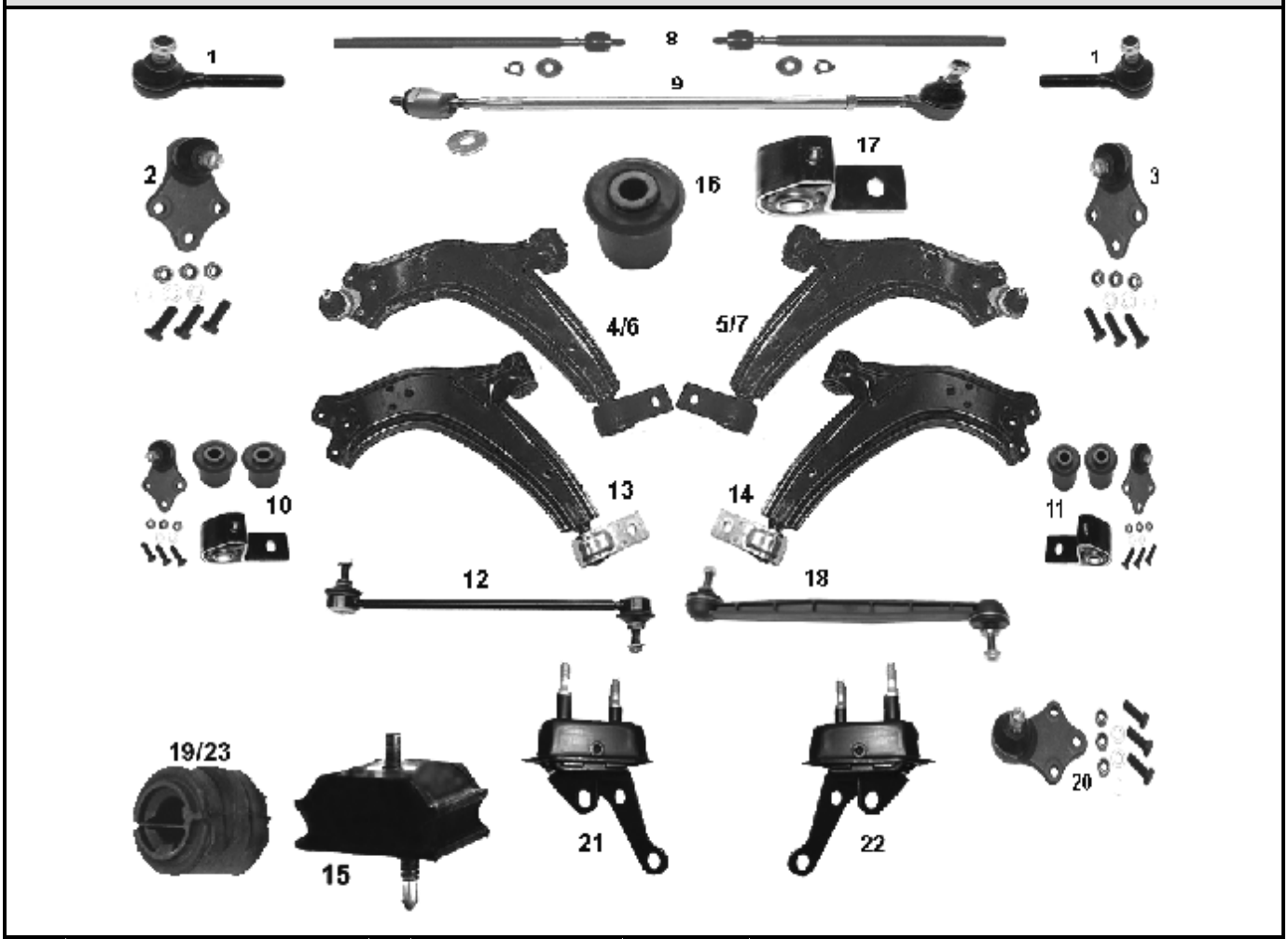


| NR | MAPCO | REF | | | ← | → | ↑ | ↓ | | | NEW | INFO |
|---|---|---|---|---|---|---|---|---|---|---|---|---|
| 1 | **19301** | 3817.50 | ✓ | | ✓ | ✓ | | | ✓ | ✓ | | |
| 2 | **19319** | 3640.44 | ✓ | | ✓ | ✓ | | | | ✓ | | 1993-1998 |
| 3 | **19320** | 3640.30 | ✓ | | ✓ | ✓ | | | ✓ | | | 1993-1998 |
| 4 | **19331** | 3520.F1 | ✓ | | ✓ | | | | | ✓ | | 1993-1998 |
| 5 | **19332** | 3521.99 | ✓ | | | ✓ | | | | ✓ | | 1993-1998 |
| 6 | **19333** | 3520.84 | ✓ | | ✓ | | | | ✓ | | | 1993-1998 |
| 7 | **19334** | 3521.56 | ✓ | | | ✓ | | | ✓ | | | 1993-1998 |
| 8 | **19336/1** | 3812.92 | ✓ | | ✓ | ✓ | | | ✓ | ✓ | | |
| 9 | **19336** | | ✓ | | ✓ | ✓ | | | ✓ | ✓ | | **1+8** |
| 10 | **19219** | | ✓ | | ✓ | ✓ | | | | ✓ | | Kit 1993-1998 |
| 11 | **19220** | | ✓ | | ✓ | ✓ | | | ✓ | | | Kit 1993-1998 |
| 12 | **19337HPS** | 5087.46 | ✓ | | ✓ | ✓ | | | ✓ | ✓ | | **Stahl/steel** |
| 13 | **19331/1** | 3520.H3 | ✓ | | ✓ | | | | ✓ | ✓ | | |
| 14 | **19332/1** | 3521.E3 | ✓ | | | ✓ | | | ✓ | ✓ | | |
| 15 | **33321** | 5131.71 | | ✓ | ✓ | ✓ | | | ✓ | ✓ | | |
| 16 | **33416** | 3523.62 | ✓ | | ✓ | ✓ | | | ✓ | ✓ | | |
| 17 | **33417** | 3523.59 | ✓ | | ✓ | ✓ | | | ✓ | ✓ | | |
| 18 | **19367** | 5087.42 | ✓ | | ✓ | ✓ | | | ✓ | ✓ | | **Kunststoff** |
| 19 | **33424** | 5094.65 | ✓ | | ✓ | ✓ | | | ✓ | ✓ | | **Ø 21,0 mm** |
| 20 | **19371** | 3640.48 | ✓ | | ✓ | ✓ | | | ✓ | ✓ | | 1.9D, 2.0 HDI 08/99→ **Ø 18,0mm** |
| 21 | **33329** | 5131.69 | | ✓ | ✓ | | | | ✓ | ✓ | | |
| 22 | **33330** | 5131.70 | | ✓ | | ✓ | | | ✓ | ✓ | | |
| 23 | **33337** | 5094.64 | ✓ | | ✓ | ✓ | | | ✓ | ✓ | | **Ø 18,0mm** |

## PEUGEOT 306 Chassis → 7969 05/93 → 07/99

1

2

3

| NR | MAPCO | REF | | | ← | → | ↑ | ↓ | | | NEW | INFO |
|---|---|---|---|---|---|---|---|---|---|---|---|---|
| 1 | 36406 | | ✓ | | ✓ | ✓ | | | ✓ | ✓ | | |
| 2 | 36400 | | ✓ | | ✓ | ✓ | | | ✓ | ✓ | | |
| 3 | 36401 | | ✓ | | ✓ | ✓ | | | ✓ | ✓ | | |

## PEUGEOT 307 08/00 →

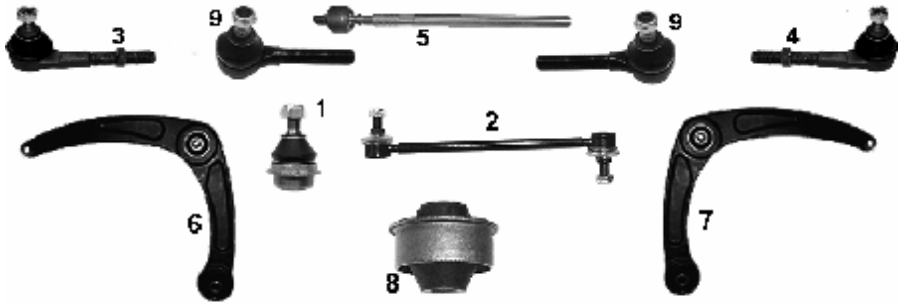


| NR | MAPCO | REF | | | ← | → | ↑ | ↓ | | | NEW | INFO |
|---|---|---|---|---|---|---|---|---|---|---|---|---|
| 1 | 19372 | 3640.53 | ✓ | | ✓ | ✓ | | | ✓ | ✓ | | |
| 2 | 19375HPS | 5087.50 | ✓ | | ✓ | ✓ | | | ✓ | ✓ | | |
| 3 | 19417 | 3817.41 | ✓ | | ✓ | | | | ✓ | ✓ | | |
| 4 | 19418 | 3817.42 | ✓ | | | ✓ | | | ✓ | ✓ | | |
| 5 | 19379 | 3812.E0 | ✓ | | ✓ | ✓ | | | ✓ | ✓ | | |
| 6 | 19383 | 3520.K8 | ✓ | | ✓ | | | | ✓ | ✓ | | 18,0 mm |
| 7 | 19384 | 3521.G8 | ✓ | | | ✓ | | | ✓ | ✓ | | 18,0 mm |
| 8 | 33336 | 3523.92 | ✓ | | ✓ | ✓ | | | ✓ | ✓ | | |

## PEUGEOT 309 10/85 → 12/93

1

2

3

| NR | MAPCO | REF | | | ← | → | ↑ | ↓ | | | NEW | INFO |
|---|---|---|---|---|---|---|---|---|---|---|---|---|
| 1 | 36306 | | ✓ | | ✓ | ✓ | | | ✓ | ✓ | | |
| 2 | 36307 | | ✓ | | ✓ | ✓ | | | ✓ | ✓ | | |
| 3 | 36300 | | ✓ | | ✓ | ✓ | | | ✓ | ✓ | | |

## PEUGEOT 309 I + II 10/85→12/93

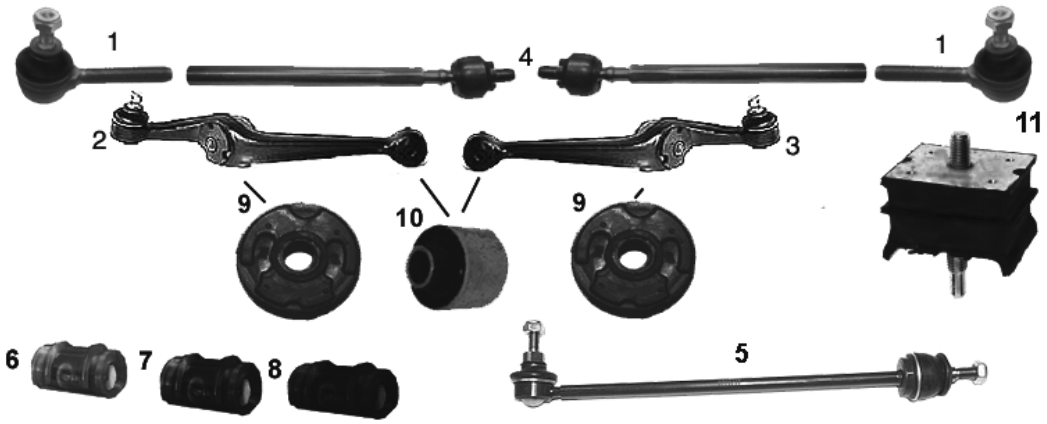


| NR | MAPCO | REF | | | ← | → | ↑ | ↓ | | | NEW | INFO |
|---|---|---|---|---|---|---|---|---|---|---|---|---|
| 1 | 19301 | 3817.50 | ✓ | | ✓ | ✓ | | | ✓ | ✓ | | M14x1,5RHT |
| 2 | 19313 | 3520.57 | ✓ | | ✓ | | | | ✓ | ✓ | | STOP 1.9 GTI Chassis→2108017 |
| 2 | 19317 | 3520.60 | ✓ | | ✓ | | | | ✓ | ✓ | | STOP 1.9 GTI Chassis 2108018→ |
| 3 | 19314 | 3521.38 | ✓ | | | ✓ | | | ✓ | ✓ | | STOP 1.9 GTI Chassis →2108017 |
| 3 | 19318 | 3521.41 | ✓ | | | ✓ | | | ✓ | ✓ | | STOP 1.9 GTI Chassis 2108018→ |
| 4 | 19410 | 3812.95 | ✓ | | ✓ | ✓ | | | ✓ | ✓ | | M14x1,5 RHT L= 314 mm |
| 4a | 19340/1 | 3812.97 | ✓ | | ✓ | ✓ | | | ✓ | ✓ | | 1+4 |
| 5 | 19339HPS | 5087.32 | ✓ | | ✓ | ✓ | | | ✓ | ✓ | | ✓ Gti |
| 6 | 33311 | 5094.36 | ✓ | | ✓ | ✓ | | | ✓ | ✓ | | Ø20mm |
| 7 | 33311/1 | 5094.37 | ✓ | | ✓ | ✓ | | | ✓ | ✓ | | Ø22mm |
| 8 | 33311/2 | 5094.40 | ✓ | | ✓ | ✓ | | | ✓ | ✓ | | Ø23mm |
| 9 | 33306 | 3523.35 | ✓ | | ✓ | ✓ | | | ✓ | ✓ | | |
| 10 | 33307 | 3523.20 | ✓ | | ✓ | ✓ | | | ✓ | ✓ | | |
| 11 | 33327 | 5151.10 | | ✓ | ✓ | ✓ | ✓ | | ✓ | ✓ | | |
| | | | | | | | | | | | | |

## PEUGEOT 405 STOP 1.9, 2.0, Mi16, 4x4 01/87 → 10/96

1

2

3

| NR | MAPCO | REF | | | ← | → | ↑ | ↓ | | | NEW | INFO |
|---|---|---|---|---|---|---|---|---|---|---|---|---|
| 1 | 36301 | | ✓ | | ✓ | ✓ | | | ✓ | ✓ | | |
| 2 | 36302 | | ✓ | | ✓ | ✓ | | | ✓ | ✓ | | |
| 3 | 36303 | | ✓ | | ✓ | ✓ | | | ✓ | ✓ | | |

## PEUGEOT 405 — 01/87→10/96

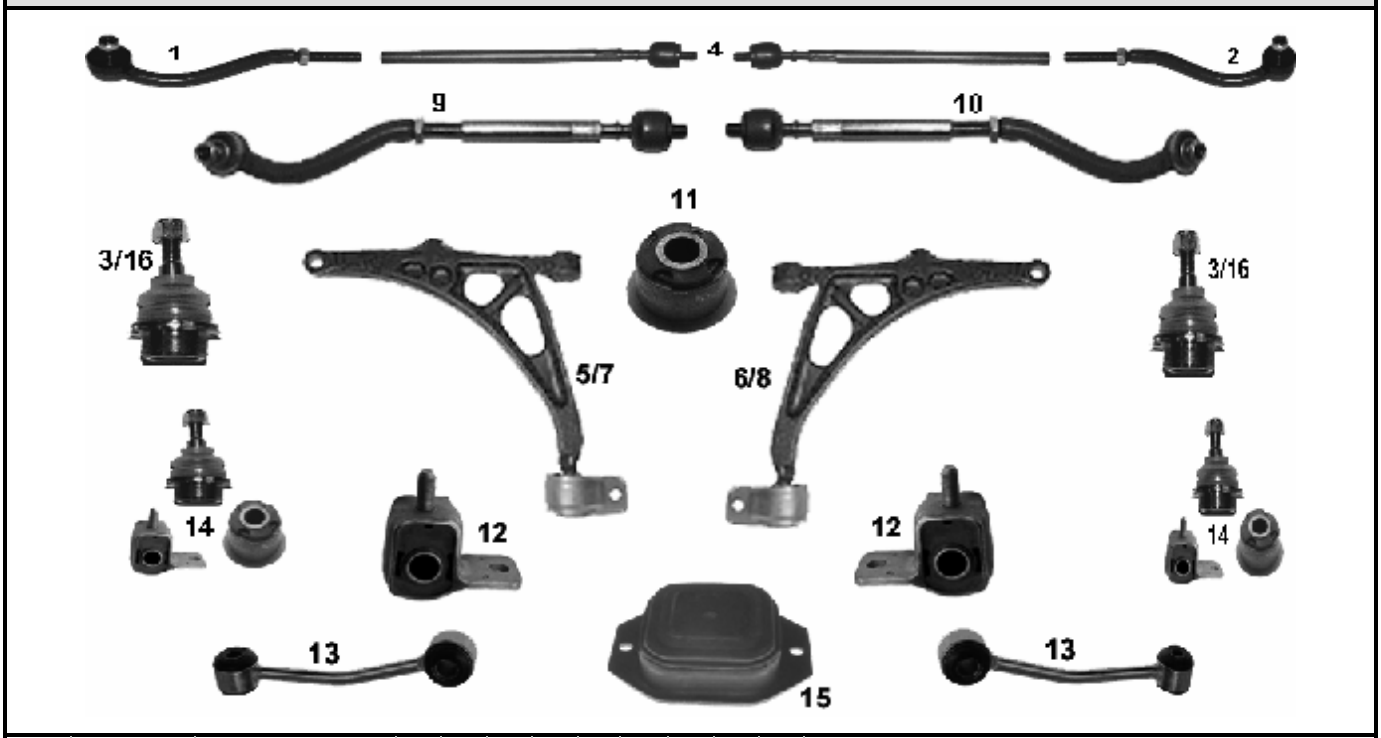


| NR | MAPCO | REF | | | ← | → | ↑ | ↓ | | | NEW | INFO |
|---|---|---|---|---|---|---|---|---|---|---|---|---|
| 1 | 19315 | 3817.48 | ✓ | | ✓ | | | | ✓ | ✓ | | M14x1,5RHT |
| 2 | 19316 | 3817.49 | ✓ | | | ✓ | | | ✓ | ✓ | | M14x1,5RHT |
| 3 | 19312 | 3640.22 | ✓ | | ✓ | | | | ✓ | ✓ | | Chassis→ 71358279 |
| 4 | 19324 | 3812.98 | ✓ | | ✓ | ✓ | | | ✓ | ✓ | | |
| 5 | 19327 | 3520.K5 | ✓ | | ✓ | | | | ✓ | ✓ | | Chassis→ 71358279 |
| 6 | 19328 | 3521.G5 | ✓ | | | ✓ | | | ✓ | ✓ | | Chassis→ 71358279 |
| 7 | 19329 | 3520.K4 | ✓ | | ✓ | | | | ✓ | ✓ | | Chassis 71358280→ |
| 8 | 19330 | 3521.G4 | ✓ | | | ✓ | | | ✓ | ✓ | | Chassis 71358280→ |
| 9 | 19325 | 3812.72 | ✓ | | ✓ | | | | ✓ | ✓ | | **1+4** |
| 10 | 19326 | 3812.77 | ✓ | | | ✓ | | | ✓ | ✓ | | **2+4** |
| 11 | 33320 | 3523.40 | ✓ | | ✓ | ✓ | | | ✓ | ✓ | | |
| 12 | 33322 | 3523.54 | ✓ | | ✓ | ✓ | | | ✓ | ✓ | | |
| 13 | 19364 | 5087.27 | ✓ | | ✓ | ✓ | | | ✓ | ✓ | | |
| 14 | 19222 | | ✓ | | ✓ | ✓ | | | ✓ | ✓ | | Kit |
| 15 | 33326 | 5151.24 | | ✓ | ✓ | ✓ | | | ✓ | ✓ | | STOP 4x4 |
| 16 | 19425 | 3640.34 | ✓ | | ✓ | ✓ | | | ✓ | ✓ | | Chassis 71358280→ |

## PEUGEOT 406 — 11/95 → 04/99

| NR | MAPCO | REF | | | ← | → | ↑ | ↓ | | | NEW | INFO |
|---|---|---|---|---|---|---|---|---|---|---|---|---|
| 1 | 36308 | | ✓ | | ✓ | | | | ✓ | ✓ | | ✓ **1.8** 11/95→ 04/99 |
| 2 | 36309 | | ✓ | | | ✓ | | | ✓ | ✓ | | STOP **1.8** 11/95→ 04/99 |

## PEUGEOT 406 10/95→

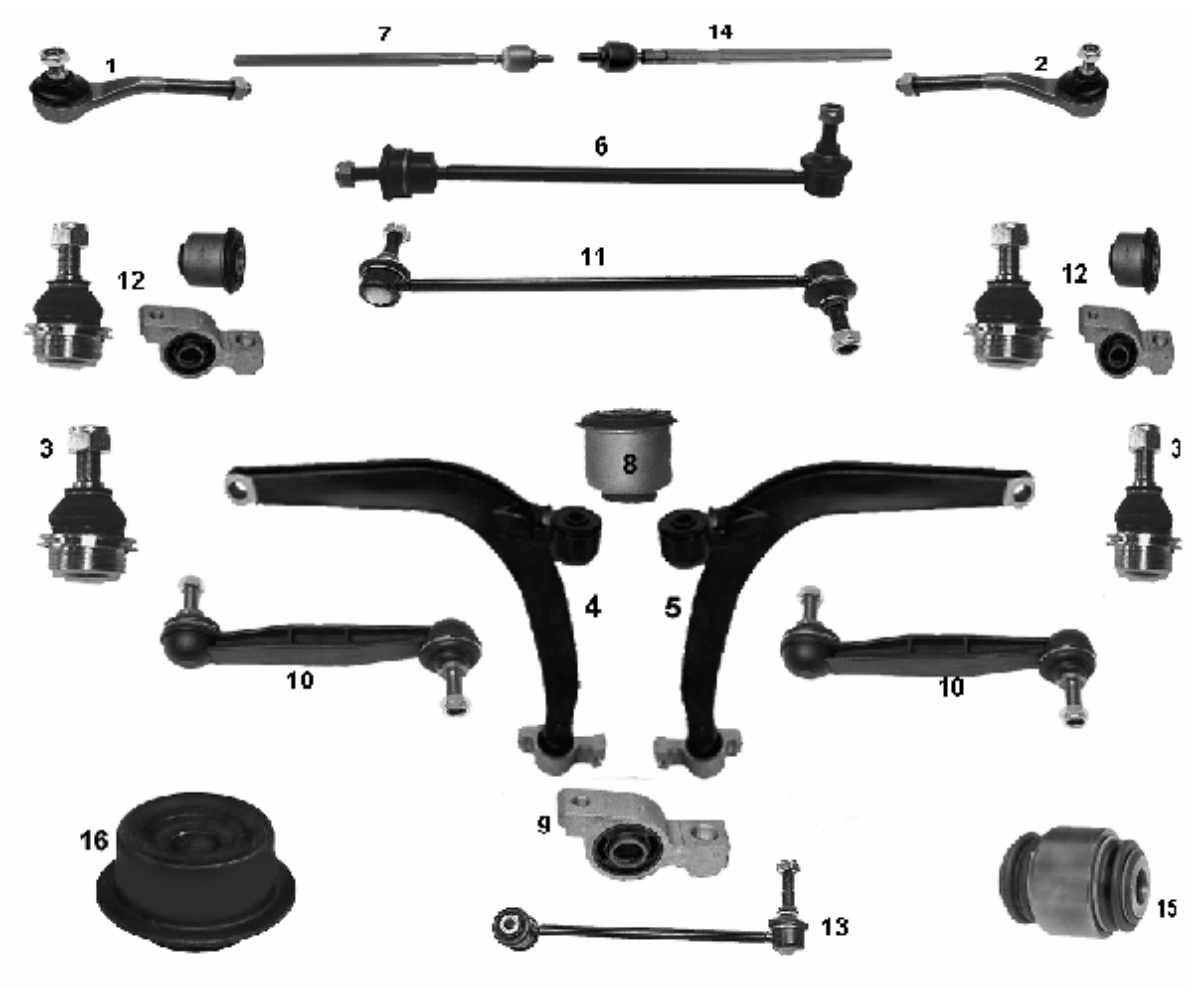


| NR | MAPCO | REF | | | ← | → | ↑ | ↓ | | | NEW | INFO |
|---|---|---|---|---|---|---|---|---|---|---|---|---|
| 1 | **19341** | 3817.40 | ✓ | | ✓ | | | | ✓ | ✓ | | M16x1,5RHT |
| 2 | **19342** | 3817.39 | ✓ | | | ✓ | | | ✓ | ✓ | | M16x1,5RHT |
| 3 | **19425** | 3640.34 | ✓ | | ✓ | ✓ | | | ✓ | ✓ | | |
| 4 | **19344** | 3520.C0 | ✓ | | ✓ | | | | ✓ | ✓ | | |
| 5 | **19345** | 3521.80 | ✓ | | | ✓ | | | ✓ | ✓ | | |
| 6 | **19338HPS** | 5087.40 | ✓ | | ✓ | ✓ | | | ✓ | ✓ | | Chassis → 7664 |
| 7 | **19353** | 3812.A9 | ✓ | | ✓ | ✓ | | | ✓ | ✓ | | STOP 3.0 V6 Ø **22mm** |
| 8 | **33319** | 3523.60 | ✓ | | ✓ | ✓ | | | ✓ | ✓ | | |
| 9 | **33318** | 3523.61 | | ✓ | ✓ | ✓ | | | ✓ | ✓ | | |
| 10 | **19365** | 5178.38 | | ✓ | ✓ | ✓ | | | ✓ | ✓ | | |
| 11 | **19362HPS** | 5087.48 | ✓ | | ✓ | ✓ | | | ✓ | ✓ | | Chassis 7665→ |
| 12 | **19225** | | ✓ | | ✓ | ✓ | | | ✓ | ✓ | | Kit |
| 13 | **19368HPS** | 5178.39 | | ✓ | ✓ | ✓ | | | ✓ | ✓ | | |
| 14 | **19374** | 3812.C4 | ✓ | | ✓ | ✓ | | | ✓ | ✓ | | M16 x 1,5RHT Ø **20mm** |
| 15 | **33333** | 3640.35 | | ✓ | ✓ | ✓ | | | ✓ | ✓ | ✓ | Chassis -> O 07664 |
| 16 | **33338** | 5152.59 | | ✓ | ✓ | ✓ | | | ✓ | ✓ | ✓ | |

## PEUGEOT 407

05/04 →

| NR | MAPCO | REF | | | ← | → | ↑ | ↓ | | | NEW | INFO |
|---|---|---|---|---|---|---|---|---|---|---|---|---|
| 1 | **19392** | 3817.58 | ✓ | | ✓ | | | | ✓ | ✓ | ✓ | M14x1,5 |
| 2 | **19393** | 3817.57 | ✓ | | | ✓ | | | ✓ | ✓ | ✓ | M14x1,5 |
| 3 | **19395** | 3812.E3 | ✓ | | ✓ | ✓ | | | ✓ | ✓ | ✓ | **Axialgelenk / axial joint** M14x1,5 |
| 4 | **19394** | 3640.57 | ✓ | | ✓ | ✓ | | | ✓ | ✓ | ✓ | |
| 5 | **19396** | 5087.52 | ✓ | | ✓ | | | | ✓ | ✓ | ✓ | |
| 6 | **19397** | 5087.53 | ✓ | | | ✓ | | | ✓ | ✓ | ✓ | |

## PEUGEOT 504 - 505 - 604

1980→12/93

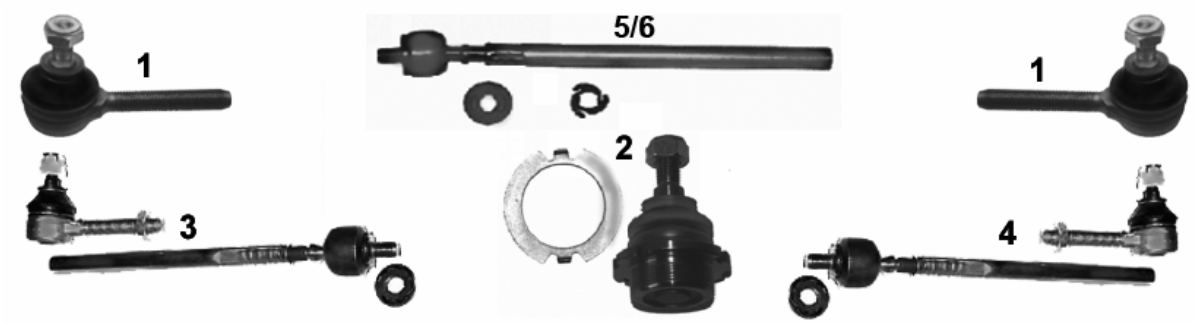


| NR | MAPCO | REF | | | ← | → | ↑ | ↓ | | | NEW | INFO |
|---|---|---|---|---|---|---|---|---|---|---|---|---|
| 1 | **19341** | 3817.50 | ✓ | | ✓ | ✓ | | | ✓ | ✓ | | M14x1,5RHT |
| 2 | **19307** | 3640.25 | ✓ | | ✓ | ✓ | | | ✓ | ✓ | | |
| 3 | **19354** | 3817.15 | ✓ | | ✓ | ✓ | | | | ✓ | | |
| 4 | **19355** | 3812.19 | ✓ | | ✓ | ✓ | | | ✓ | | | |
| 5 | **19355/1** | 3812.25 | ✓ | | ✓ | ✓ | | | ✓ | | | M14x1,50RHT L= 262,0 mm |
| 6 | **19354/1** | 3812.15 | ✓ | | ✓ | ✓ | | | | ✓ | | M14x1,50RHT L= 260,0 mm |

## PEUGEOT 605 (6B) 06/89→09/99

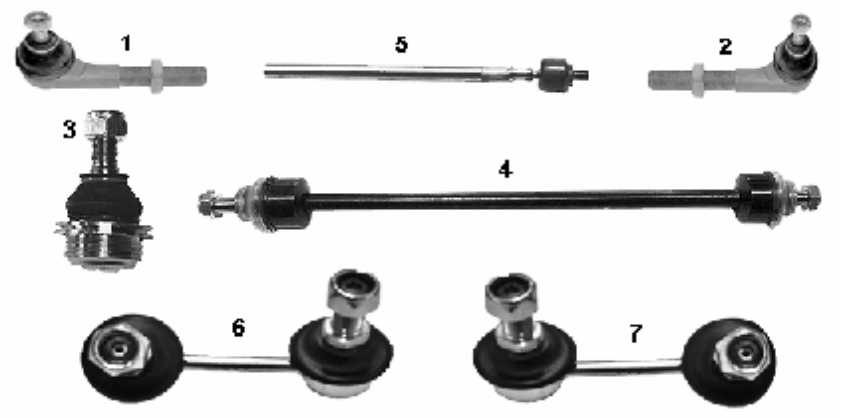


| NR | MAPCO | REF | | | ← | → | ↑ | ↓ | | | NEW | INFO |
|---|---|---|---|---|---|---|---|---|---|---|---|---|
| 1 | 19382 | 3817.43 | ✓ | | ✓ | | | | ✓ | ✓ | | M16x 1,5RHT |
| 2 | 19381 | 3817.44 | ✓ | | | ✓ | | | ✓ | ✓ | | M16x 1,5RHT |
| 3 | 19425 | 3640.34 | ✓ | | ✓ | ✓ | | | ✓ | ✓ | | |
| 4 | 19451HPS | 5087.41 | ✓ | | ✓ | ✓ | | | ✓ | ✓ | | |
| 5 | 19409 | 3812.99 | ✓ | | ✓ | ✓ | | | ✓ | ✓ | | |
| 6 | 19370 | 5178.30 | | ✓ | ✓ | | | | ✓ | ✓ | | |
| 7 | 19369 | 5178.31 | | ✓ | | ✓ | | | ✓ | ✓ | | |
| | | | | | | | | | | | | |

## PEUGEOT 607 2.2 16V, 2.2HDI, 3.0 V6 24V 02/00→

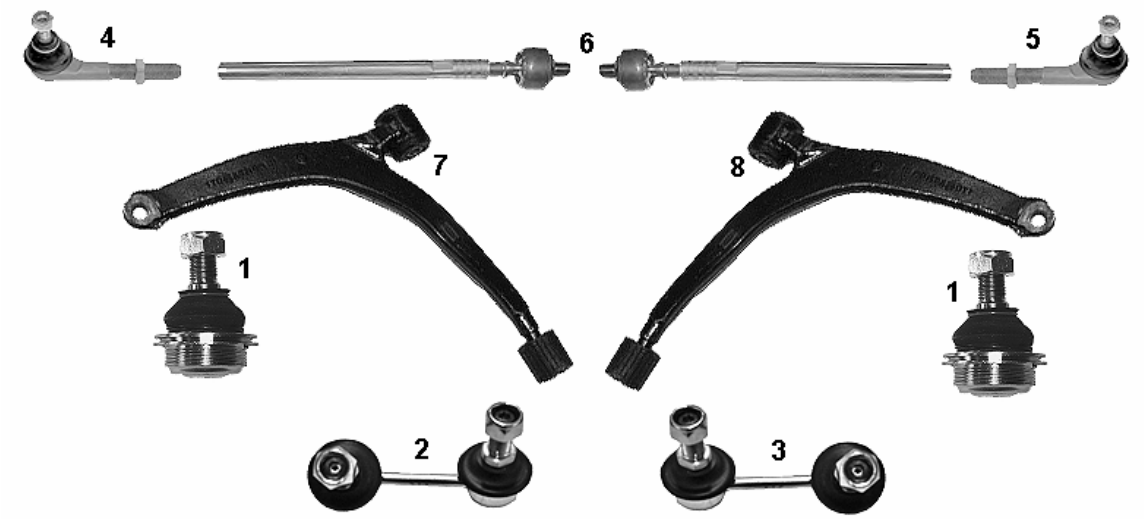


| NR | MAPCO | REF | | | ← | → | ↑ | ↓ | | | NEW | INFO |
|---|---|---|---|---|---|---|---|---|---|---|---|---|
| 1 | 19425 | 3640.34 | ✓ | | ✓ | | | | ✓ | ✓ | | |
| 2 | 19370 | 5178.22 | | ✓ | ✓ | | | | ✓ | ✓ | | |
| 3 | 19369 | 5178.21 | | ✓ | | ✓ | | | ✓ | ✓ | | |
| 4 | 19382 | 3817.43 | ✓ | | ✓ | | | | ✓ | ✓ | | M16x 1,5RHT |
| 5 | 19381 | 3817.44 | ✓ | | | ✓ | | | ✓ | ✓ | | M16x 1,5RHT |
| 6 | 19380 | 3812.C7 | ✓ | | ✓ | ✓ | | | ✓ | ✓ | | |
| 7 | 19487 | 3520.K6 | ✓ | | ✓ | | | | ✓ | ✓ | ✓ | |
| 8 | 19488 | 3521.G6 | ✓ | | | ✓ | | | ✓ | ✓ | ✓ | |

## PEUGEOT 806 2.0
## PEUGEOT 806 D + TD

06/94→08/02

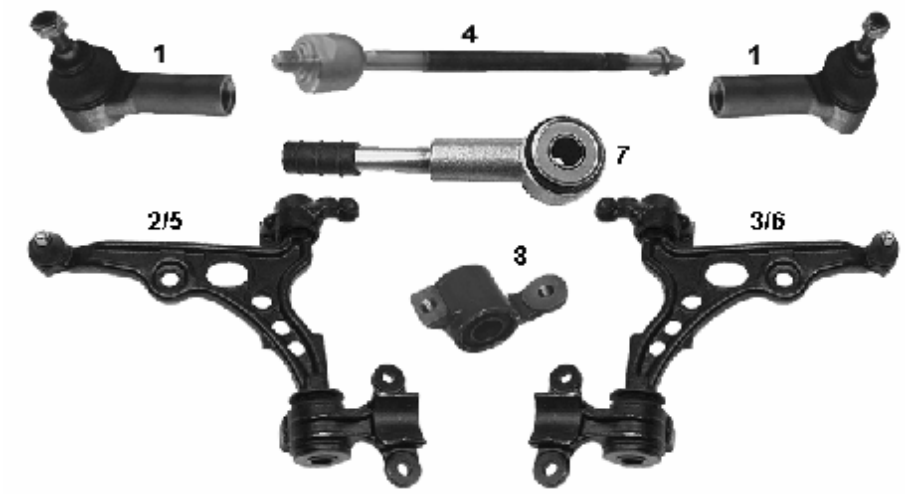


| NR | MAPCO | REF | | | ← | → | ↑ | ↓ | | | NEW | INFO |
|---|---|---|---|---|---|---|---|---|---|---|---|---|
| 1 | 19430 | 4059.09 | ✓ | | ✓ | ✓ | | | ✓ | ✓ | | M14x1,5RHT |
| 2 | 19431 | 3520.C5 | ✓ | | ✓ | | | | ✓ | ✓ | | STOP 2.0 |
| 3 | 19432 | 3521.85 | ✓ | | | ✓ | | | ✓ | ✓ | | STOP 2.0 |
| 4 | 19023 | 3812.A4 | ✓ | | ✓ | | | | ✓ | ✓ | | |
| 5 | 19433 | 3520.G9 | ✓ | | ✓ | | | | ✓ | ✓ | | ✓ 2.0 |
| 6 | 19434 | 3521.C9 | ✓ | | | ✓ | | | ✓ | ✓ | | ✓ 2.0 |
| 7 | 19363 | 5087.35 | ✓ | | ✓ | ✓ | | | ✓ | ✓ | | |
| 8 | 33017 | 1312317080 | ✓ | | ✓ | ✓ | | | ✓ | ✓ | | |
| | | | | | | | | | | | | |

## PEUGEOT 807

06/02→

| NR | MAPCO | REF | | | ← | → | ↑ | ↓ | | | NEW | INFO |
|---|---|---|---|---|---|---|---|---|---|---|---|---|

| NR | MAPCO | REF | | | ← | → | ↑ | ↓ | | | NEW | INFO |
|---|---|---|---|---|---|---|---|---|---|---|---|---|
| 1 | 19492 | 77362279 | ✓ | | ✓ | ✓ | | | ✓ | ✓ | | M14x1,5 |
| 2 | 19376HPS | 5087.51 | ✓ | | ✓ | ✓ | | | ✓ | ✓ | | |
| 3 | 33017 | 1312317080 | ✓ | | ✓ | ✓ | | | ✓ | ✓ | | |
| 4 | 49082 | 3521.H0 | ✓ | | ✓ | | | | ✓ | ✓ | ✓ | |
| 5 | 49083 | 3521.H1 | ✓ | | | ✓ | | | ✓ | ✓ | ✓ | |

## PEUGEOT BOXER 03/94→ 01/01

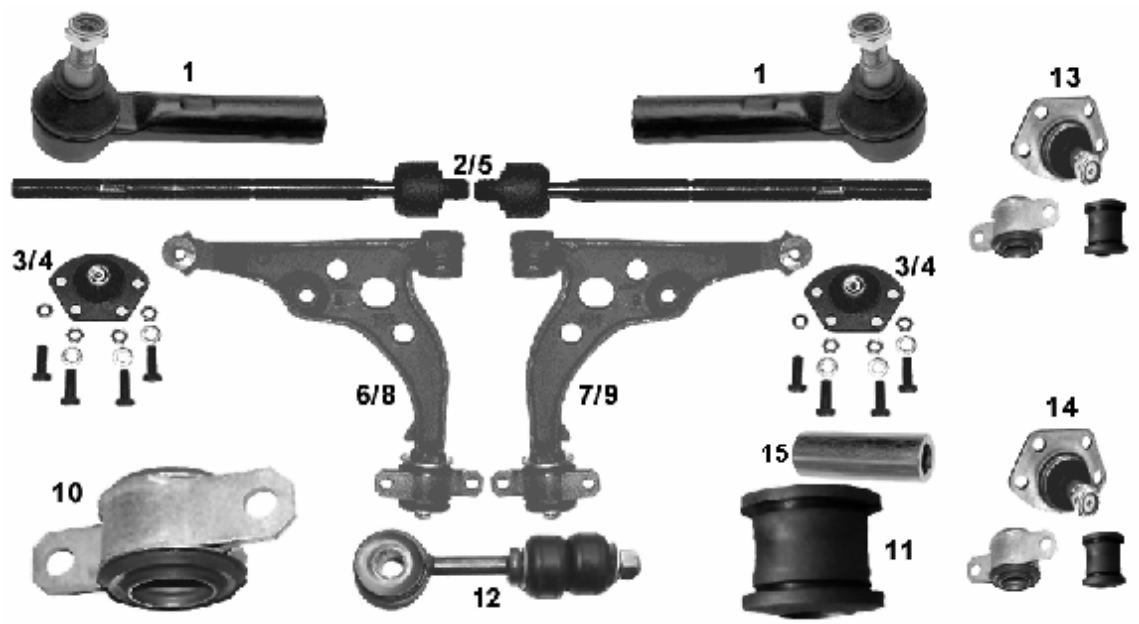


| NR | MAPCO | REF | | | ← | → | ↑ | ↓ | | | NEW | INFO |
|---|---|---|---|---|---|---|---|---|---|---|---|---|
| 1 | 19447 | 4018.A3 | ✓ | | ✓ | ✓ | | | ✓ | ✓ | | M16x1,5RHT L=120,0mm |
| 2 | 19448 | 4018.A4 | ✓ | | ✓ | ✓ | | | | ✓ | | |
| 3 | 19449 | 3640.32 | ✓ | | ✓ | ✓ | | | ✓ | ✓ | | ✓ (1.0t-1.4t) |
| 4 | 19450 | 3640.33 | ✓ | | ✓ | ✓ | | | ✓ | ✓ | | ✓ (1.8t) |
| 5 | 19458 | 4018.A4 | ✓ | | ✓ | ✓ | | | ✓ | | | |
| 6 | 19461 | 3520.95 | ✓ | | ✓ | | | | ✓ | ✓ | | ✓ (1.0t-1.4t) |
| 7 | 19462 | 3521.65 | ✓ | | | ✓ | | | ✓ | ✓ | | ✓ (1.0t-1.4t) |
| 8 | 19463 | 3520.96 | ✓ | | ✓ | | | | ✓ | ✓ | | ✓ (1.8t) |
| 9 | 19464 | 3521.66 | ✓ | | | ✓ | | | ✓ | ✓ | | ✓ (1.8t) |
| 10 | 33001 | 3523.94 | ✓ | | ✓ | ✓ | | | ✓ | ✓ | | |
| 11 | 33006 | 3523.93 | ✓ | | ✓ | ✓ | | | ✓ | ✓ | | |
| 15 | 33006/1 | 3525.05 | ✓ | | ✓ | ✓ | | | ✓ | ✓ | | Hülse |
| 12 | 19366 | 5087.37 | ✓ | | ✓ | ✓ | | | ✓ | ✓ | | |
| 13 | 19251 | | ✓ | | ✓ | ✓ | | | ✓ | ✓ | | Kit ✓ (1.0t-1.4t) |
| 14 | 19250 | | ✓ | | ✓ | ✓ | | | ✓ | ✓ | | Kit ✓ (1.8t) |

## PEUGEOT BOXER 02/01→

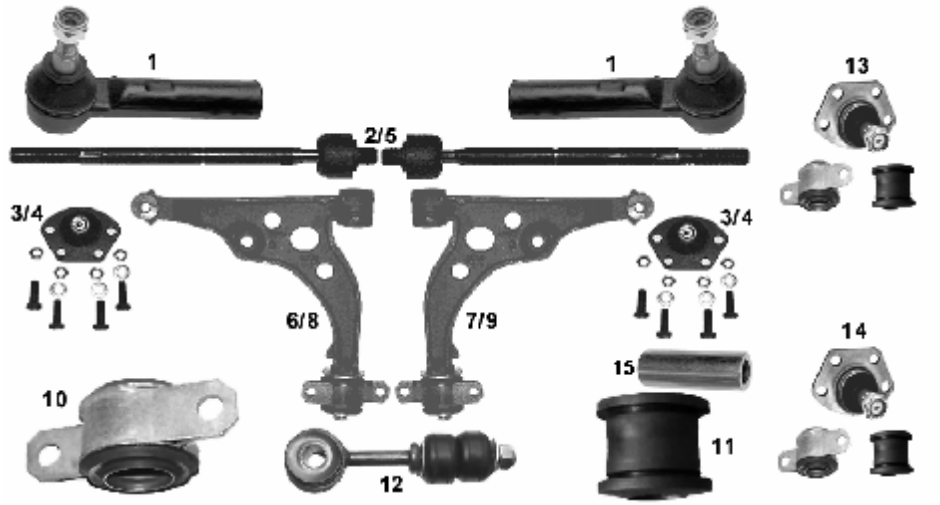


| NR | MAPCO | REF | | | ← | → | ↑ | ↓ | | | NEW | INFO |
|---|---|---|---|---|---|---|---|---|---|---|---|---|
| 1 | 19447 | 4018.A3 | ✓ | | ✓ | ✓ | | | ✓ | ✓ | | M16x1,5RHT L=120,0mm |
| 2 | 19448 | 4018.A4 | ✓ | | ✓ | ✓ | | | | ✓ | | |
| 3 | 19449 | 3640.32 | ✓ | | ✓ | ✓ | | | ✓ | ✓ | | ✓ (1.0t-1.4t) |
| 4 | 19450 | 3640.33 | ✓ | | ✓ | ✓ | | | ✓ | ✓ | | ✓ (1.8t) |
| 5 | 19458 | 4018.A4 | ✓ | | ✓ | ✓ | | | ✓ | | | |
| 6 | 49084 | 3520.N3 | ✓ | | ✓ | | | | ✓ | ✓ | | ✓ (1.0t-1.4t) |
| 7 | 49085 | 3521.J3 | ✓ | | | ✓ | | | ✓ | ✓ | | ✓ (1.0t-1.4t) |
| 8 | 49086 | 3520.L0 | ✓ | | ✓ | | | | ✓ | ✓ | | ✓ (1.8t) |
| 9 | 49087 | 3521.H3 | ✓ | | | ✓ | | | ✓ | ✓ | | ✓ (1.8t) |
| 10 | 33001 | 3523.94 | ✓ | | ✓ | ✓ | | | ✓ | ✓ | | |
| 11 | 33006 | 3523.93 | ✓ | | ✓ | ✓ | | | ✓ | ✓ | | |
| 15 | 33006/1 | 3525.05 | ✓ | | ✓ | ✓ | | | ✓ | ✓ | | Hülse |
| 12 | 19366 | 5087.37 | ✓ | | ✓ | ✓ | | | ✓ | ✓ | | |
| 13 | 19251 | | ✓ | | ✓ | ✓ | | | ✓ | ✓ | | Kit ✓ (1.0t-1.4t) |
| 14 | 19250 | | ✓ | | ✓ | ✓ | | | ✓ | ✓ | | Kit ✓ (1.8t) |

## PEUGEOT EXPERT 02/96→

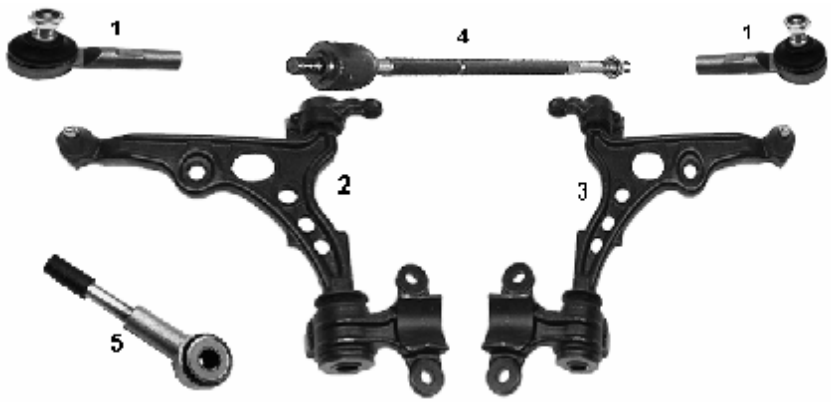


| NR | MAPCO | REF | | | ← | → | ↑ | ↓ | | | NEW | INFO |
|---|---|---|---|---|---|---|---|---|---|---|---|---|
| 1 | 19430 | 4059.09 | ✓ | | ✓ | ✓ | | | ✓ | ✓ | | M14x1,5RHT |
| 2 | 19431 | 3520.C5 | ✓ | | ✓ | | | | ✓ | ✓ | | |
| 3 | 19432 | 3521.85 | ✓ | | | ✓ | | | ✓ | ✓ | | |
| 4 | 19023 | 3812.A4 | ✓ | | ✓ | ✓ | | | ✓ | ✓ | | |
| 5 | 19363 | 5087.35 | ✓ | | ✓ | ✓ | | | ✓ | ✓ | | |

## PEUGEOT J 5 — 09/81→03/94

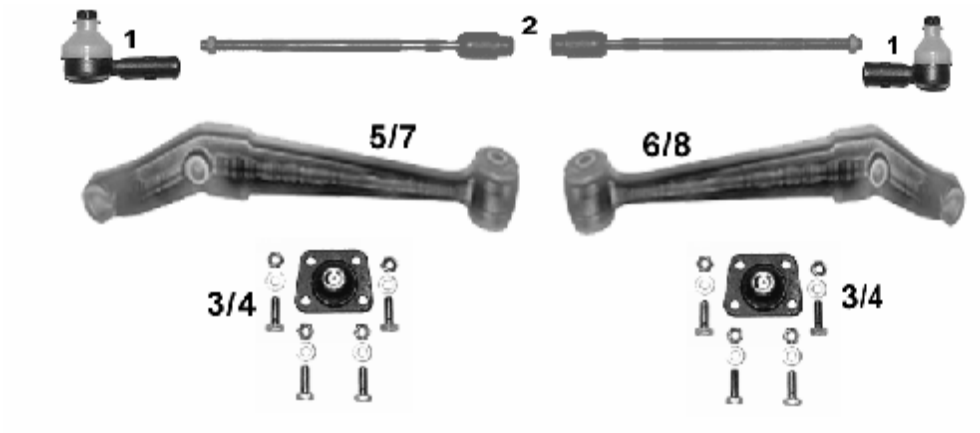


| NR | MAPCO | REF | | | ← | → | ↑ | ↓ | | | NEW | INFO |
|---|---|---|---|---|---|---|---|---|---|---|---|---|
| 1 | 19420 | 3817.11 | ✓ | | ✓ | ✓ | | | ✓ | ✓ | | M16x1,5RHT |
| 2 | 19405 | 3812.27 | ✓ | | ✓ | ✓ | | | | ✓ | | M16x1,5RHT |
| 3 | 19421 | 3640.18 | ✓ | | ✓ | ✓ | | | ✓ | ✓ | | → 09/85 |
| 4 | 19422 | 3640.26 | ✓ | | ✓ | ✓ | | | ✓ | ✓ | | 10/85→ |
| 5 | 19441 | 3520.76 | ✓ | | ✓ | | | | ✓ | ✓ | | ✓ (1.0 - 1.4 t) 10/85→ 93 |
| 6 | 19442 | 3521.52 | ✓ | | | ✓ | | | ✓ | ✓ | | ✓ (1.0 - 1.4 t) 10/85→ 93 |
| 7 | 19468 | 3520.77 | ✓ | | ✓ | | | | ✓ | ✓ | | ✓ (1.8 t) 10/85→ 93 |
| 8 | 19469 | 3521.53 | ✓ | | | ✓ | | | ✓ | ✓ | | ✓ (1.8 t) 10/85→ 93 |

## PEUGEOT J 9 — 03/80→ 06/87

| NR | MAPCO | REF | | | ← | → | ↑ | ↓ | | | NEW | INFO |
|---|---|---|---|---|---|---|---|---|---|---|---|---|
| 1 | 19356 | 3874.30 | ✓ | | ✓ | | | | ✓ | ✓ | | M20 x 1,5 LHT |
| 2 | 19357 | 3874.31 | ✓ | | | ✓ | | | ✓ | ✓ | | M20 x 1,5 RHT |
| 3 | 19358 | 3608.28 | ✓ | | ✓ | ✓ | ✓ | | ✓ | ✓ | | |
| 4 | 19359 | 3622.15 | ✓ | | ✓ | ✓ | | ✓ | ✓ | ✓ | | |
| | | | | | | | | | | | | |

## PEUGEOT PARTNER 1996→

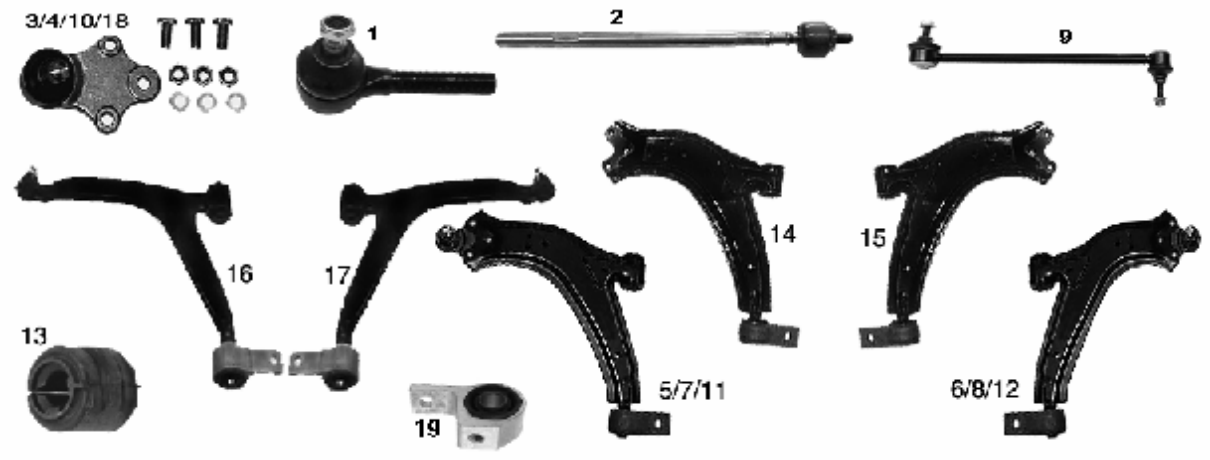


| NR | MAPCO | REF | | | ← | → | ↑ | ↓ | | | NEW | INFO |
|---|---|---|---|---|---|---|---|---|---|---|---|---|
| 1 | 19301 | 3817.50 | ✓ | | ✓ | ✓ | | | ✓ | ✓ | | M14x1,5RHT |
| 2 | 19411 | 3812.C0 | ✓ | | ✓ | ✓ | | | ✓ | ✓ | | |
| 3 | 19426 | 3640.39 | ✓ | | ✓ | ✓ | | | | ✓ | | |
| 4 | 19427 | 3640.38 | ✓ | | ✓ | ✓ | | | ✓ | | | Chassis→ O 7972, →1999, 16mm |
| 5 | 19437 | 3520.F6 | ✓ | | ✓ | | | | | ✓ | | |
| 6 | 19438 | 3521.A6 | ✓ | | | ✓ | | | | ✓ | | |
| 7 | 19439 | 3520.F7 | ✓ | | ✓ | | | | ✓ | | | |
| 8 | 19440 | 3521.A7 | ✓ | | | ✓ | | | ✓ | | | |
| 9 | 19337HPS | 5087.39 | ✓ | | ✓ | ✓ | | | ✓ | ✓ | | |
| 10 | 19473 | 3640.51 | ✓ | | ✓ | ✓ | | | ✓ | | | Chassis O 7973 → , 1999→,18 mm |
| 11 | 19474 | 3520.H5 | ✓ | | ✓ | | | | ✓ | ✓ | | 18 mm |
| 12 | 19475 | 3521.E5 | ✓ | | | ✓ | | | ✓ | ✓ | | 18 mm |
| 13 | 33424 | 509465 | ✓ | | ✓ | ✓ | | | ✓ | ✓ | | Ø 21 mm |
| 14 | 19474/1 | 3521.87 | ✓ | | ✓ | ✓ | | | ✓ | ✓ | | |
| 15 | 19475/1 | 3521.90 | ✓ | | ✓ | ✓ | | | ✓ | ✓ | | |
| 16 | 19485 | 3520.J3 | ✓ | | ✓ | | | | ✓ | | | ✓ 2.0 HDI 02/00→ |
| 17 | 19486 | 3521.F3 | ✓ | | | ✓ | | | ✓ | | | ✓ 2.0 HDI 02/00→ |
| 18 | 19389 | 3640.50 | ✓ | | ✓ | ✓ | | | | ✓ | | Chassis O 7973→,18 mm |
| 19 | 33431 | 3523.83 | ✓ | | ✓ | ✓ | | | ✓ | | ✓ | ✓ 2.0 HDI 02/00→ |

# PROTON

## PROTON PERSONA 300 03/96 →

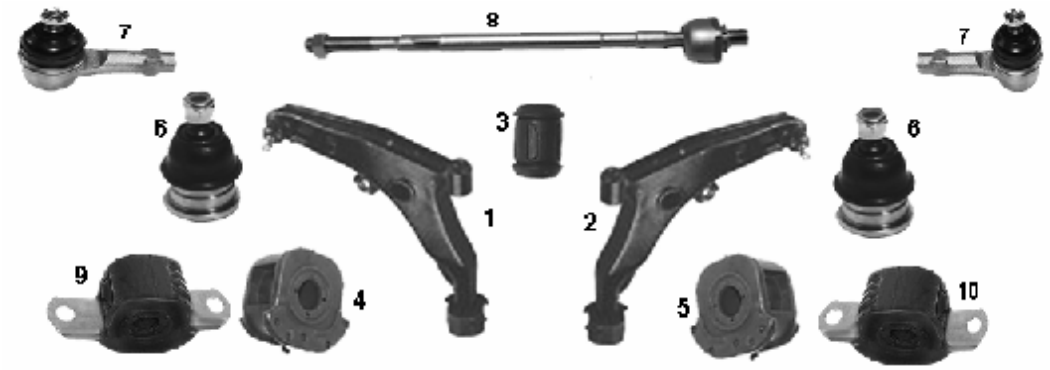


| NR | MAPCO | REF | | | ← | → | ↑ | ↓ | | | NEW | INFO |
|---|---|---|---|---|---|---|---|---|---|---|---|---|
| 1 | 49540 | MB 912077 | ✓ | | ✓ | | | | ✓ | ✓ | | |
| 2 | 49541 | MB 912078 | ✓ | | | ✓ | | | ✓ | ✓ | | |
| 3 | 33552 | MR 130982 | ✓ | | ✓ | ✓ | | | ✓ | ✓ | | |
| 4 | 33551 | MB 808909 | ✓ | | ✓ | | | | ✓ | ✓ | | |
| 5 | 33550 | MB 808910 | ✓ | | | ✓ | | | ✓ | ✓ | | |
| 6 | 49578 | MB 241833 | ✓ | | ✓ | ✓ | | | ✓ | ✓ | | |
| 7 | 19547 | MB 598023 | ✓ | | ✓ | ✓ | | | ✓ | ✓ | | M12 x1,25 RHT |
| 8 | 59206 | PW 530031 | ✓ | | ✓ | ✓ | | | ✓ | ✓ | | 327,5mm |
| 9 | 33551/1 | MB 808909 | ✓ | | ✓ | | | | ✓ | ✓ | | |
| 10 | 33550/1 | MB 808910 | ✓ | | | ✓ | | | ✓ | ✓ | | |

## PROTON PERSONA 400 01/94 →

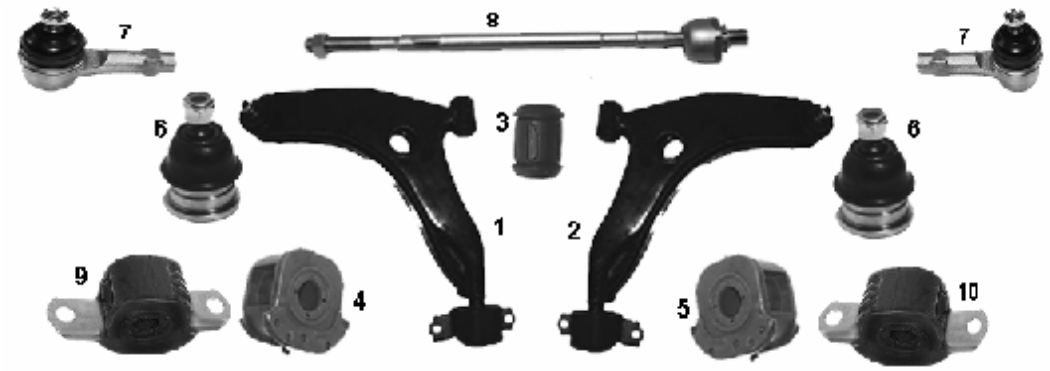


| NR | MAPCO | REF | | | ← | → | ↑ | ↓ | | | NEW | INFO |
|---|---|---|---|---|---|---|---|---|---|---|---|---|
| 1 | 49544 | MR 179479 | ✓ | | ✓ | | | | ✓ | ✓ | | |
| 2 | 49545 | MR 179480 | ✓ | | | ✓ | | | ✓ | ✓ | | |
| 3 | 33552 | MR 130982 | ✓ | | ✓ | ✓ | | | ✓ | ✓ | | |
| 4 | 33551 | MB 808909 | ✓ | | ✓ | | | | ✓ | ✓ | | |
| 5 | 33550 | MB 808910 | ✓ | | | ✓ | | | ✓ | ✓ | | |
| 6 | 49578 | MB 241833 | ✓ | | ✓ | ✓ | | | ✓ | ✓ | | |
| 7 | 19540 | MB 912076 | ✓ | | ✓ | ✓ | | | ✓ | ✓ | | M12 x1,25 RHT |
| 8 | 59206 | PW 530031 | ✓ | | ✓ | ✓ | | | ✓ | ✓ | | 327,5mm |
| 9 | 33551/1 | MB808909 | ✓ | | ✓ | | | | ✓ | ✓ | | |
| 10 | 33550/1 | MB808910 | ✓ | | | ✓ | | | ✓ | ✓ | | |

**VERGLEICHSNUMMERN DIENEN NUR ZUR BESSEREN IDENTIFIKATION UND DÜRFEN NICHT AUF RECHNUNGEN ERSCHEINEN!!!**
**Reference numbers are used for better identification only!**
**Références d'origine pour meilleure identification seulement !**

# RENAULT

## RENAULT CLIO I

05/90→ 1996

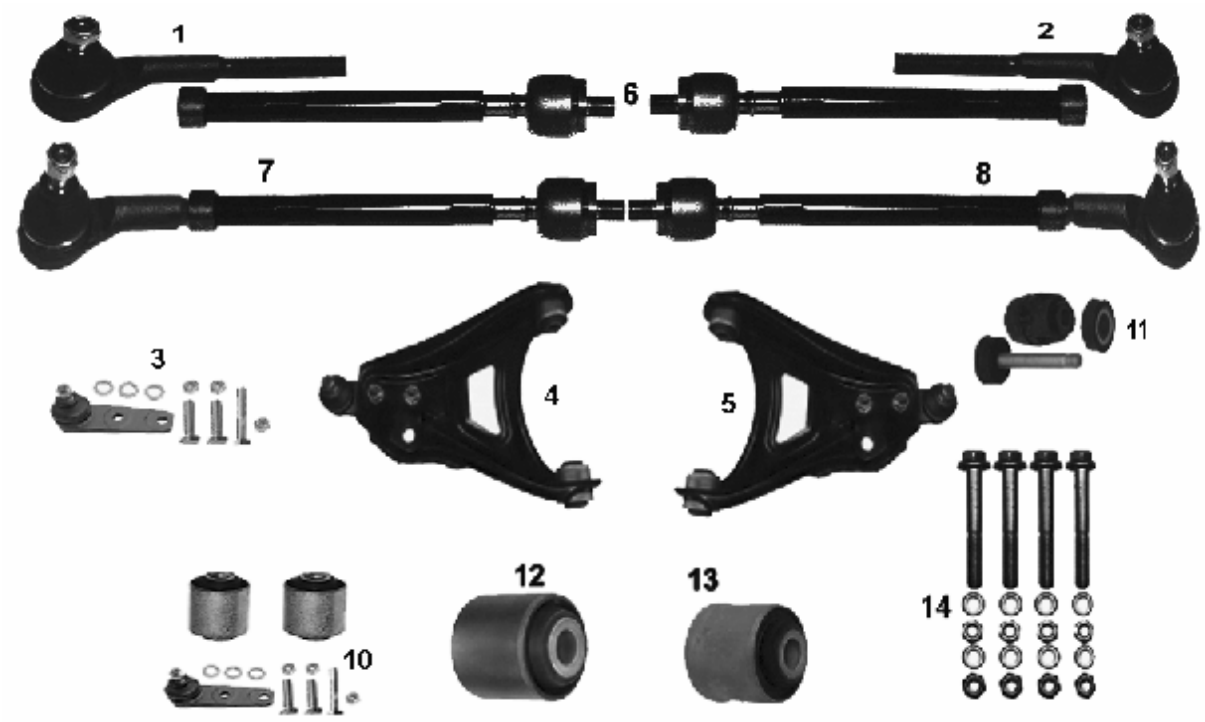


| NR | MAPCO | REF | | | ← | → | ↑ | ↓ | | | NEW | INFO |
|---|---|---|---|---|---|---|---|---|---|---|---|---|
| 1 | 19133 | 7701467273 | ✓ | | ✓ | | | | ✓ | ✓ | | M14x1,5RHT |
| 2 | 19134 | 7701467274 | ✓ | | | ✓ | | | ✓ | ✓ | | M14x1,5RHT |
| 3 | 19109 | 7701468883 | ✓ | | ✓ | ✓ | | | ✓ | ✓ | | |
| 4 | 19137 | 7700794386 | ✓ | | ✓ | | | | ✓ | ✓ | | 16V |
| 5 | 19138 | 7700794387 | ✓ | | | ✓ | | | ✓ | ✓ | | 16V |
| 6 | 19152 | 7700658272 | ✓ | | ✓ | ✓ | | | ✓ | ✓ | | |
| 7 | 19153 | 7701467271 | ✓ | | ✓ | | | | ✓ | ✓ | | 1+6 |
| 8 | 19154 | 7701467272 | ✓ | | | ✓ | | | ✓ | ✓ | | 2+6 |
| 9 | 19155 | 7701466158 | ✓ | | ✓ | ✓ | | | ✓ | ✓ | | 7+8 |
| 10 | 19209 | | ✓ | | ✓ | ✓ | | | ✓ | ✓ | | Kit |
| 11 | 33164 | 7700799404 | ✓ | | ✓ | ✓ | | | ✓ | ✓ | | |
| 12 | 33129 | 7700799065 | ✓ | | ✓ | ✓ | | | ✓ | ✓ | | |
| 13 | 33130 | 7700799064 | ✓ | | ✓ | ✓ | | | ✓ | ✓ | | |
| 14 | 95137 | | ✓ | | ✓ | ✓ | | | ✓ | ✓ | | MS |

## RENAULT CLIO I

1996→ 09/98

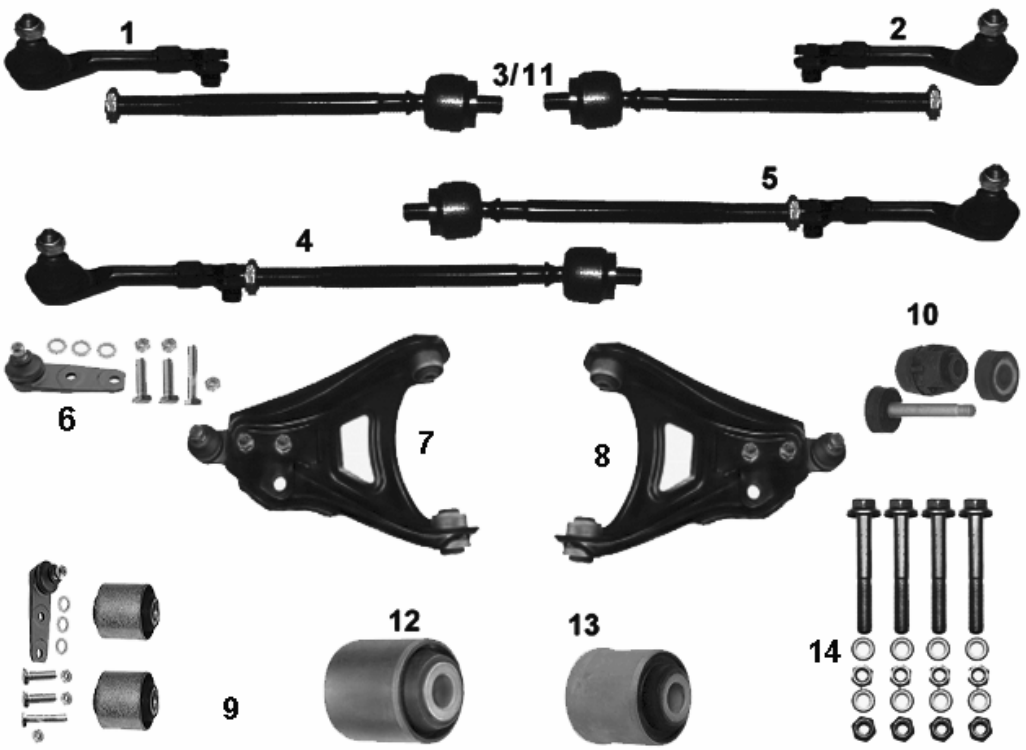


| NR | MAPCO | REF | | | ← | → | ↑ | ↓ | | | NEW | INFO |
|---|---|---|---|---|---|---|---|---|---|---|---|---|
| 1 | 49100 | 6000022720 | ✓ | | ✓ | | | | ✓ | ✓ | | M14 x 1,5 RHT |
| 2 | 49101 | 6000022721 | ✓ | | | ✓ | | | ✓ | ✓ | | M14 x 1,5 RHT |
| 3 | 19174 | 7701469777 | ✓ | | ✓ | ✓ | | | | ✓ | | |
| 4 | 19175 | 7701467539 | ✓ | | ✓ | | | | ✓ | ✓ | | 1+3 |
| 5 | 19176 | 7701467540 | ✓ | | | ✓ | | | ✓ | ✓ | | 2+3 |
| 6 | 19109 | 7701468883 | ✓ | | ✓ | ✓ | | | ✓ | ✓ | | |
| 7 | 19137 | 7700794386 | ✓ | | ✓ | | | | ✓ | ✓ | | |
| 8 | 19138 | 7700794387 | ✓ | | | ✓ | | | ✓ | ✓ | | |
| 9 | 19209 | | ✓ | | ✓ | ✓ | | | ✓ | ✓ | | Kit |
| 10 | 33164 | 7700799404 | ✓ | | ✓ | ✓ | | | ✓ | ✓ | | |
| 11 | 49102 | 7701469778 | ✓ | | ✓ | ✓ | | | ✓ | | | |
| 12 | 33129 | 7700799065 | ✓ | | ✓ | ✓ | | | ✓ | ✓ | | |
| 13 | 33130 | 7700799064 | ✓ | | ✓ | ✓ | | | ✓ | ✓ | | |
| 14 | 95137 | | ✓ | | ✓ | ✓ | | | ✓ | ✓ | | MS |
| | | | | | | | | | | | | |
| | | | | | | | | | | | | |

## RENAULT CLIO I 16S, RTi, RSi, S, Williams 06/90→ 01/98

| NR | MAPCO | REF | | | ← | → | ↑ | ↓ | | | NEW | INFO |
|---|---|---|---|---|---|---|---|---|---|---|---|---|
| 1 | 36123 | | ✓ | | ✓ | | | | ✓ | ✓ | | |
| 2 | 36132 | | ✓ | | | ✓ | | | ✓ | ✓ | | |
| 3 | 36133 | | ✓ | | ✓ | ✓ | | | ✓ | ✓ | | |

## RENAULT CLIO II 09/98→

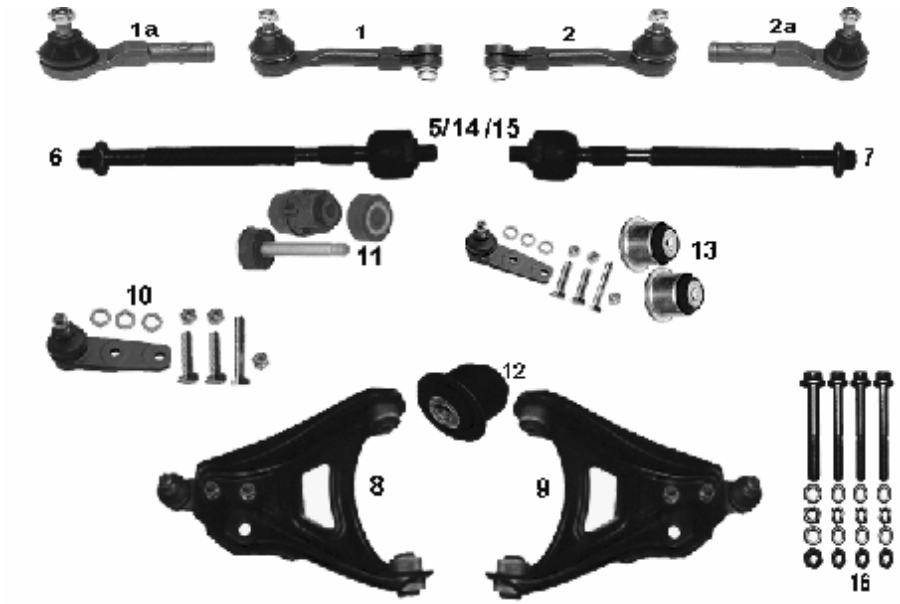


| NR | MAPCO | REF | | | ← | → | ↑ | ↓ | | | NEW | INFO |
|---|---|---|---|---|---|---|---|---|---|---|---|---|
| 1 | 19189 | 7701471145 | ✓ | | ✓ | | | | ✓ | ✓ | | → 11/99 M14 x 1,5 RHT |
| 1a | 49135 | 7701047492 | ✓ | | ✓ | | | | ✓ | ✓ | | 12/99→ 12,20mm M14x1,5RHT |
| 2 | 19190 | 7701471146 | ✓ | | | ✓ | | | ✓ | ✓ | | → 11/99 M14 x 1,5 RHT |
| 2a | 49136 | 7701474493 | ✓ | | | ✓ | | | ✓ | ✓ | | 12/99→ 12,20mm M14x1,5RHT |
| 5 | 19193 | 7701471125 | ✓ | | ✓ | ✓ | | | | ✓ | | (**SMI**) → 11/99 **L=240mm** |
| 6 | 19194 | 7701471144 | ✓ | | ✓ | ✓ | | | ✓ | | | (**TRW**) 1998→2000 |
| 7 | 19195 | 7701472113 | ✓ | | ✓ | ✓ | | | | ✓ | | 2000 → **L= 235mm** |
| 8 | 19196 | 7700425227 | ✓ | | ✓ | | | | ✓ | ✓ | | |
| 9 | 19197 | 7700425228 | ✓ | | | ✓ | | | ✓ | ✓ | | |
| 10 | 19109 | 7701468883 | ✓ | | ✓ | ✓ | | | ✓ | ✓ | | |
| 11 | 33164 | 7700799404 | ✓ | | ✓ | ✓ | | | ✓ | ✓ | | |
| 12 | 33165 | 7700419249 | ✓ | | ✓ | ✓ | | | ✓ | ✓ | | |
| 13 | 19208 | | ✓ | | ✓ | ✓ | | | ✓ | ✓ | | Kit |
| 14 | 49117/1 | 7701472120 | ✓ | | ✓ | ✓ | | | ✓ | ✓ | | Außen M 12x1,5 (**SMI**) 12/99→ **L=300mm** |
| 15 | 51117/1 | 7701472734 | ✓ | | ✓ | ✓ | | | ✓ | ✓ | | Außen M 14x1,5 (**TRW**) 12/99→ **L=296mm** |
| 16 | 95137 | | ✓ | | ✓ | ✓ | | | ✓ | ✓ | | MS |

## RENAULT CLIO III 06/05→

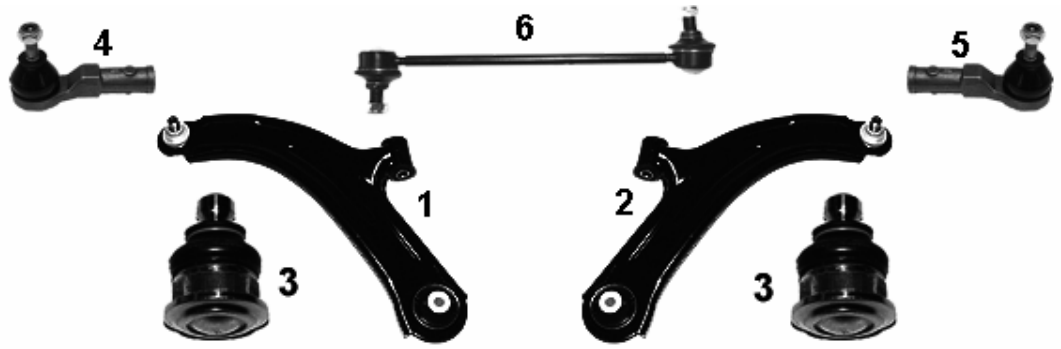


| NR | MAPCO | REF | | | ← | → | ↑ | ↓ | | | NEW | INFO |
|---|---|---|---|---|---|---|---|---|---|---|---|---|
| 1 | **59358** | 8200 346 941 | ✓ | | ✓ | | | ✓ | ✓ | ✓ | | |
| 2 | **59359** | 8200 346 942 | ✓ | | | ✓ | | ✓ | ✓ | ✓ | | |
| 3 | **49151** | 8200 298 455 part of | ✓ | | ✓ | ✓ | | | ✓ | ✓ | | ø = 18mm |
| 4 | **49135** | 7701047492 | ✓ | | ✓ | | | | ✓ | ✓ | | 12,20mm M14x1,5RHT |
| 5 | **49136** | 7701474493 | ✓ | | | ✓ | | | ✓ | ✓ | | 12,20mm M14x1,5RHT |
| 6 | **19120HPS** | 8200 127 308 | ✓ | | ✓ | ✓ | | | ✓ | ✓ | ✓ | M10x1,25 L=248,0mm |

## RENAULT ESPACE I (J11) 07/84→12/92

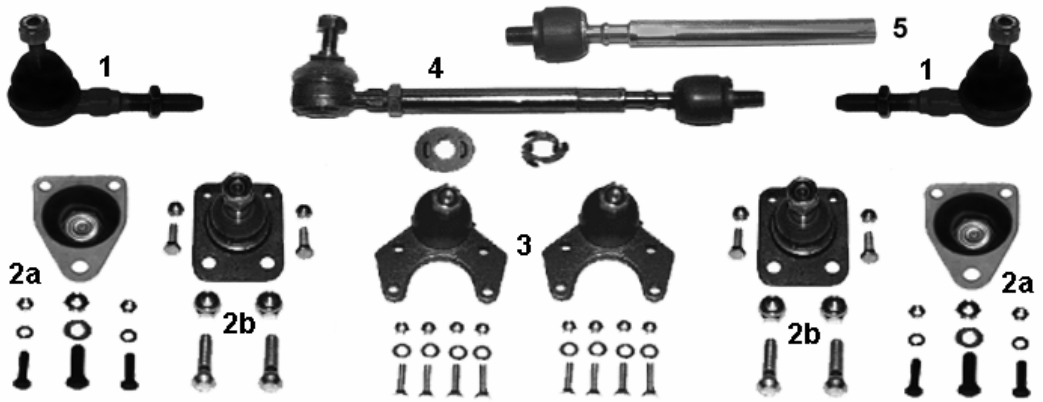


| NR | MAPCO | REF | | | ← | → | ↑ | ↓ | | | NEW | INFO |
|---|---|---|---|---|---|---|---|---|---|---|---|---|
| 1 | **19108** | 7701464151 | ✓ | | ✓ | ✓ | | | ✓ | ✓ | | M14 x 1,5 RHT |
| 2a | **19116** | 7701461332 | ✓ | | ✓ | ✓ | ✓ | | ✓ | ✓ | | → 12/87 |
| 2b | **19127** | 7701463229 | ✓ | | ✓ | ✓ | ✓ | | ✓ | ✓ | | 01/88→ 1992 |
| 3 | **19115** | 7701461331 | ✓ | | ✓ | ✓ | | ✓ | ✓ | ✓ | | → 12/87 |
| 3 | **19128** | 7701463230 | ✓ | | ✓ | ✓ | | ✓ | ✓ | ✓ | | 01/88→ 12/92 |
| 4 | **19107** | 7701463025 | ✓ | | ✓ | ✓ | | | ✓ | ✓ | | **1 + 5** |
| 5 | **19107/1** | 7701463025 | ✓ | | ✓ | ✓ | | | ✓ | ✓ | | **220 mm** |

## RENAULT ESPACE II (J/S63) 01/91→12/96

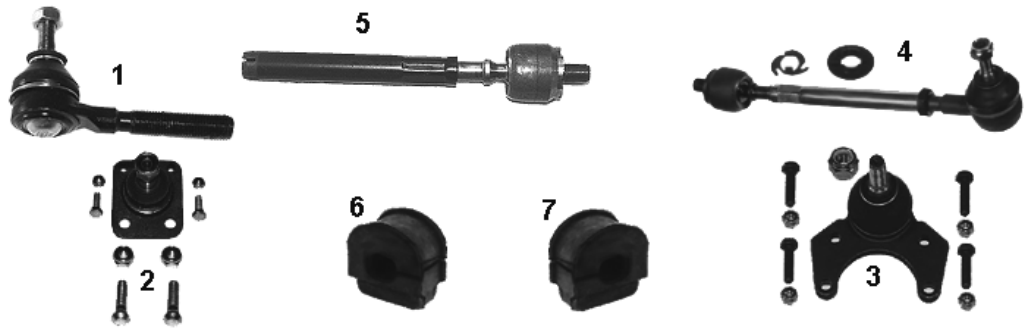


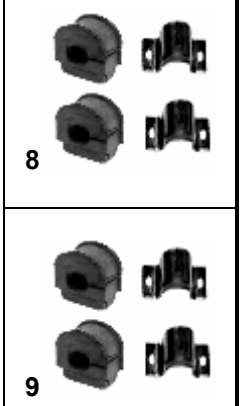


| NR | MAPCO | REF | | | ← | → | ↑ | ↓ | | | NEW | INFO |
|---|---|---|---|---|---|---|---|---|---|---|---|---|
| 1 | 19108 | 7701464151 | ✓ | | ✓ | ✓ | | | ✓ | ✓ | | M14 x 1,5 RHT |
| 2 | 19127 | 7701463229 | ✓ | | ✓ | ✓ | ✓ | | ✓ | ✓ | | 01/91→ 10/96 |
| 3 | 19128 | 7701463230 | ✓ | | ✓ | ✓ | | ✓ | ✓ | ✓ | | 01/91→ 03/91 |
| 3 | 19179 | 7701465689 | ✓ | | ✓ | ✓ | | ✓ | ✓ | ✓ | | 04/91→ 10/96 |
| 4 | 19126 | 7701646313 | ✓ | | ✓ | ✓ | | | ✓ | ✓ | | **1 + 5** |
| 5 | 19198 | 7701469229 | ✓ | | ✓ | ✓ | | | ✓ | ✓ | | **190 mm** |
| 6 | 33168 | 7700797821 | ✓ | | ✓ | ✓ | | | ✓ | ✓ | | ✓ 2.0,2.2,2.1TD |
| 7 | 33169 | 6025105409 | ✓ | | ✓ | ✓ | | | ✓ | ✓ | | ✓ 2.0,2.2,2.1TD |
| 8 | 36134 | | ✓ | | ✓ | ✓ | | | ✓ | ✓ | | |
| 9 | 36135 | | ✓ | | ✓ | ✓ | | | ✓ | ✓ | | |

## RENAULT ESPACE III (JE) 11/96→10/00

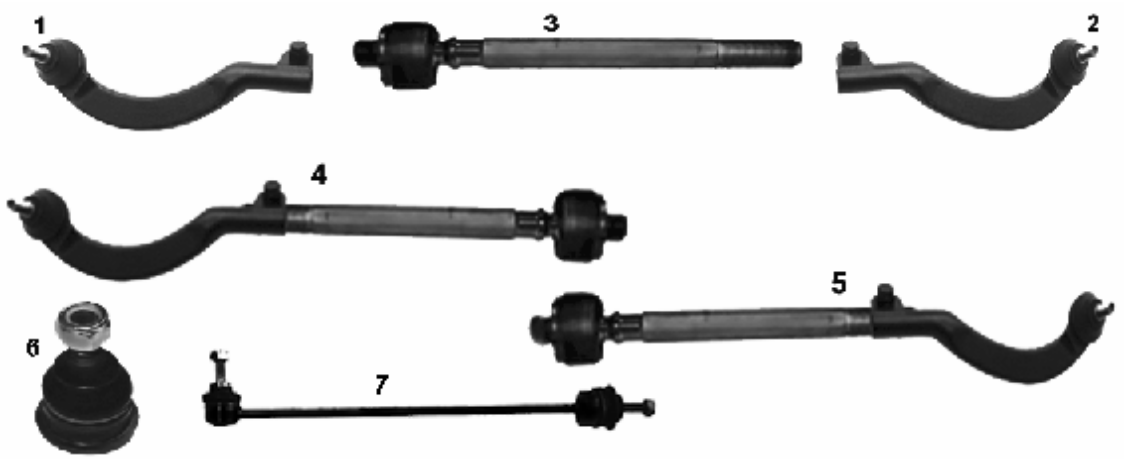


| NR | MAPCO | REF | | | ← | → | ↑ | ↓ | | | NEW | INFO |
|---|---|---|---|---|---|---|---|---|---|---|---|---|
| 1 | 49112 | 6025 370 229 | ✓ | | ✓ | | | | ✓ | ✓ | | M14 x 1,5 RHT |
| 2 | 49113 | 6025 370 230 | ✓ | | | ✓ | | | ✓ | ✓ | | M14 x 1,5 RHT |
| 3 | 49115/1 | | ✓ | | ✓ | ✓ | | | ✓ | ✓ | | M14 x 1,5 RHT |
| 4 | 49114 | 6025 370 493 | ✓ | | ✓ | | | | ✓ | ✓ | | |
| 5 | 49115 | 6025 370 494 | ✓ | | | ✓ | | | ✓ | ✓ | | |
| 6 | 49116 | 6025 308 155 | ✓ | | ✓ | ✓ | | ✓ | ✓ | ✓ | | |
| 7 | 19164HPS | 7700 805 494 | ✓ | | ✓ | ✓ | | | ✓ | ✓ | | |

## RENAULT ESPACE IV (JK0_) 11/02→

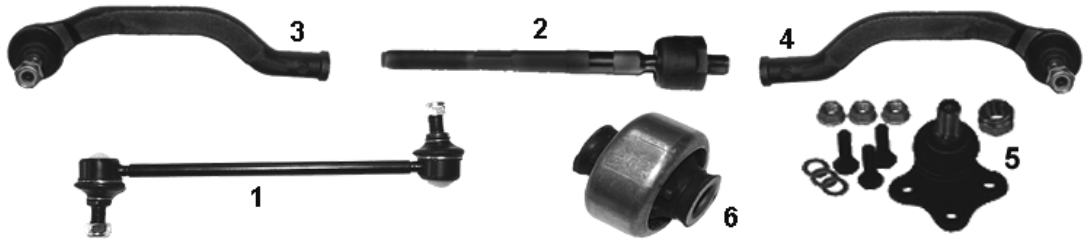


| NR | MAPCO | REF | | | ← | → | ↑ | ↓ | | | NEW | INFO |
|---|---|---|---|---|---|---|---|---|---|---|---|---|
| 1 | 49118HPS | 8200002870 | ✓ | | ✓ | ✓ | | | ✓ | ✓ | | ✓ 1.9dCi |
| 2 | 49145 | 7701472766 | ✓ | | ✓ | ✓ | | | ✓ | ✓ | | M14x1,5 216 mm |
| 3 | 49143 | 7701049282 | ✓ | | ✓ | | | | ✓ | ✓ | | |
| 4 | 49144 | 7701049283 | ✓ | | | ✓ | | | ✓ | ✓ | | |
| 5 | 49140 | 7701476576 | ✓ | | ✓ | ✓ | | ✓ | ✓ | ✓ | | |
| 6 | 33122 | 8200002869 | ✓ | | ✓ | ✓ | | | ✓ | ✓ | ✓ | |

## RENAULT EXPRESS - RAPID 03/86→

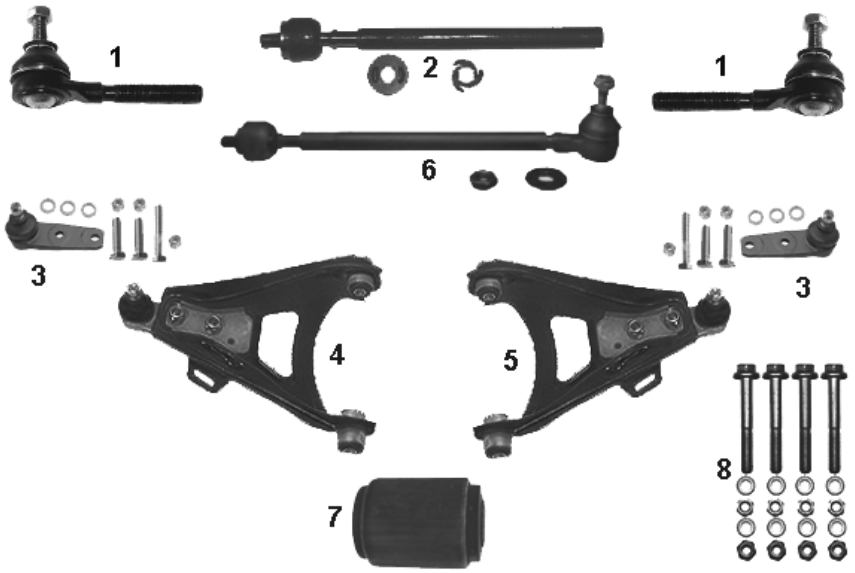


| NR | MAPCO | REF | | | ← | → | ↑ | ↓ | | | NEW | INFO |
|---|---|---|---|---|---|---|---|---|---|---|---|---|
| 1 | 19108 | 7701461141 | ✓ | | ✓ | ✓ | | | ✓ | ✓ | | M14 x 1,5 RHT |
| 2 | 19166/1 | 7701463346 | ✓ | | ✓ | ✓ | | | ✓ | ✓ | | |
| 3 | 19109 | 7701468883 | ✓ | | ✓ | ✓ | | | ✓ | ✓ | | |
| 4 | 19162 | 7700783455 | ✓ | | ✓ | | | | ✓ | ✓ | | |
| 5 | 19163 | 7700783456 | ✓ | | | ✓ | | | ✓ | ✓ | | |
| 6 | 49107 | | ✓ | | ✓ | ✓ | | | ✓ | ✓ | | 1 + 2 |
| 7 | 33100 | 7704000681 | ✓ | | ✓ | ✓ | | | ✓ | ✓ | | |
| 8 | 95137 | | ✓ | | ✓ | ✓ | | | ✓ | ✓ | | MS |
| | | | | | | | | | | | | |

## RENAULT KANGOO 1.2 - 1.4 03/98→

| NR | MAPCO | REF | | | ← | → | ↑ | ↓ | | | NEW | INFO |
|---|---|---|---|---|---|---|---|---|---|---|---|---|
| 1 | **19180** | 7701470765 | ✓ | | ✓ | | | | ✓ | ✓ | | →02/99 M14 x 1,5 RHT |
| 1a | **49135** | 7701047492 | ✓ | | ✓ | | | | ✓ | ✓ | | 03/99→ 12,20mm M14x1,5RHT |
| 2 | **19181** | 7701470766 | ✓ | | | ✓ | | | ✓ | ✓ | | →02/99 M14 x 1,5 RHT |
| 2a | **49136** | 7701474493 | ✓ | | | ✓ | | | ✓ | ✓ | | 03/99→ 12,20mm M14x1,5RHT |
| 3 | **19182** | 7701470763 | ✓ | | ✓ | ✓ | | | | ✓ | | →2000 L= 264mm |
| 4 | **19183** | 7701470764 | ✓ | | ✓ | ✓ | | | ✓ | | | →2000 L= 268mm |
| 5 | **19109** | 7701468883 | ✓ | | ✓ | ✓ | | | ✓ | ✓ | | |
| 6 | **19196** | 7700425227 | ✓ | | ✓ | | | | ✓ | ✓ | | |
| 7 | **19197** | 7700425228 | ✓ | | | ✓ | | | ✓ | ✓ | | |
| 8 | **19208** | | ✓ | | ✓ | ✓ | | | ✓ | ✓ | | Kit |
| 9 | **33165** | 7700419249 | ✓ | | ✓ | ✓ | | | ✓ | ✓ | | |
| 10 | **19195** | 7701472113 | ✓ | | ✓ | ✓ | | | | ✓ | | 2000→ **L= 235mm** |
| 11 | **49117/1** | 7701472120 | ✓ | | ✓ | ✓ | | | ✓ | ✓ | | Außen M12x1,5(**SMI**) 12/99→ **L=300mm** |
| 12 | **51117/1** | 7701472734 | ✓ | | ✓ | ✓ | | | ✓ | ✓ | | Außen M14x1,5(**TRW**) 12/99→ **L=296mm** |
| 13 | **95137** | | ✓ | | ✓ | ✓ | | | ✓ | ✓ | | MS |
| 14 | **49146HPS** | 7700437136 | ✓ | | ✓ | ✓ | | | ✓ | ✓ | ✓ | ✓ **4x4 L=258mm** |
| | | | | | | | | | | | | |
| | | | | | | | | | | | | |
| | | | | | | | | | | | | |

## RENAULT LAGUNA I 11/93→03/01

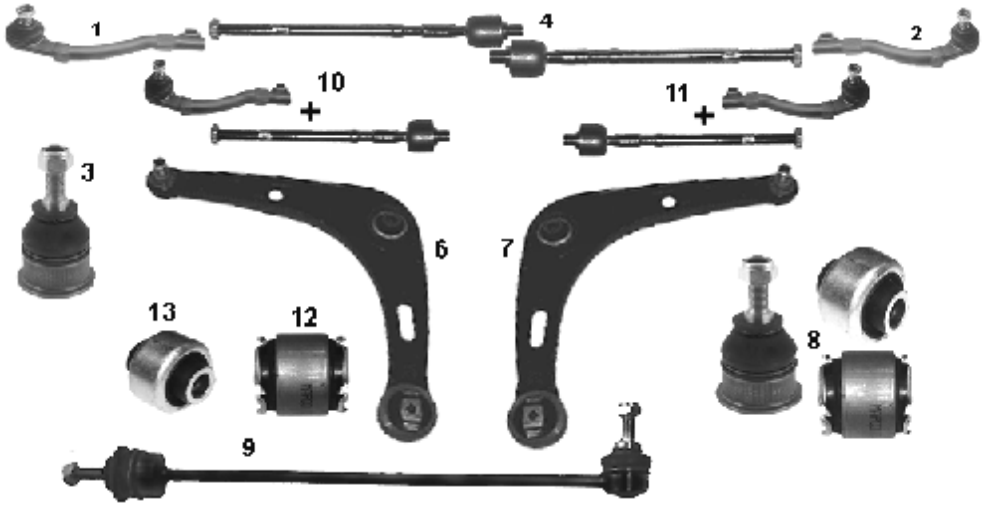


| NR | MAPCO | REF | | | ← | → | ↑ | ↓ | | | NEW | INFO |
|---|---|---|---|---|---|---|---|---|---|---|---|---|
| 1 | 19141 | 6000022737 | ✓ | | ✓ | | | | ✓ | ✓ | | M14 x 1,5 RHT |
| 2 | 19142 | 6000022736 | ✓ | | | ✓ | | | ✓ | ✓ | | M14 x 1,5 RHT |
| 3 | 19143 | 7700829322 | ✓ | | ✓ | ✓ | | | ✓ | ✓ | | |
| 4 | 19156/1 | 7701469665 | ✓ | | ✓ | ✓ | | | ✓ | ✓ | | |
| 6 | 19177 | 7700823097 | ✓ | | ✓ | | | | ✓ | ✓ | | |
| 7 | 19178 | 7700823098 | ✓ | | | ✓ | | | ✓ | ✓ | | |
| 8 | 19212 | | ✓ | | ✓ | ✓ | | | ✓ | ✓ | | kit |
| 9 | 19164HPS | 7700805494 | ✓ | | ✓ | ✓ | | | ✓ | ✓ | | |
| 10 | 19156 | 7701467501 | ✓ | | ✓ | | | | ✓ | ✓ | | 1 + 4 |
| 11 | 19161 | 7701467502 | ✓ | | | ✓ | | | ✓ | ✓ | | 2 + 4 |
| 12 | 33147 | 7700824042 | ✓ | | ✓ | ✓ | | | ✓ | ✓ | | |
| 13 | 33148 | 7700822503 | ✓ | | ✓ | ✓ | | | ✓ | ✓ | | |

## RENAULT LAGUNA II (B74), (K74) 03/01→

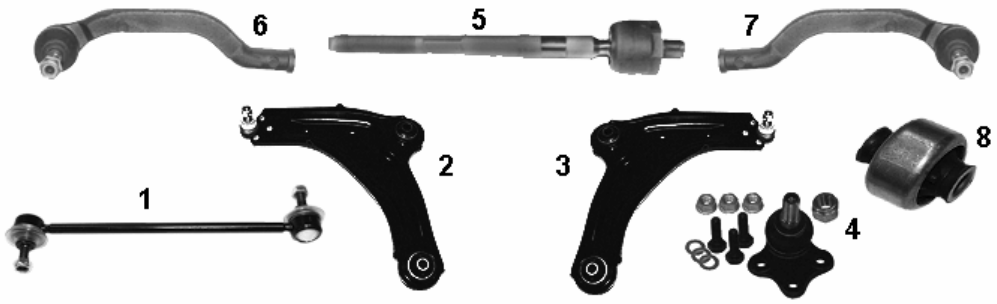


| NR | MAPCO | REF | | | ← | → | ↑ | ↓ | | | NEW | INFO |
|---|---|---|---|---|---|---|---|---|---|---|---|---|
| 1 | 49118HPS | 8200002870 | ✓ | | ✓ | ✓ | | | ✓ | ✓ | | |
| 2 | 49131 | 8200389134 | ✓ | | ✓ | | | | ✓ | ✓ | | |
| 3 | 49132 | 8200389135 | ✓ | | | ✓ | | | ✓ | ✓ | | |
| 4 | 49140 | 7701476576 | ✓ | | ✓ | ✓ | | ✓ | ✓ | ✓ | | |
| 5 | 49145 | 7701472766 | ✓ | | ✓ | ✓ | | | ✓ | ✓ | | M14x1,5 216 mm |
| 6 | 49143 | 7701049282 | ✓ | | ✓ | | | | ✓ | ✓ | | |
| 7 | 49144 | 7701049283 | ✓ | | | ✓ | | | ✓ | ✓ | | |
| 8 | 33122 | 8200002869 | ✓ | | ✓ | ✓ | | | ✓ | ✓ | ✓ | |

## RENAULT MASTER I

08/80 → 06/98

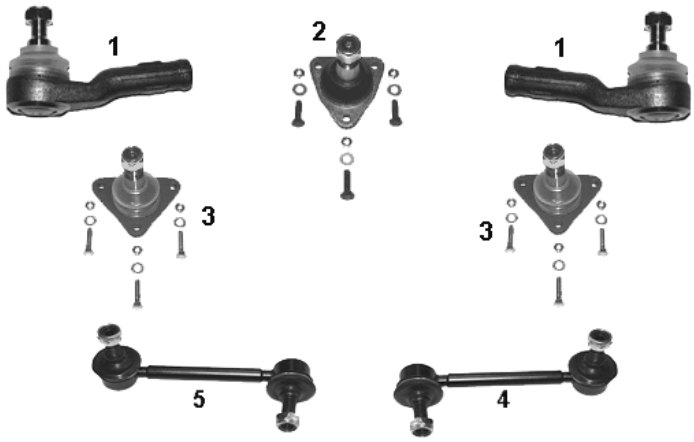


| NR | MAPCO | REF | | | ← | → | ↑ | ↓ | | | NEW | INFO |
|---|---|---|---|---|---|---|---|---|---|---|---|---|
| 1 | 49104 | 7701462427 | ✓ | | ✓ | ✓ | | | ✓ | ✓ | | M16x1,5RHT |
| 2 | 49105 | 7701462692 | ✓ | | ✓ | ✓ | ✓ | | ✓ | ✓ | | |
| 3 | 49106 | 7701462693 | ✓ | | ✓ | ✓ | | ✓ | ✓ | ✓ | | |
| 4 | 49108HPS | 7700309071 | ✓ | | | ✓ | | | ✓ | ✓ | | |
| 5 | 49109HPS | 7700309070 | ✓ | | ✓ | ✓ | | | ✓ | ✓ | | |

## RENAULT MASTER II

07/98 →

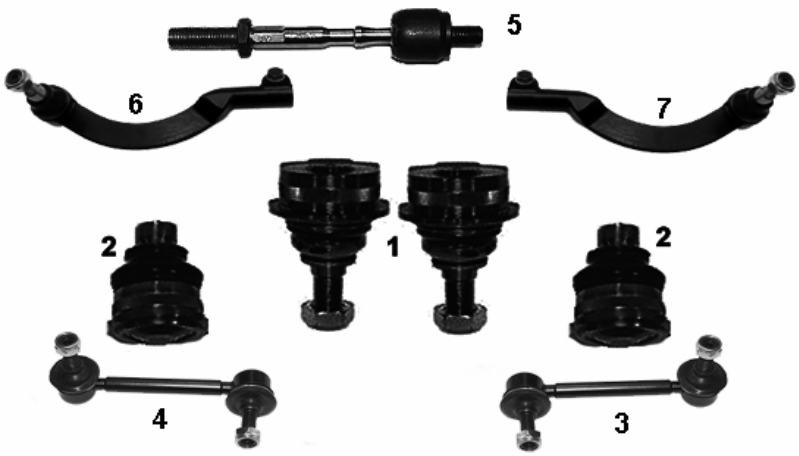


| NR | MAPCO | REF | | | ← | → | ↑ | ↓ | | | NEW | INFO |
|---|---|---|---|---|---|---|---|---|---|---|---|---|
| 1 | 49110 | 7700 312 851 | ✓ | | ✓ | ✓ | ✓ | | ✓ | ✓ | | |
| 2 | 49111 | 7700 312 852 | ✓ | | ✓ | ✓ | | ✓ | ✓ | ✓ | | |
| 3 | 49108HPS | 7700 309 071 | ✓ | | | ✓ | | | ✓ | ✓ | | |
| 4 | 49109HPS | 7700 309 070 | ✓ | | ✓ | | | | ✓ | ✓ | | |
| 5 | 49125 | 450 1261 | ✓ | | ✓ | ✓ | | | | ✓ | | |
| 6 | 49137 | 450 1262 | ✓ | | ✓ | | | | ✓ | ✓ | | (M16x1,5RHT) L= 225mm |
| 7 | 49138 | 4501 263 | ✓ | | | ✓ | | | ✓ | ✓ | | (M16x1,5RHT) L= 225mm |

## RENAULT MÉGANE + MÉGANE SCENIC I — 11/95→ 03/99

1

2

3

| NR | MAPCO | REF | | | ← | → | ↑ | ↓ | | | NEW | INFO |
|---|---|---|---|---|---|---|---|---|---|---|---|---|
| 1 | 36128 | | ✓ | | ✓ | ✓ | | | ✓ | ✓ | | |
| 2 | 36137 | | ✓ | | ✓ | ✓ | | | ✓ | ✓ | | |
| 3 | 36126 | | ✓ | | ✓ | ✓ | | | ✓ | ✓ | | |

## RENAULT MÉGANE 1.4 - 1.6 - 2.0 - 1.9D - 1.9TD - CABRIO — 1996→
## RENAULT MÉGANE SCENIC 1.4 - 1.6 - 2.0 - 1.9TD — 01/97→ 09/99

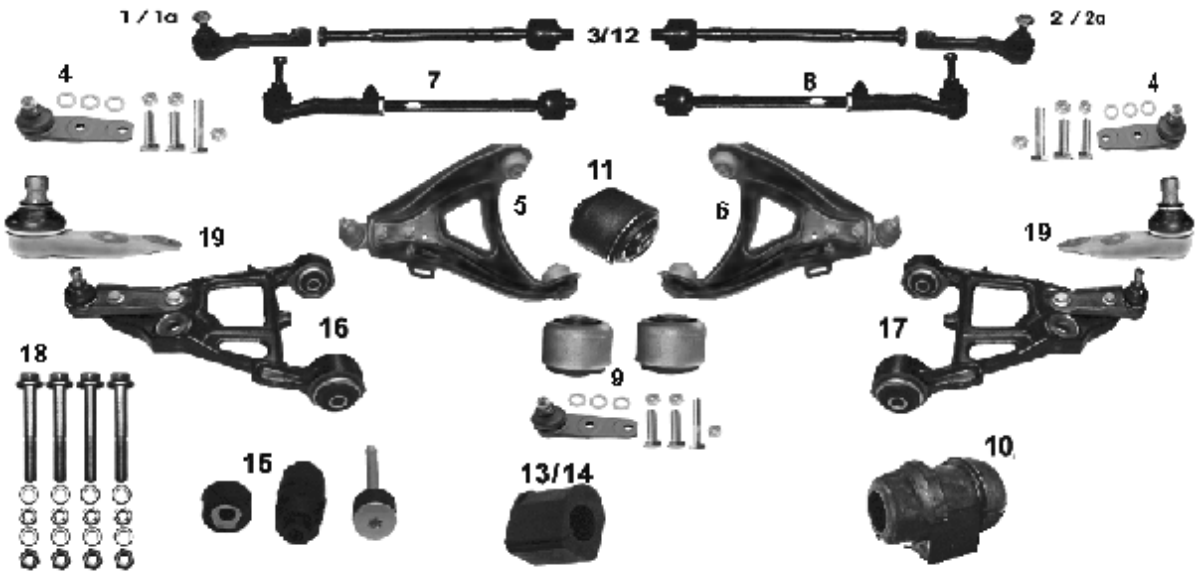


| NR | MAPCO | REF | | | ← | → | ↑ | ↓ | | | NEW | INFO |
|---|---|---|---|---|---|---|---|---|---|---|---|---|
| 1 | 19169 | 7701041311 | ✓ | | ✓ | | | | ✓ | ✓ | | →02/99 M14x1,5RHT |
| 1a | 49135 | 7701047415 | ✓ | | ✓ | | | | ✓ | ✓ | | 03/99→ 12,20mm M14x1,5RHT |
| 2 | 19170 | 7701041312 | ✓ | | | ✓ | | | ✓ | ✓ | | →02/99 M14x1,5RHT |
| 2a | 49136 | 7701474493 | ✓ | | | ✓ | | | ✓ | ✓ | | 03/99→ 12,20mm M14x1,5RHT |
| 3 | 49119 | 7701472087 | ✓ | | ✓ | ✓ | | | ✓ | ✓ | | **TRW** 285 mm M14x1,5RHT |
| 3 | 19171 | 7701469280 | ✓ | | ✓ | ✓ | | | ✓ | ✓ | | **TRW** 256 mm M14x1,5RHT |
| 4 | 19109 | 7701468883 | ✓ | | ✓ | ✓ | | | ✓ | ✓ | | STOP 1.9 dTi,1.9TDi , Scenic |
| 5 | 19147 | 7700831368 | ✓ | | ✓ | | | | ✓ | ✓ | | ✓ MÉGANE |
| 6 | 19148 | 7700831369 | ✓ | | | ✓ | | | ✓ | ✓ | | ✓ MÉGANE |
| 7 | 19172 | 7701468952 | ✓ | | ✓ | | | | ✓ | ✓ | | **1+3** **TRW** |
| 8 | 19173 | 7701468953 | ✓ | | | ✓ | | | ✓ | ✓ | | **2+3** **TRW** |
| 9 | 19210 | | ✓ | | ✓ | ✓ | | | ✓ | ✓ | | STOP 1.9 dTi,1.9TDi , Scenic **Kit** |
| 10 | 33145 | 7700784170 | ✓ | | ✓ | ✓ | | | ✓ | ✓ | | |
| 11 | 33146 | 7700840741 | ✓ | | ✓ | ✓ | | | ✓ | ✓ | | |
| 12 | 49103 | 7701469502 | ✓ | | ✓ | ✓ | | | ✓ | ✓ | | 256 mm **SMI** M12x1.0RHT |
| 13 | 33167 | 7700835929 | ✓ | | ✓ | ✓ | | | ✓ | ✓ | | ∅ 23 mm |
| 14 | 33118 | 7700785788 | ✓ | | ✓ | ✓ | | | ✓ | ✓ | | ∅ 23 mm |
| 15 | 33172 | 7700847382 | ✓ | | ✓ | ✓ | | | ✓ | ✓ | | |
| 16 | 49129 | 7700834916 | ✓ | | ✓ | | | | ✓ | ✓ | | ✓ 1.9 dTi,1.9TDi , ✓ Scenic |
| 17 | 49130 | 7700834917 | ✓ | | | ✓ | | | ✓ | ✓ | | ✓ 1.9 dTi,1.9TDi , ✓ Scenic |
| 18 | 95137 | | ✓ | | ✓ | ✓ | | | ✓ | ✓ | | MS |
| 19 | 49139 | 7700828843 | ✓ | | ✓ | ✓ | | | ✓ | ✓ | | ✓ 1.9 dTi,1.9TDi , ✓ Scenic |

## RENAULT MÉGANE II 11/02→
## RENAULT MÉGANE II 09/03→

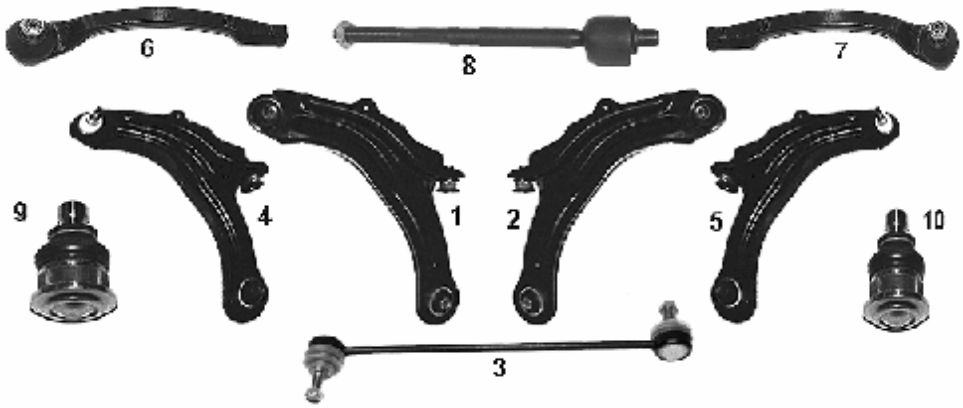


| NR | MAPCO | REF | | | ← | → | ↑ | ↓ | | | NEW | INFO |
|---|---|---|---|---|---|---|---|---|---|---|---|---|
| 1 | 49127 | 8200255760 | ✓ | | ✓ | | | | ✓ | ✓ | | ø = 16mm |
| 2 | 49128 | 8200255761 | ✓ | | | ✓ | | | ✓ | ✓ | | ø = 16mm |
| 3 | 49124 | 8200166159 | ✓ | | ✓ | ✓ | | | ✓ | ✓ | | |
| 4 | 49133 | 8200298454 | ✓ | | ✓ | | | | ✓ | ✓ | | ø = 18mm |
| 5 | 49134 | 8200298455 | ✓ | | | ✓ | | | ✓ | ✓ | | ø = 18mm |
| 6 | 49147 | 7701474795 | ✓ | | ✓ | | | | ✓ | ✓ | | |
| 7 | 49148 | 7701474796 | ✓ | | | ✓ | | | ✓ | ✓ | | |
| 8 | 49149 | 7701474448 part of | ✓ | | ✓ | ✓ | | | ✓ | ✓ | | |
| 9 | 49150 | 8200255761 part of | ✓ | | ✓ | ✓ | | | ✓ | ✓ | | ø = 16mm →01/03 |
| 10 | 49151 | 8200298455 part of | ✓ | | ✓ | ✓ | | | ✓ | ✓ | | ø = 18mm 02/03→ |

## RENAULT MODUS 12/04 →

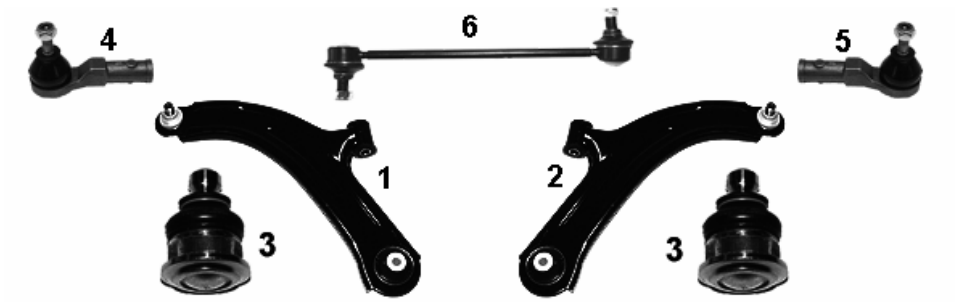


| NR | MAPCO | REF | | | ← | → | ↑ | ↓ | | | NEW | INFO |
|---|---|---|---|---|---|---|---|---|---|---|---|---|
| 1 | 59358 | 8200 346 941 | ✓ | | ✓ | | | ✓ | ✓ | ✓ | ✓ | |
| 2 | 59359 | 8200 346 942 | ✓ | | | ✓ | | ✓ | ✓ | ✓ | ✓ | |
| 3 | 49151 | 8200 298 455 part of | ✓ | | ✓ | ✓ | | | ✓ | ✓ | | ø = 18mm |
| 4 | 49135 | 7701 047 492 | ✓ | | ✓ | | | | ✓ | ✓ | | 12,20mm M14x1,5RHT |
| 5 | 49136 | 7701 474 493 | ✓ | | | ✓ | | | ✓ | ✓ | | 12,20mm M14x1,5RHT |
| 6 | 19120HPS | 8200 127 308 | ✓ | | ✓ | ✓ | | | ✓ | ✓ | ✓ | M10x1,25 L=248,0mm |
| | | | | | | | | | | | | |

## RENAULT R 4 - R 5 - R4 FOURGONETTE 10/62→ 04/86

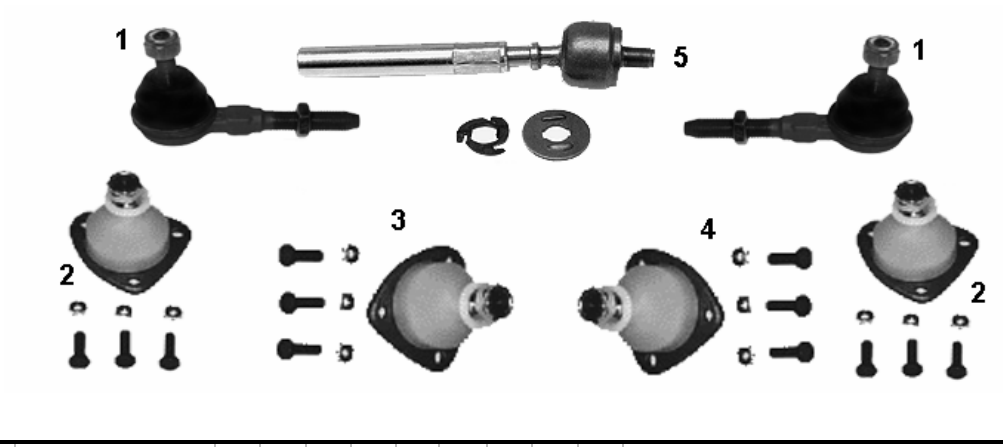


| NR | MAPCO | REF | | | ← | → | ↑ | ↓ | | | NEW | INFO |
|---|---|---|---|---|---|---|---|---|---|---|---|---|
| 1 | 19105 | 7701460955 | ✓ | | ✓ | ✓ | | | ✓ | ✓ | | M14x1,5RHT |
| 2 | 19102 | 7701451904 | ✓ | | ✓ | ✓ | | | ✓ | ✓ | | |
| 3 | 19122 | 7701463686 | ✓ | | ✓ | ✓ | | | ✓ | ✓ | | |
| 4 | 19123 | 7701463687 | ✓ | | ✓ | ✓ | | | ✓ | ✓ | | |
| 5 | 19103 | 7700656318 | ✓ | | ✓ | ✓ | | | ✓ | ✓ | | |

## RENAULT R4 10/62→ 12/92
## RENAULT R5 01/72→ 07/84
## RENAULT R6 06/68→ 12/92

| NR | MAPCO | REF | | | ← | → | ↑ | ↓ | | | NEW | INFO |
|---|---|---|---|---|---|---|---|---|---|---|---|---|
| 1 | 36138 | | ✓ | | ✓ | ✓ | | | ✓ | ✓ | | |
| 2 | 36139 | | ✓ | | ✓ | ✓ | | | ✓ | ✓ | | |
| 3 | 36140 | | ✓ | | ✓ | ✓ | | | ✓ | ✓ | | |

## RENAULT SUPER 5 EXPRESS / EXTRA(F40…) 10/84→ 12/96

| NR | MAPCO | REF | | | ← | → | ↑ | ↓ | | | NEW | INFO |
|---|---|---|---|---|---|---|---|---|---|---|---|---|
| 1 | 36131 | | ✓ | | ✓ | ✓ | | | ✓ | ✓ | | 1 |
| | | | | | | | | | | | | |

## RENAULT R 5 - SUPER 5 - EXPRESS - RODEO 10/84→12/96

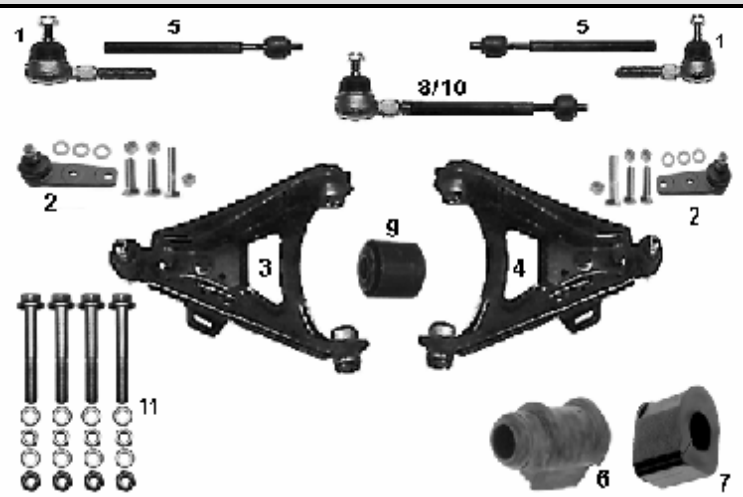


| NR | MAPCO | REF | | | ← | → | ↑ | ↓ | | | NEW | INFO |
|---|---|---|---|---|---|---|---|---|---|---|---|---|
| 1 | **19105** | 7701460955 | ✓ | | ✓ | ✓ | | | ✓ | ✓ | | → 09/84 M14x1,5RHT |
| 1 | **19108** | 7701464151 | ✓ | | ✓ | ✓ | | | ✓ | ✓ | | 09/84→ M14x1,5RHT |
| 2 | **19109** | 7701468883 | ✓ | | ✓ | ✓ | | | ✓ | ✓ | | |
| 3 | **19162** | 7700783455 | ✓ | | ✓ | | | | ✓ | ✓ | | |
| 4 | **19163** | 7700783456 | ✓ | | | ✓ | | | ✓ | ✓ | | |
| 5 | **19166/1** | 7701463346 | ✓ | | ✓ | ✓ | | | ✓ | ✓ | | |
| 6 | **33115** | 7700760265 | ✓ | | ✓ | ✓ | | | ✓ | ✓ | | Ø 20mm |
| 7 | **33116** | 7700763934 | ✓ | | ✓ | ✓ | | | ✓ | ✓ | | Ø 20mm |
| 8 | **19166** | | ✓ | | ✓ | ✓ | | | ✓ | ✓ | | → 1984 **19105 + 19166/1** |
| 9 | **33100** | 7704000681 | ✓ | | ✓ | ✓ | | | ✓ | ✓ | | 09/84→ |
| 10 | **49107** | | ✓ | | ✓ | ✓ | | | ✓ | ✓ | | **19108 + 19166/1** |
| 11 | **95137** | | ✓ | | ✓ | ✓ | | | ✓ | ✓ | | MS |

## RENAULT R 9 (L42) 09/81→ 12/88
## RENAULT R11 (B/C37) 03/83→ 07/89

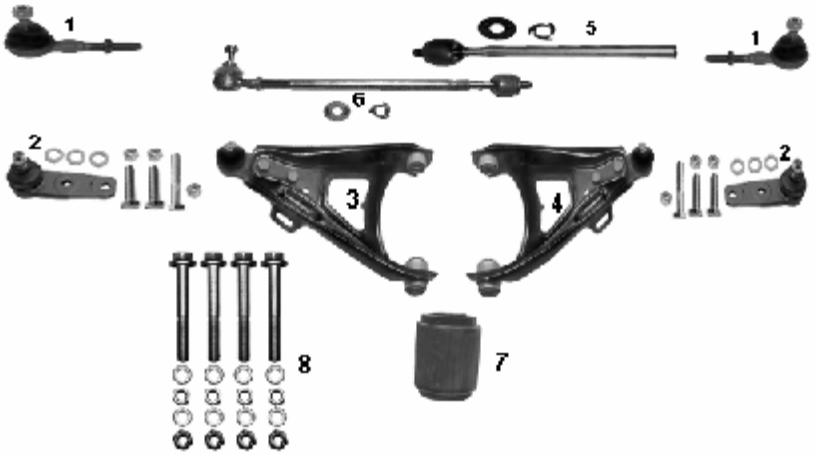


| NR | MAPCO | REF | | | ← | → | ↑ | ↓ | | | NEW | INFO |
|---|---|---|---|---|---|---|---|---|---|---|---|---|
| 1 | **19108** | 7701464151 | ✓ | | ✓ | ✓ | | | ✓ | ✓ | | M14x1,5RHT |
| 2 | **19109** | 7701462181 | ✓ | | ✓ | ✓ | | | ✓ | ✓ | | |
| 3 | **19124** | 7700783449 | ✓ | | ✓ | | | | ✓ | ✓ | | |
| 4 | **19125** | 7700783450 | ✓ | | | ✓ | | | ✓ | ✓ | | |
| 5 | **19121** | 7701462170 | ✓ | | ✓ | ✓ | | | ✓ | ✓ | | |
| 6 | **19106** | 7701462540 | ✓ | | ✓ | ✓ | | | ✓ | ✓ | | **1 + 5** |
| 7 | **33100** | 7704000681 | ✓ | | ✓ | ✓ | | | ✓ | ✓ | | |
| 8 | **95137** | | ✓ | | ✓ | ✓ | | | ✓ | ✓ | | MS |

## RENAULT R9/R11 — 09/81→ 12/89

| NR | MAPCO | REF | | | ← | → | ↑ | ↓ | | | NEW | INFO |
|---|---|---|---|---|---|---|---|---|---|---|---|---|
| 1 | 36120 | | ✓ | | ✓ | ✓ | | | ✓ | ✓ | | 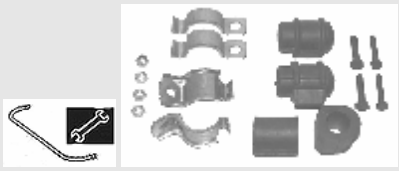 1 |

## RENAULT R18 (GTD - GTS - GTX - TD - TX - Turbo) — 04/78→ 07/86
## RENAULT FUEGO — 02/80→ 10/85

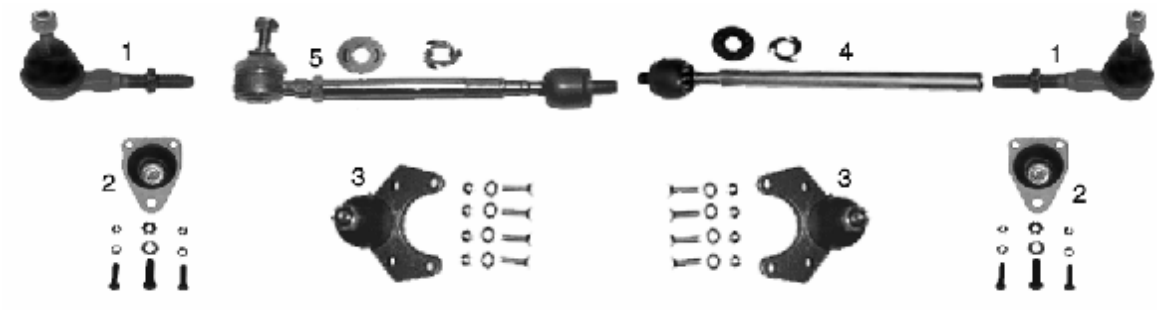


| NR | MAPCO | REF | | | ← | → | ↑ | ↓ | | | NEW | INFO |
|---|---|---|---|---|---|---|---|---|---|---|---|---|
| 1 | 19108 | 7701464151 | ✓ | | ✓ | ✓ | | | ✓ | ✓ | | M14x1,5RHT |
| 2 | 19116 | 7701461332 | ✓ | | ✓ | ✓ | ✓ | | ✓ | ✓ | | |
| 3 | 19115 | 7701461331 | ✓ | | ✓ | ✓ | | ✓ | ✓ | ✓ | | |
| 4 | 19107/1 | 7701463025 | ✓ | | ✓ | ✓ | | | ✓ | ✓ | | 220 mm |
| 5 | 19107 | 7701463025 | | | | | | | | | | 1 + 4 |

## RENAULT R19 B/C/L… — 09/88 → 12/95

1

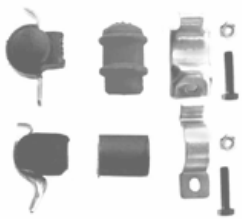
2

3

| NR | MAPCO | REF | | | ← | → | ↑ | ↓ | | | NEW | INFO |
|---|---|---|---|---|---|---|---|---|---|---|---|---|
| 1 | 36127 | | ✓ | | ✓ | ✓ | | | ✓ | ✓ | | |
| 2 | 36128 | | ✓ | | ✓ | ✓ | | | ✓ | ✓ | | |
| 3 | 36126 | | ✓ | | ✓ | ✓ | | | ✓ | ✓ | | |

## RENAULT R19 - R19 CHAMADE - R 19 16V 01/88→ 12/95

| NR | MAPCO | REF | | | ← | → | ↑ | ↓ | | | NEW | INFO |
|---|---|---|---|---|---|---|---|---|---|---|---|---|
| 1 | 19130 | 6000030047 | ✓ | | ✓ | | | | ✓ | ✓ | | M14x1,5RHT |
| 2 | 19130/1 | 6000030048 | ✓ | | | ✓ | | | ✓ | ✓ | | M14x1,5RHT |
| 3 | 19109 | 7701468883 | ✓ | | ✓ | ✓ | | | ✓ | ✓ | | |
| 4 | 19147 | 7700831368 | ✓ | | ✓ | | | | ✓ | ✓ | | STOP 16V |
| 5 | 19148 | 7700831369 | ✓ | | | ✓ | | | ✓ | ✓ | | STOP 16V |
| 6 | 19150 | 7701467235 | ✓ | | ✓ | | | | ✓ | ✓ | | |
| 7 | 19151 | 7701467237 | ✓ | | | ✓ | | | ✓ | ✓ | | |
| 8 | 19167 | 7700829841 | ✓ | | ✓ | | | | ✓ | ✓ | | ✓ 16V |
| 9 | 19168 | 7700829842 | ✓ | | | ✓ | | | ✓ | ✓ | | ✓ 16V |
| 10 | 19210 | | ✓ | | ✓ | ✓ | | | ✓ | ✓ | | Kit STOP 16V |
| 11 | 33145 | 7700784170 | ✓ | | ✓ | ✓ | | | ✓ | ✓ | | ∅ 18 mm |
| 12 | 33146 | 7700840741 | ✓ | | ✓ | ✓ | | | ✓ | ✓ | | |
| 13 | 33118 | 7700785788 | ✓ | | ✓ | ✓ | | | ✓ | ✓ | | ∅ 23 mm |
| 14 | 33117 | 7700771562 | ✓ | | ✓ | ✓ | | | ✓ | ✓ | | ∅ 21 mm |
| 15 | 95137 | | ✓ | | ✓ | ✓ | | | ✓ | ✓ | | MS |
| 16 | 19150/1 | 7701465917 part | ✓ | | ✓ | ✓ | | | ✓ | ✓ | | M14x1,5RHT L= 290 mm |

## RENAULT R20 (GTD - GTL - L - TD - TL 1981→12/83
## RENAULT R30 (TD) 02/75→03/86

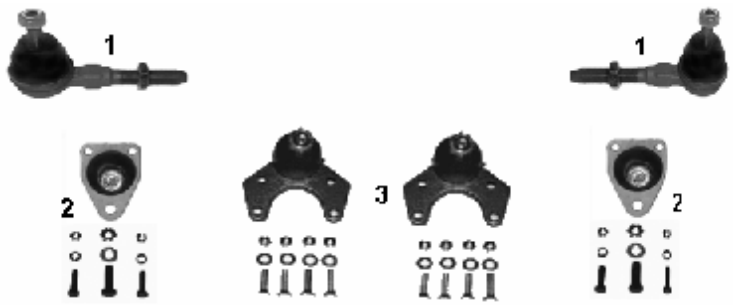


| NR | MAPCO | REF | | | ← | → | ↑ | ↓ | | | NEW | INFO |
|---|---|---|---|---|---|---|---|---|---|---|---|---|
| 1 | 19108 | 7701464151 | ✓ | | ✓ | ✓ | | | ✓ | ✓ | | M14x1,5RHT |
| 2 | 19116 | 7701461332 | ✓ | | ✓ | ✓ | ✓ | | ✓ | ✓ | | |
| 3 | 19115 | 7701461331 | ✓ | | ✓ | ✓ | | ✓ | ✓ | ✓ | | |

## RENAULT R21 1.4, 1.7, 1.9D+SD+GSD 03/86→ 12/95

| NR | MAPCO | REF | | | ← | → | ↑ | ↓ | | | NEW | INFO |
|---|---|---|---|---|---|---|---|---|---|---|---|---|
| 1 | 36124 | | ✓ | | ✓ | ✓ | | | ✓ | ✓ | | |
| 2 | 36125 | | ✓ | | ✓ | ✓ | | | ✓ | ✓ | | |

## RENAULT R21 2.1D, 2.1TD 03/86→ 12/95

| NR | MAPCO | REF | | | ← | → | ↑ | ↓ | | | NEW | INFO |
|---|---|---|---|---|---|---|---|---|---|---|---|---|
| 1 | 36121 | | ✓ | | ✓ | ✓ | | | ✓ | ✓ | | |
| 2 | 36122 | | ✓ | | ✓ | ✓ | | | ✓ | ✓ | | |

## RENAULT R21(K48) 2.0+ 2.2 03/86→ 06/94

| NR | MAPCO | REF | | | ← | → | ↑ | ↓ | | | NEW | INFO |
|---|---|---|---|---|---|---|---|---|---|---|---|---|
| 1 | 36129 | | ✓ | | ✓ | ✓ | | | ✓ | ✓ | | |
| 2 | 36130 | | ✓ | | ✓ | ✓ | | | ✓ | ✓ | | |

## RENAULT R21 + NEVADA 03/86→ 06/94

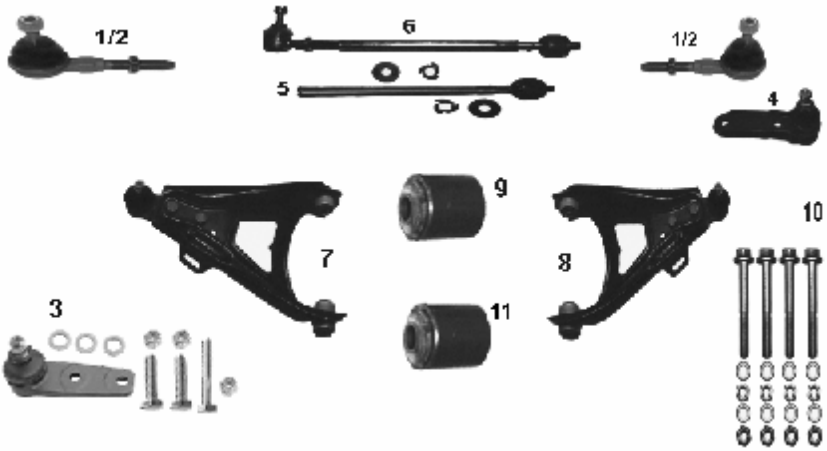


| NR | MAPCO | REF | | | ← | → | ↑ | ↓ | | | NEW | INFO |
|---|---|---|---|---|---|---|---|---|---|---|---|---|
| 1 | 19108 | 7701464151 | ✓ | | ✓ | ✓ | | | ✓ | ✓ | | ✓ Benzin / petrol M14x1,5RHT |
| 2 | 19131 | 7701464441 | ✓ | | ✓ | ✓ | | | ✓ | ✓ | | ✓ D M14x1,5RHT |
| 3 | 19109 | 7701468883 | ✓ | | ✓ | ✓ | | | ✓ | ✓ | | ✓ Benzin / petrol |
| 4 | 19132 | 7701464037 | ✓ | | ✓ | ✓ | | | ✓ | ✓ | | ✓ D |
| 5 | 19121 | | ✓ | | ✓ | ✓ | | | ✓ | ✓ | | |
| 6 | 19106 | 7701462540 | ✓ | | ✓ | ✓ | | | ✓ | ✓ | | 1 + 5 |
| 7 | 19124 | 7700783449 | ✓ | | ✓ | | | | ✓ | ✓ | | |
| 8 | 19125 | 7700783450 | ✓ | | | ✓ | | | ✓ | ✓ | | |
| 9 | 33102 | 7700722687 | ✓ | | ✓ | ✓ | | | ✓ | ✓ | | L= 39,0 mm |
| 10 | 95137 | | ✓ | | ✓ | ✓ | | | ✓ | ✓ | | MS |
| 11 | 33101 | 7700754515 | ✓ | | ✓ | ✓ | | | ✓ | ✓ | | L= 37,0 mm |

## RENAULT R25 04/84→12/93

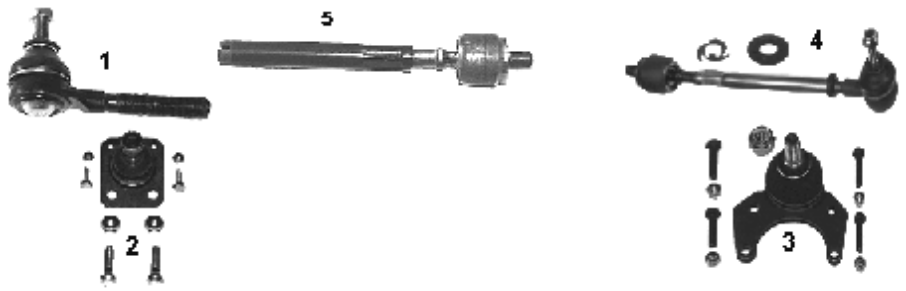


| NR | MAPCO | REF | | | ← | → | ↑ | ↓ | | | NEW | INFO |
|---|---|---|---|---|---|---|---|---|---|---|---|---|
| 1 | 19108 | 7701464151 | ✓ | | ✓ | ✓ | | | ✓ | ✓ | | M14x1,5RHT |
| 2 | 19127 | 7701463229 | ✓ | | ✓ | ✓ | ✓ | | ✓ | ✓ | | |
| 3 | 19128 | 7701465689 | ✓ | | ✓ | ✓ | | ✓ | ✓ | ✓ | | |
| 4 | 19126 | 7701646313 | ✓ | | ✓ | ✓ | | | ✓ | ✓ | | 1 + 5 |
| 5 | 19198 | 7701469229 | ✓ | | ✓ | ✓ | | | ✓ | ✓ | | 190 mm |

## RENAULT SAFRANE 04/95→12/00

| NR | MAPCO | REF | | | ← | → | ↑ | ↓ | | | NEW | INFO |
|---|---|---|---|---|---|---|---|---|---|---|---|---|
| 1 | 19144 | 6000022714 | ✓ | | ✓ | | | | ✓ | ✓ | | M14x1,5RHT |
| 2 | 19145 | 6000022715 | ✓ | | | ✓ | | | ✓ | ✓ | | M14x1,5RHT |
| 3 | 19143 | 7700829322 | ✓ | | ✓ | ✓ | | | ✓ | ✓ | | |
| 4 | 19186 | 7700807580 | ✓ | | ✓ | | | | ✓ | ✓ | | |
| 5 | 19187 | 7700807581 | ✓ | | | ✓ | | | ✓ | ✓ | | |
| 6 | 19164HPS | 7700805494 | ✓ | | ✓ | ✓ | | | ✓ | ✓ | | |
| 7 | 19188 | 7701469569 | ✓ | | ✓ | ✓ | | | ✓ | ✓ | | |
| 8 | 33171 | 7700806239 | ✓ | | ✓ | ✓ | | | ✓ | ✓ | | |
| 9 | 33170 | 7700806238 | ✓ | | ✓ | ✓ | | | ✓ | ✓ | | |
| 10 | 19216 | | ✓ | | ✓ | ✓ | | | ✓ | ✓ | | Kit |

## RENAULT SCENIC (JA) 09/99→

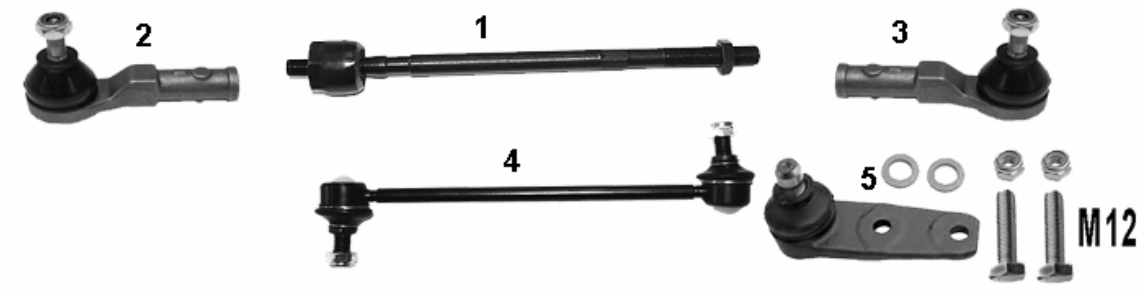


| NR | MAPCO | REF | | | ← | → | ↑ | ↓ | | | NEW | INFO |
|---|---|---|---|---|---|---|---|---|---|---|---|---|
| 1 | 49126 | 7701471844 | ✓ | | ✓ | ✓ | | | ✓ | | | SMI |
| 2 | 49135 | 7701047492 | ✓ | | ✓ | | | | ✓ | ✓ | | 12,20mm M14x1,5RHT SMI |
| 3 | 49136 | 7701474493 | ✓ | | | ✓ | | | ✓ | ✓ | | 12,20mm M14x1,5RHT SMI |
| 4 | 49146HPS | 7700437136 | ✓ | | ✓ | ✓ | | | ✓ | ✓ | | 1.9 dCi + 2.0 16V 258,00 mm |
| 5 | 19109/2 | 7700430766S1 | ✓ | | ✓ | ✓ | | | ✓ | ✓ | ✓ | Ø 12mm |

## RENAULT TRAFIC 03/80→ 05/97

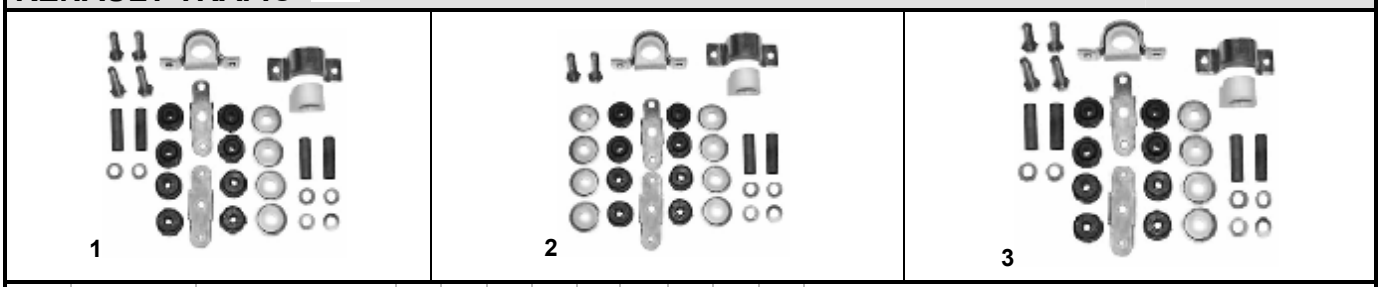


| NR | MAPCO | REF | | | ← | → | ↑ | ↓ | | | NEW | INFO |
|---|---|---|---|---|---|---|---|---|---|---|---|---|
| 1 | 36143 | | ✓ | | ✓ | ✓ | | | ✓ | ✓ | | |
| 2 | 36144 | | ✓ | | ✓ | ✓ | | | ✓ | ✓ | | |
| 3 | 36145 | | ✓ | | ✓ | ✓ | | | ✓ | ✓ | | |

## RENAULT TRAFIC 03/80→03/01

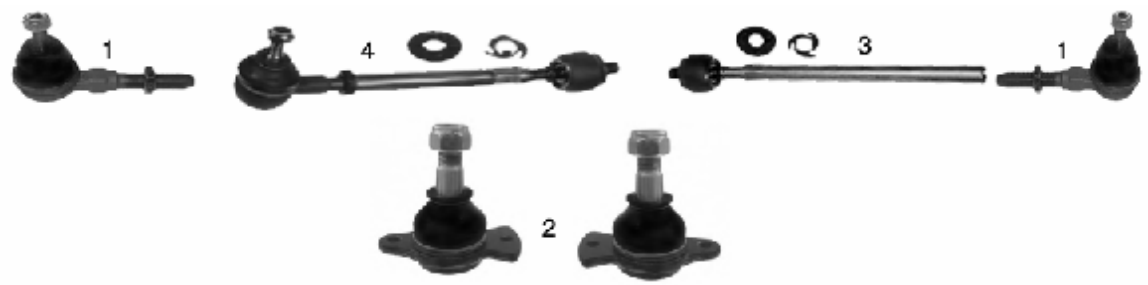


| NR | MAPCO | REF | | | ← | → | ↑ | ↓ | | | NEW | INFO |
|---|---|---|---|---|---|---|---|---|---|---|---|---|
| 1 | 19136 | 7701461770 | ✓ | | ✓ | ✓ | | | ✓ | ✓ | | M14x1,5RHT |
| 2 | 19135 | 7701461667 | ✓ | | ✓ | ✓ | | | ✓ | ✓ | | |
| 3 | 19129/1 | | ✓ | | ✓ | ✓ | | | ✓ | ✓ | | |
| 4 | 19129 | 7701463035 | ✓ | | ✓ | ✓ | | | ✓ | ✓ | | 1 + 3 |

## RENAULT TRAFIC ( _L ) 03/01→

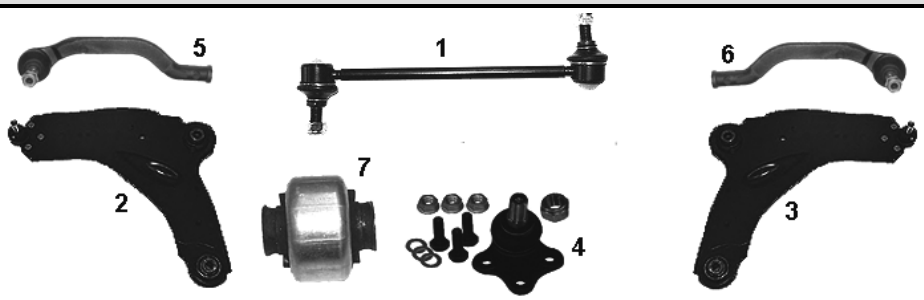


| NR | MAPCO | REF | | | ← | → | ↑ | ↓ | | | NEW | INFO |
|---|---|---|---|---|---|---|---|---|---|---|---|---|
| 1 | 49118HPS | 8200 002 870 | ✓ | | ✓ | ✓ | | | ✓ | ✓ | | |
| 2 | 49141 | 8200 054 003 | ✓ | | ✓ | | | ✓ | ✓ | ✓ | ✓ | |
| 3 | 49142 | 8200 054 006 | ✓ | | | ✓ | | ✓ | ✓ | ✓ | ✓ | |
| 4 | 49140 | 7701476576 | ✓ | | ✓ | ✓ | | ✓ | ✓ | ✓ | | |
| 5 | 49143 | 7701049282 | ✓ | | ✓ | | | | ✓ | ✓ | ✓ | |
| 6 | 49144 | 7701049283 | ✓ | | | ✓ | | | ✓ | ✓ | ✓ | |
| 7 | 33122 | 8200002869 | ✓ | | ✓ | ✓ | | | ✓ | ✓ | ✓ | |

## RENAULT TWINGO ( C06_) 1993→

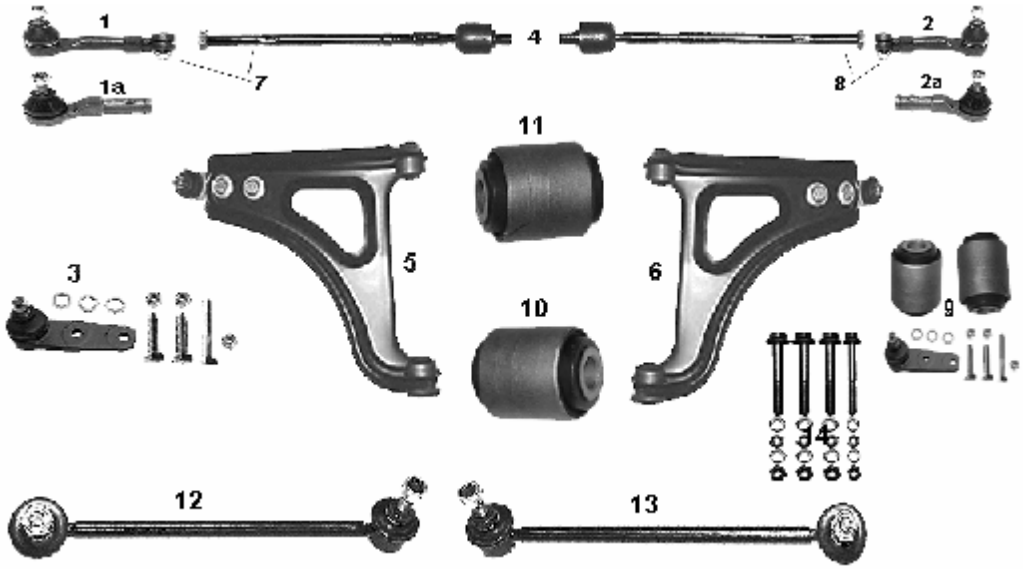


| NR | MAPCO | REF | | | ← | → | ↑ | ↓ | | | NEW | INFO |
|---|---|---|---|---|---|---|---|---|---|---|---|---|
| 1 | 19139 | 6000022730 | ✓ | | ✓ | | | | ✓ | ✓ | | 1.2 16V M14x1,5RHT |
| 1a | 49135 | 7701047492 | ✓ | | ✓ | | | | ✓ | ✓ | | ✓ 1.2 16V 12,20mm M14x1,5RHT |
| 2 | 19140 | 6000022731 | ✓ | | | ✓ | | | ✓ | ✓ | | 1.2 16V M14x1,5RHT |
| 2a | 49136 | 7701474493 | ✓ | | | ✓ | | | ✓ | ✓ | | ✓ 1.2 16V 12,20mm M14x1,5RHT |
| 3 | 19109 | 7701468883 | ✓ | | ✓ | ✓ | | | ✓ | ✓ | | |
| 4 | 19149 | 7701469517 | ✓ | | ✓ | ✓ | | | ✓ | ✓ | | |
| 5 | 19157 | 7700820028 | ✓ | | ✓ | | | | ✓ | ✓ | | |
| 6 | 19158 | 7700820029 | ✓ | | | ✓ | | | ✓ | ✓ | | |
| 7 | 19160 | 7701467218 | ✓ | | ✓ | | | | ✓ | ✓ | | **1 + 4** |
| 8 | 19159 | 7701467219 | ✓ | | | ✓ | | | ✓ | ✓ | | **2 + 4** |
| 9 | 19211 | | ✓ | | ✓ | ✓ | | | ✓ | ✓ | | Kit |
| 10 | 33143 | 700813364 | ✓ | | ✓ | ✓ | | | ✓ | ✓ | | |
| 11 | 33144 | 700819829 | ✓ | | ✓ | ✓ | | | ✓ | ✓ | | |
| 12 | 49120HPS | 8200040618 | ✓ | | ✓ | | | | ✓ | ✓ | | 2002→ |
| 13 | 49121HPS | 8200050191 | ✓ | | | ✓ | | | ✓ | ✓ | | 2002→ |
| 14 | 95137 | | ✓ | | ✓ | ✓ | | | ✓ | ✓ | | Chassis VF1C0680520043526-> MS |

## RENAULT VEL SATIS 06/02→

| NR | MAPCO | REF | | | ← | → | ↑ | ↓ | | | NEW | INFO |
|---|---|---|---|---|---|---|---|---|---|---|---|---|
| 1 | 49143 | 7701049282 | ✓ | | ✓ | | | | ✓ | ✓ | | |
| 2 | 49144 | 7701049283 | ✓ | | | ✓ | | | ✓ | ✓ | | |
| 3 | 49118HPS | 8200 002 870 | ✓ | | ✓ | ✓ | | | ✓ | ✓ | | |
| 4 | 49140 | 7701476576 | ✓ | | ✓ | ✓ | | ✓ | ✓ | ✓ | | |
| 5 | 33122 | 8200002869 | ✓ | | ✓ | ✓ | | | ✓ | ✓ | ✓ | |

# ROVER

## ROVER AUSTIN METRO 10/80→ 04/90

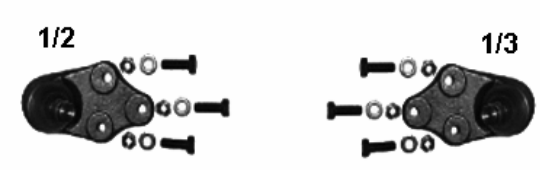


| NR | MAPCO | REF | | | ← | → | ↑ | ↓ | | | NEW | INFO |
|---|---|---|---|---|---|---|---|---|---|---|---|---|
| 1 | 19949 | GSJ729 | ✓ | | ✓ | ✓ | | | ✓ | ✓ | | ✓ 155 TYRES |
| 2 | 19955 | GSJ731 | ✓ | | ✓ | | | | ✓ | ✓ | | ✓ 185 TYRES |
| 3 | 19954 | GSJ730 | ✓ | | | ✓ | | | ✓ | ✓ | | ✓ 185 TYRES |

## ROVER MG METRO 1984→ 1990

| NR | MAPCO | REF | | | ← | → | ↑ | ↓ | | | NEW | INFO |
|---|---|---|---|---|---|---|---|---|---|---|---|---|
| 2 | 19951 | GSJ207 | ✓ | | ✓ | ✓ | | | ✓ | ✓ | | → 09/84 |

## ROVER 100 — 03/90→12/98

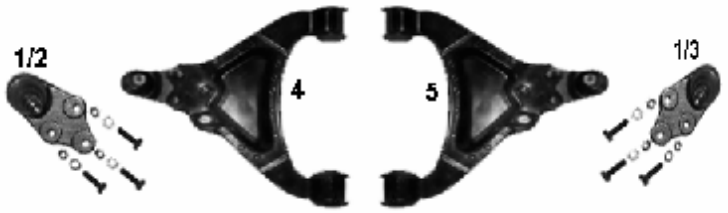


| NR | MAPCO | REF | | | ← | → | ↑ | ↓ | | | NEW | INFO |
|---|---|---|---|---|---|---|---|---|---|---|---|---|
| 1 | 19949 | GSJ729 | ✓ | | ✓ | ✓ | | | ✓ | ✓ | | ✓ 155 TYRES |
| 2 | 19955 | GSJ731 | ✓ | | ✓ | | | | ✓ | ✓ | | ✓ 185 TYRES |
| 3 | 19954 | GSJ730 | ✓ | | | ✓ | | | ✓ | ✓ | | ✓ 185 TYRES |
| 4 | 49903 | GSJ415 | ✓ | | ✓ | | | | ✓ | ✓ | | 1990 → |
| 5 | 49904 | GSJ416 | ✓ | | | ✓ | | | ✓ | ✓ | | 1990 → |

## ROVER 200 (XH) — 09/85→10/89

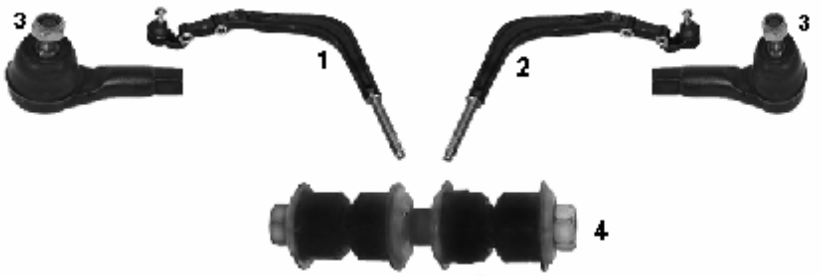


| NR | MAPCO | REF | | | ← | → | ↑ | ↓ | | | NEW | INFO |
|---|---|---|---|---|---|---|---|---|---|---|---|---|
| 1 | 59330 | 51361-SB2-013 | ✓ | | ✓ | | | ✓ | ✓ | ✓ | | |
| 2 | 59331 | 51351-SB2-013 | ✓ | | | ✓ | | ✓ | ✓ | ✓ | | |
| 3 | 59319 | 53540-611-020 | ✓ | | ✓ | ✓ | | | ✓ | ✓ | | M12x1,25 RHT |
| 4 | 19958 | KHC10011 | ✓ | | ✓ | ✓ | | | ✓ | ✓ | | |

## ROVER 200 214 - 216 - 218 — 10/89→03/00

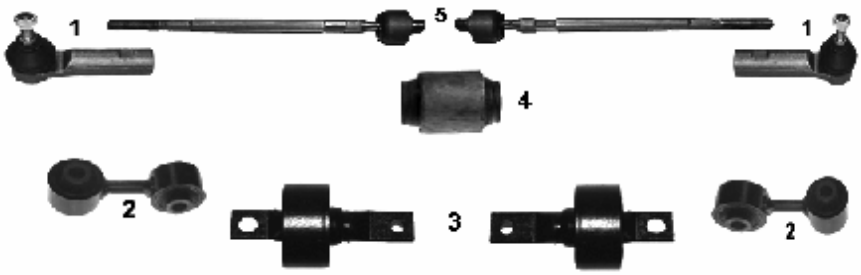


| NR | MAPCO | REF | | | ← | → | ↑ | ↓ | | | NEW | INFO |
|---|---|---|---|---|---|---|---|---|---|---|---|---|
| 1 | 19956 | GSJ826 | ✓ | | ✓ | ✓ | | | ✓ | ✓ | | M14x1,5RHT |
| 2 | 19957 | EGP1662 | ✓ | | ✓ | ✓ | | | ✓ | ✓ | | 11/89→ |
| 3 | 33223 | RGX10007 | | ✓ | ✓ | ✓ | | | ✓ | ✓ | | |
| 4 | 33960 | EGP1673 | ✓ | | ✓ | ✓ | | | ✓ | ✓ | | |
| 5 | 49911 | GSV1170 | ✓ | | ✓ | ✓ | | | ✓ | ✓ | | 01/95→ |
| | | | | | | | | | | | | |

## ROVER 400 414 - 416 - 420 TD — 04/90→ 1995
## ROVER 400 TOURER — 1996→ 2000

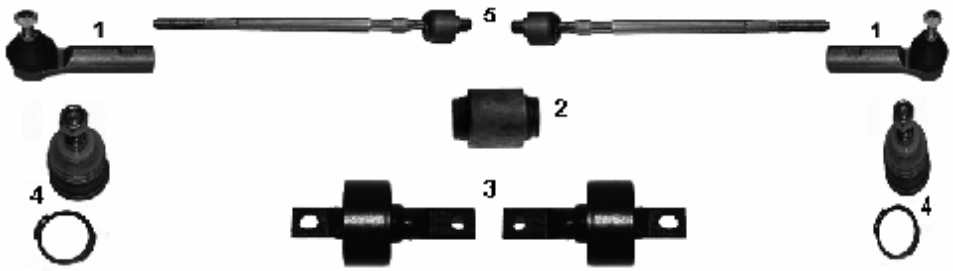


| NR | MAPCO | REF | | | ← | → | ↑ | ↓ | | | NEW | INFO |
|---|---|---|---|---|---|---|---|---|---|---|---|---|
| 1 | 19956 | GSJ826 | ✓ | | ✓ | ✓ | | | ✓ | ✓ | | M14x1,5RHT |
| 2 | 33960 | EGP1673 | ✓ | | ✓ | ✓ | | | ✓ | ✓ | | |
| 3 | 33223 | RGX10007 | | ✓ | ✓ | ✓ | | | ✓ | ✓ | | |
| 4 | 19507 | GSJ1002 | ✓ | | ✓ | ✓ | ✓ | | ✓ | ✓ | | |
| 5 | 49911 | GSV1170 | ✓ | | ✓ | ✓ | | | ✓ | ✓ | | |

## ROVER 400 414 - 416 - 420 TD — 1995→ 2000

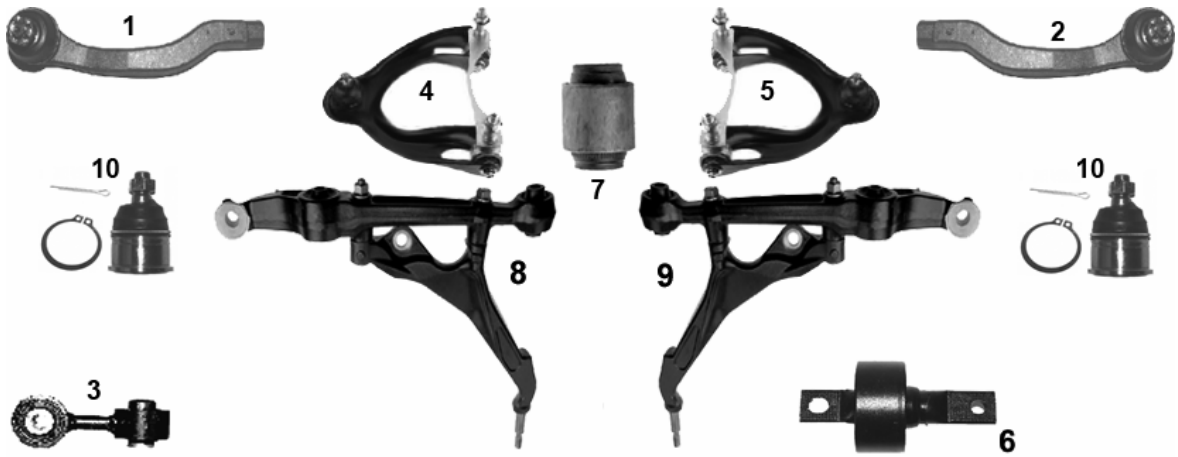


| NR | MAPCO | REF | | | ← | → | ↑ | ↓ | | | NEW | INFO |
|---|---|---|---|---|---|---|---|---|---|---|---|---|
| 1 | 19508 | GSJ496 | ✓ | | ✓ | | | | ✓ | ✓ | | M14x1,5RHT |
| 2 | 19509 | GSJ495 | ✓ | | | ✓ | | | ✓ | ✓ | | M14x1,5RHT |
| 3 | 19957 | EGP1662 | ✓ | | | ✓ | | | ✓ | ✓ | | |
| 4 | 49502 | GSJ485 | ✓ | | ✓ | | ✓ | | ✓ | ✓ | | |
| 5 | 49503 | GSJ486 | ✓ | | | ✓ | ✓ | | ✓ | ✓ | | |
| 6 | 33223 | RGX10007 | | ✓ | ✓ | ✓ | | | ✓ | ✓ | | |
| 7 | 33960 | EGP1673 | ✓ | | ✓ | ✓ | | | ✓ | ✓ | | |
| 8 | 49215 | GSJ836 | ✓ | | ✓ | | | | ✓ | ✓ | | |
| 9 | 49216 | GSJ835 | ✓ | | | ✓ | | | ✓ | ✓ | | |
| 10 | 49510 | GSJ499 | ✓ | | ✓ | ✓ | | ✓ | ✓ | ✓ | | |

## ROVER 600

1993→ 1999

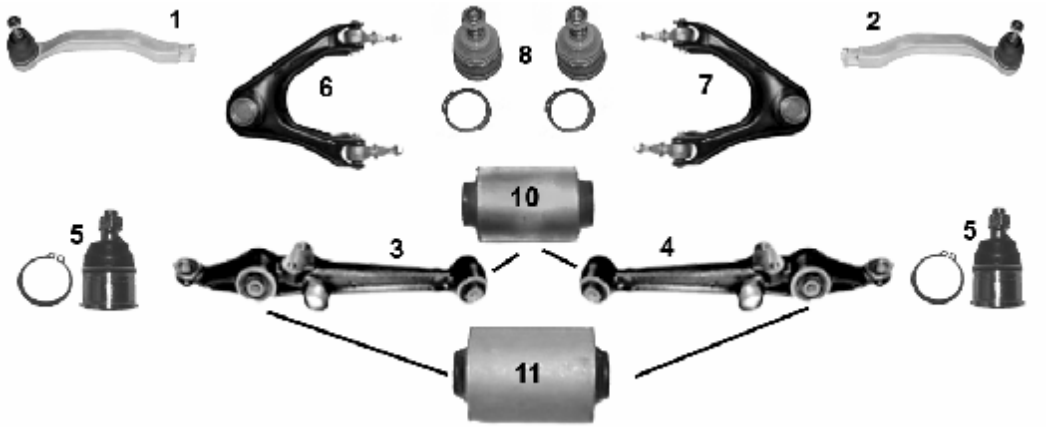


| NR | MAPCO | REF | | | ← | → | ↑ | ↓ | | | NEW | INFO |
|---|---|---|---|---|---|---|---|---|---|---|---|---|
| 1 | 19504 | GSJ407 | ✓ | | ✓ | | | | ✓ | ✓ | | M14x1,5RHT |
| 2 | 19505 | GSJ408 | ✓ | | | ✓ | | | ✓ | ✓ | | M14x1,5RHT |
| 3 | 49209 | RBJ100720 | ✓ | | ✓ | | | ✓ | ✓ | ✓ | | |
| 4 | 49210 | RBJ100690 | ✓ | | | ✓ | | ✓ | ✓ | ✓ | | |
| 5 | 49515 | GSJ404 | ✓ | | ✓ | ✓ | | ✓ | ✓ | ✓ | | |
| 6 | 49205 | GSJ423 | ✓ | | ✓ | | ✓ | | ✓ | ✓ | | |
| 7 | 49206 | GSJ424 | ✓ | | | ✓ | ✓ | | ✓ | ✓ | | |
| 8 | 19507 | GSJ1002 | ✓ | | ✓ | ✓ | ✓ | | ✓ | ✓ | | |
| 10 | 33522 | 51393-SE0-003 | ✓ | | ✓ | ✓ | | ✓ | ✓ | ✓ | | |
| 11 | 33522 | 51393-SE0-003 | ✓ | | ✓ | ✓ | | ✓ | ✓ | ✓ | | |

## ROVER 800

10/86→02/99

| NR | MAPCO | REF | | | ← | → | ↑ | ↓ | | | NEW | INFO |
|---|---|---|---|---|---|---|---|---|---|---|---|---|
| 1 | 59371 | GSJ 279 | ✓ | | ✓ | | | | ✓ | ✓ | ✓ | M12x1,25 RHT Konus 14,0 mm |
| 2 | 59372 | GSJ 280 | ✓ | | | ✓ | | | ✓ | ✓ | ✓ | M12x1,25 RHT Konus 14,0 mm |
| | | | | | | | | | | | | |

## ROVER 25

1999 →

| NR | MAPCO | REF | | | ← | → | ↑ | ↓ | | | NEW | INFO |
|---|---|---|---|---|---|---|---|---|---|---|---|---|
| 1 | 19956 | GSJ 288 | ✓ | | ✓ | ✓ | | | ✓ | ✓ | | |
| 2 | 19957 | EGP1662 | ✓ | | ✓ | ✓ | | | ✓ | ✓ | | |

## ROVER 45 (RT) 02/00 →

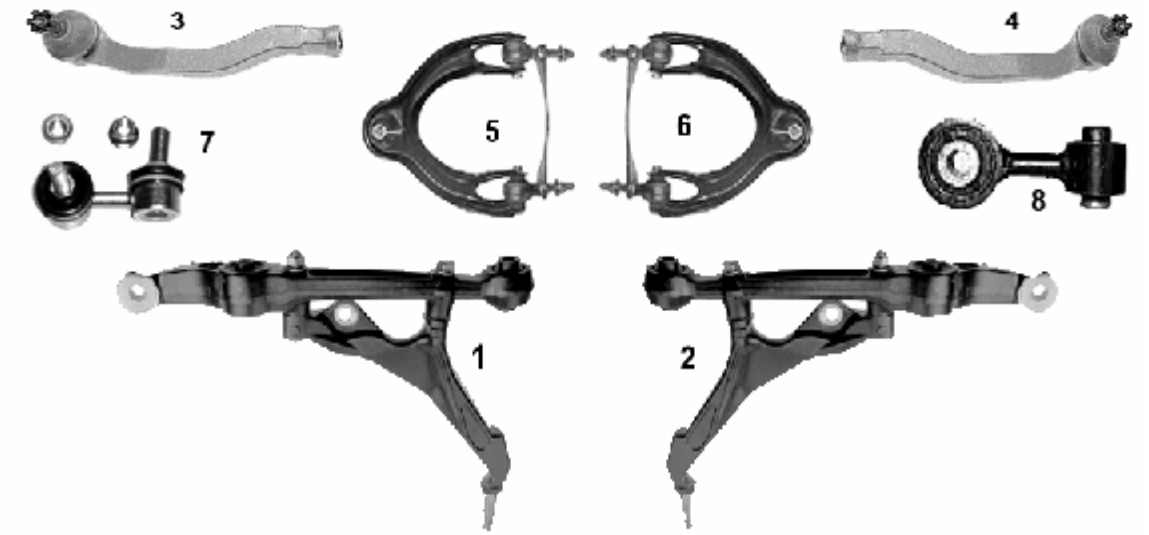


| NR | MAPCO | REF | | | ← | → | ↑ | ↓ | | | NEW | INFO |
|---|---|---|---|---|---|---|---|---|---|---|---|---|
| 1 | 49215 | GSJ836 | ✓ | | ✓ | | | ✓ | ✓ | ✓ | | |
| 2 | 49216 | GSJ835 | ✓ | | | ✓ | | ✓ | ✓ | ✓ | | |
| 3 | 19500 | GSJ1170 | ✓ | | ✓ | | | | ✓ | ✓ | | |
| 4 | 19501 | GSJ1169 | ✓ | | | ✓ | | | ✓ | ✓ | | |
| 5 | 59508 | RBJ102130 | ✓ | | ✓ | | ✓ | | ✓ | ✓ | | |
| 6 | 59509 | RBJ102120 | ✓ | | | ✓ | ✓ | | ✓ | ✓ | | |
| 7 | 49510 | GSJ499 | ✓ | | ✓ | ✓ | | | ✓ | ✓ | | |
| 8 | 19957 | EGP1662 | ✓ | | ✓ | ✓ | | | ✓ | ✓ | | |

## ROVER 75(RJ) 02/99→
## ROVER 75 Tourer (RJ) 08/01→

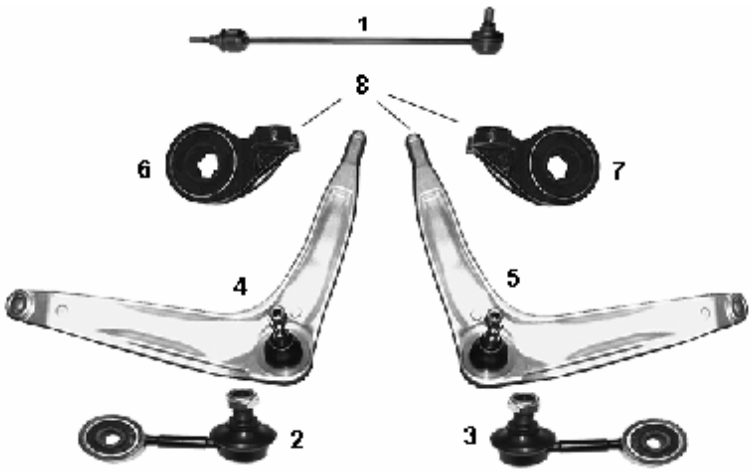


| NR | MAPCO | REF | | | ← | → | ↑ | ↓ | | | NEW | INFO |
|---|---|---|---|---|---|---|---|---|---|---|---|---|
| 1 | 59516 | RBM-100240 | ✓ | | ✓ | ✓ | | | ✓ | ✓ | | |
| 2 | 59517 | RGD 100571 | | ✓ | | ✓ | | | ✓ | ✓ | | |
| 3 | 59518 | RGD 100561 | | ✓ | ✓ | | | | ✓ | ✓ | | |
| 4 | 51690 | GSJ1000 | ✓ | | ✓ | | | ✓ | ✓ | ✓ | ✓ | |
| 5 | 51691 | GSJ1001 | ✓ | | | ✓ | | ✓ | ✓ | ✓ | ✓ | |
| 6 | 36961 | RBX101760 | ✓ | | ✓ | | | ✓ | ✓ | ✓ | ✓ | |
| 7 | 36962 | RBX101770 | ✓ | | | ✓ | | ✓ | ✓ | ✓ | ✓ | |
| 8 | 53690 | | ✓ | | ✓ | ✓ | | ✓ | ✓ | ✓ | ✓ | axle kit |

# SAAB

## SAAB 900 I — 1979 → 1992

| NR | MAPCO | REF | | | ← | → | ↑ | ↓ | | | NEW | INFO |
|---|---|---|---|---|---|---|---|---|---|---|---|---|
| 1 | 19982 | 8993354 | ✓ | | ✓ | ✓ | | | ✓ | ✓ | | |
| 2 | 19983 | 8993388 | ✓ | | ✓ | ✓ | | | ✓ | ✓ | | 19,2 mm |

## SAAB 900 II — 07/93 → 12/98

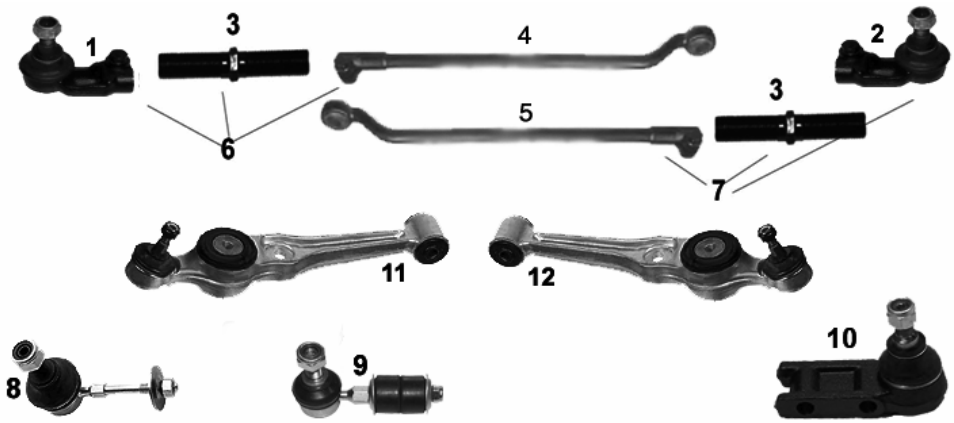


| NR | MAPCO | REF | | | ← | → | ↑ | ↓ | | | NEW | INFO |
|---|---|---|---|---|---|---|---|---|---|---|---|---|
| 1 | 19610 | 4242749 | ✓ | | ✓ | | | | ✓ | ✓ | | |
| 2 | 19611 | 4242756 | ✓ | | | ✓ | | | ✓ | ✓ | | |
| 3 | 49604 | 4242731 | ✓ | | ✓ | ✓ | | | ✓ | ✓ | | |
| 4 | 49752 | 4242673 | ✓ | | ✓ | | | | ✓ | ✓ | | |
| 5 | 49753 | 4242681 | ✓ | | | ✓ | | | ✓ | ✓ | | |
| 6 | 49750 | 4242681S1 | ✓ | | ✓ | | | | ✓ | ✓ | | |
| 7 | 49751 | 4242673S1 | ✓ | | | ✓ | | | ✓ | ✓ | | |
| 8 | 19607 | 350263 | ✓ | | ✓ | ✓ | | | ✓ | ✓ | | |
| 9 | 19607/8HPS | 350263S1 | ✓ | | ✓ | ✓ | | | ✓ | ✓ | | |
| 10 | 19983 | 8993388 | ✓ | | ✓ | ✓ | | | ✓ | ✓ | | 19,2 mm |
| 11 | 19984 | 454 3450 | ✓ | | ✓ | | | ✓ | ✓ | ✓ | | Chassis S2012272 -> |
| 12 | 19985 | 454 3468 | ✓ | | | ✓ | | ✓ | ✓ | ✓ | | Chassis S2012272 -> |
| | | | | | | | | | | | | |
| | | | | | | | | | | | | |

## SAAB 9000 — 04/85 →12/98

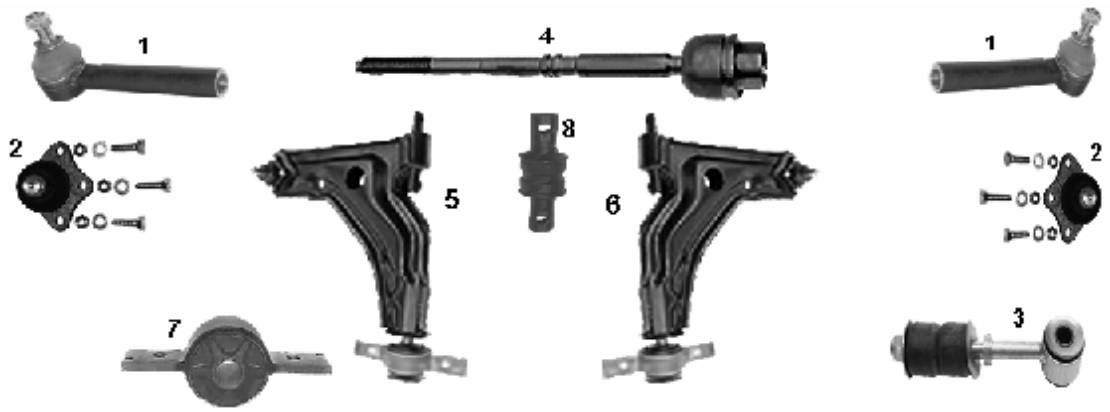


| NR | MAPCO | REF | | | ← | → | ↑ | ↓ | | | NEW | INFO |
|---|---|---|---|---|---|---|---|---|---|---|---|---|
| 1 | 19981 | 8993453 | ✓ | | ✓ | ✓ | | | ✓ | ✓ | | M14x1,5RHT |
| 2 | 19980 | 8972135 | ✓ | | ✓ | ✓ | | | ✓ | ✓ | | |
| 3 | 49980 | 8958944 | ✓ | | ✓ | ✓ | | | ✓ | ✓ | | |
| 4 | 49606 | 8962250 | ✓ | | ✓ | ✓ | | | ✓ | ✓ | | M14x1,5RHT 322 mm |
| 5 | 49981 | 8958373 | ✓ | | ✓ | | | | ✓ | ✓ | | |
| 6 | 49982 | 8958365 | ✓ | | | ✓ | | | ✓ | ✓ | | |
| 7 | 33015 | 8965253 | ✓ | | ✓ | ✓ | | | ✓ | ✓ | ✓ | |
| 8 | 33016 | 8961476 | ✓ | | ✓ | ✓ | | | ✓ | ✓ | ✓ | |

## SAAB 9-3 YS3D — 02/98 →09/02

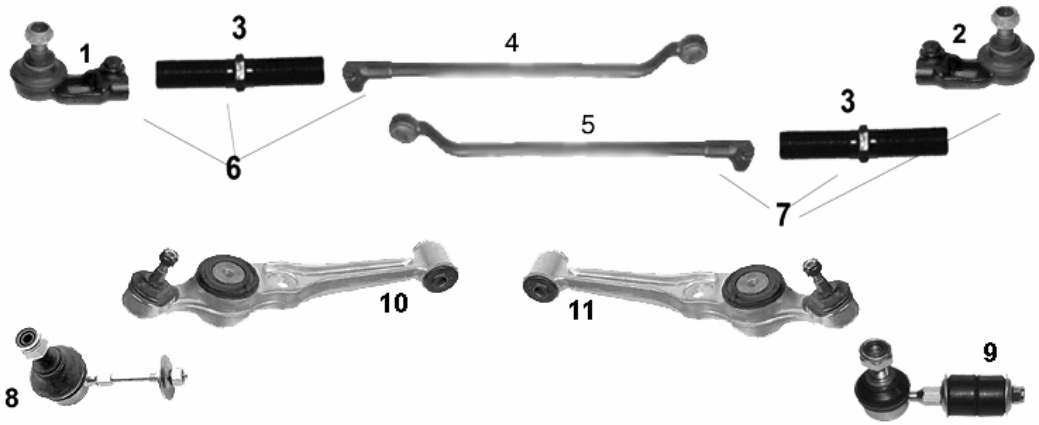


| NR | MAPCO | REF | | | ← | → | ↑ | ↓ | | | NEW | INFO |
|---|---|---|---|---|---|---|---|---|---|---|---|---|
| 1 | 19610 | 4242749 | ✓ | | ✓ | | | | ✓ | ✓ | | |
| 2 | 19611 | 4242756 | ✓ | | | ✓ | | | ✓ | ✓ | | |
| 3 | 49604 | 4242731 | ✓ | | ✓ | ✓ | | | ✓ | ✓ | | |
| 4 | 49752 | 4242673 | ✓ | | ✓ | | | | ✓ | ✓ | | |
| 5 | 49753 | 4242681 | ✓ | | | ✓ | | | ✓ | ✓ | | |
| 6 | 49750 | 4242681S1 | ✓ | | ✓ | | | | ✓ | ✓ | | |
| 7 | 49751 | 4242673S1 | ✓ | | | ✓ | | | ✓ | ✓ | | |
| 8 | 19607 | 350263 | ✓ | | ✓ | ✓ | | | ✓ | ✓ | | |
| 9 | 19607/8HPS | 350263S1 | ✓ | | ✓ | ✓ | | | ✓ | ✓ | | |
| 10 | 19984 | 454 3450 | ✓ | | ✓ | | | ✓ | ✓ | ✓ | | |
| 11 | 19985 | 454 3468 | ✓ | | | ✓ | | ✓ | ✓ | ✓ | | |

## SAAB 9-3 YS3F 09/02 →

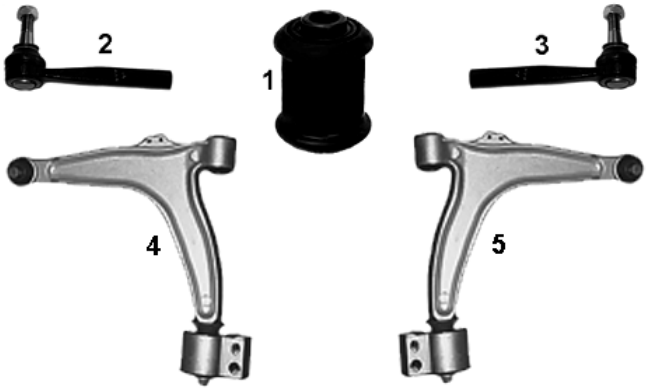


| NR | MAPCO | REF | | | ← | → | ↑ | ↓ | | | NEW | INFO |
|---|---|---|---|---|---|---|---|---|---|---|---|---|
| 1 | 33788 | 4566899 | ✓ | | ✓ | ✓ | | | ✓ | ✓ | | |
| 2 | 49620 | 5239314 | ✓ | | ✓ | | | | ✓ | ✓ | ✓ | M14x1,5 |
| 3 | 49621 | 5239322 | ✓ | | | ✓ | | | ✓ | ✓ | ✓ | M14x1,5 |
| 4 | 49623 | 352051 | ✓ | | ✓ | | | | ✓ | ✓ | ✓ | |
| 5 | 49624 | 352052 | ✓ | | | ✓ | | | ✓ | ✓ | ✓ | |

## SAAB 9-5 YS3E 09/97 →

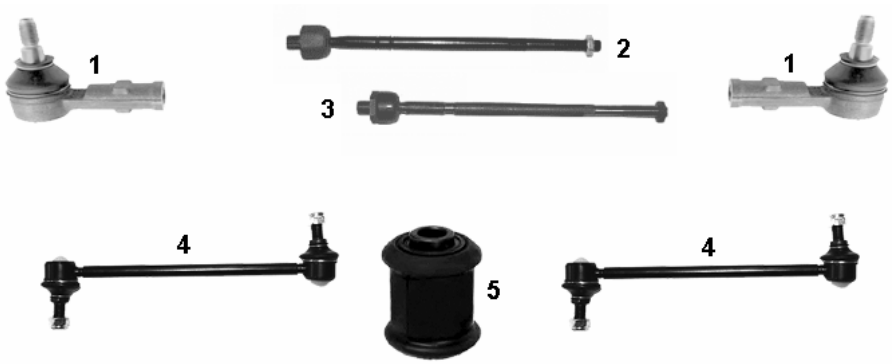


| NR | MAPCO | REF | | | ← | → | ↑ | ↓ | | | NEW | INFO |
|---|---|---|---|---|---|---|---|---|---|---|---|---|
| 1 | 19626 | 4836540 | ✓ | | ✓ | ✓ | | | ✓ | ✓ | | →10/01 M14x1,50 RHT |
| 2 | 19627 | 4836557 | ✓ | | ✓ | ✓ | | | ✓ | ✓ | | →10/01 M14x1,50 RHT |
| 3 | 19628 | 4836557 | ✓ | | ✓ | ✓ | | | ✓ | ✓ | | ZF |
| 4 | 19600HPS | 4686606 | ✓ | | ✓ | ✓ | | | ✓ | ✓ | | |
| 5 | 33788 | 4566899 | ✓ | | ✓ | ✓ | | | ✓ | ✓ | | |
| 6 | 49620 | 5239314 | ✓ | | ✓ | | | | ✓ | ✓ | ✓ | 10/01 → M14x1,5 |
| 7 | 49621 | 5239322 | ✓ | | | ✓ | | | ✓ | ✓ | ✓ | 10/01 → M14x1,5 |

# SEAT

## SEAT ALHAMBRA 04/96→

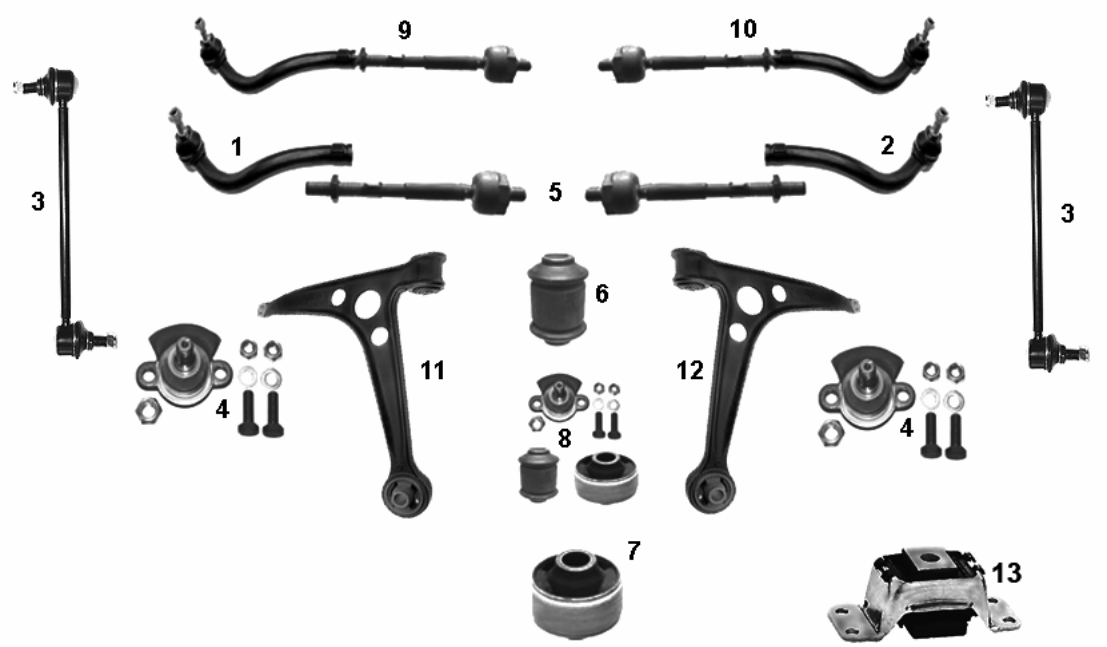


| NR | MAPCO | REF | | | ← | → | ↑ | ↓ | | | NEW | INFO |
|---|---|---|---|---|---|---|---|---|---|---|---|---|
| 1 | 49857 | 7M0422817 | ✓ | | ✓ | | | | ✓ | ✓ | | M14x1,50 RHT |
| 2 | 49858 | 7M0422818 | ✓ | | | ✓ | | | ✓ | ✓ | | M14x1,50 RHT |
| 3 | 49856HPS | 7M0411317 | ✓ | | ✓ | ✓ | | | ✓ | ✓ | | |
| 4 | 49861 | 7M0407365A | ✓ | | ✓ | ✓ | | | ✓ | ✓ | | |
| 5 | 49866 | 7M0422803G | ✓ | | ✓ | ✓ | | | ✓ | ✓ | | |
| 6 | 33908 | 7M0501541 | ✓ | | ✓ | ✓ | | | ✓ | ✓ | | |
| 7 | 33928 | 7M0407181A | ✓ | | ✓ | ✓ | | | ✓ | ✓ | | |
| 8 | 19266 | | ✓ | | ✓ | ✓ | | | ✓ | ✓ | | Kit |
| 9 | 49866/1 | 7M0422803G | ✓ | | ✓ | | | | ✓ | ✓ | | |
| 10 | 49866/2 | 7M0422804G | ✓ | | | ✓ | | | ✓ | ✓ | | |
| 11 | 49876 | 7M0407151B | ✓ | | ✓ | | | | ✓ | ✓ | | |
| 12 | 49877 | 7M0407152B | ✓ | | | ✓ | | | ✓ | ✓ | | |
| 13 | 33864 | 7M0505221C | | ✓ | ✓ | ✓ | | | ✓ | ✓ | | 2.8 |
| | | | | | | | | | | | | |
| | | | | | | | | | | | | |

## SEAT ALTEA (5P1) 03/04→

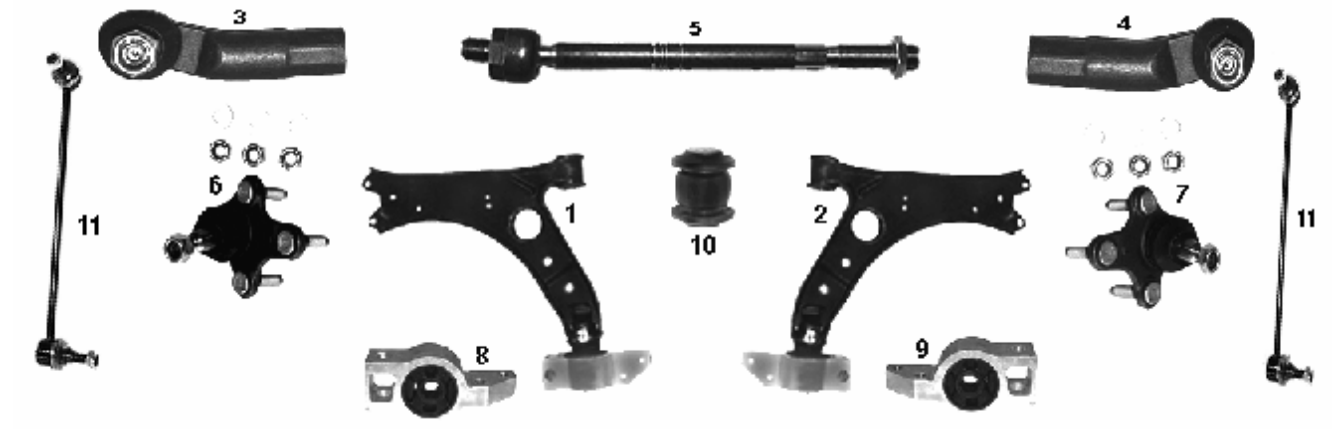


| NR | MAPCO | REF | | | ← | → | ↑ | ↓ | | | NEW | INFO |
|---|---|---|---|---|---|---|---|---|---|---|---|---|
| 1 | 51715 | 1K0 407 151P | ✓ | | ✓ | | | ✓ | ✓ | ✓ | | |
| 2 | 51716 | 1K0 407 152P | ✓ | | | ✓ | | ✓ | ✓ | ✓ | | |
| 3 | 51826 | 1K0 423 811A | ✓ | | ✓ | | | | ✓ | ✓ | | |
| 4 | 51827 | 1K0 423 812A | ✓ | | | ✓ | | | ✓ | ✓ | | |
| 5 | 51723 | 1K0 423 810A | ✓ | | ✓ | ✓ | | | ✓ | ✓ | | M16x1,5RHT L=310 mm |
| 6 | 51724 | 1K0 407 365E | ✓ | | ✓ | | | ✓ | ✓ | ✓ | | Konus 16,00 mm |
| 7 | 51725 | 1K0 407 366E | ✓ | | | ✓ | | ✓ | ✓ | ✓ | | Konus 16,00 mm |
| 8 | 36948 | 1K0 199 231G | ✓ | | ✓ | | | ✓ | ✓ | ✓ | ✓ | |
| 9 | 36949 | 1K0 199 232G | ✓ | | | ✓ | | ✓ | ✓ | ✓ | ✓ | |
| 10 | 36950 | 1K0 407 182 | ✓ | | ✓ | ✓ | | ✓ | ✓ | ✓ | ✓ | |
| 11 | 51825HPS | 1K0 411 315D | ✓ | | ✓ | ✓ | | ✓ | ✓ | ✓ | ✓ | |

## SEAT AROSA 1997→

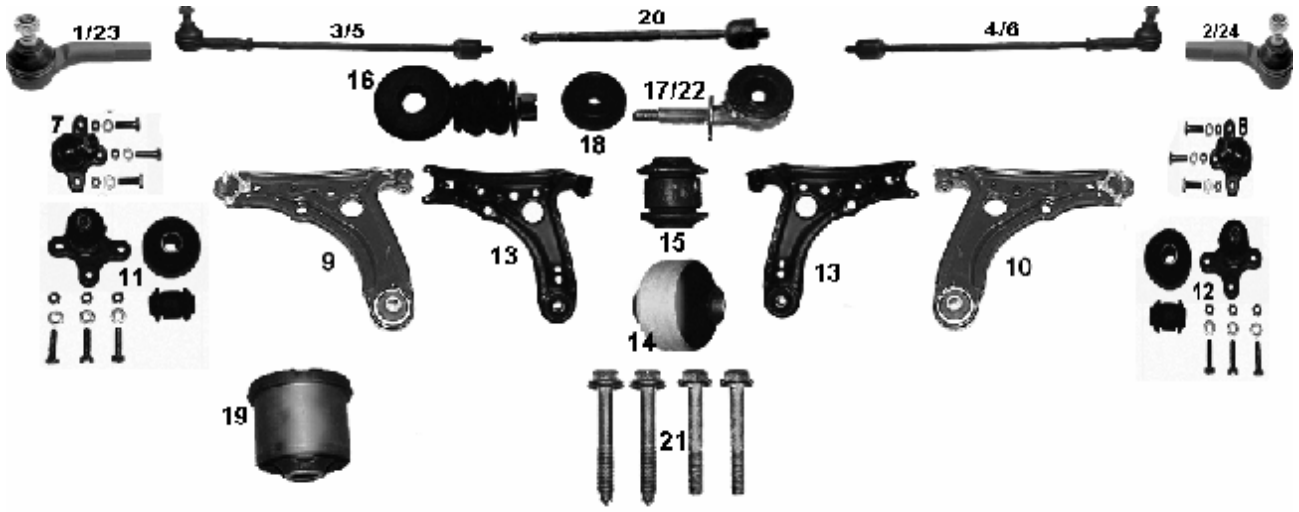


| NR | MAPCO | REF | | | ← | → | ↑ | ↓ | | | NEW | INFO |
|---|---|---|---|---|---|---|---|---|---|---|---|---|
| 1 | **19885** | 6N0419811 | ✓ | | ✓ | | | | | ✓ | | M14x1,50 RHT |
| 2 | **19886** | 6N0419812 | ✓ | | | ✓ | | | | ✓ | | M14x1,50 RHT |
| 3 | **19688** | 6N0419803 | ✓ | | ✓ | | | | | ✓ | | |
| 4 | **19689** | 6N0419804 | ✓ | | | ✓ | | | | ✓ | | |
| 5 | **19696** | 6N0422803A | ✓ | | ✓ | | | | ✓ | | | |
| 6 | **19697** | 6N0422804A | ✓ | | | ✓ | | | ✓ | | | |
| 7 | **19895** | 6N0407365 | ✓ | | ✓ | | | | ✓ | ✓ | | |
| 8 | **19896** | 6N0407365A | ✓ | | | ✓ | | | ✓ | ✓ | | |
| 9 | **51819** | 6X0407151A | ✓ | | ✓ | | | | ✓ | ✓ | | **7 + 13** |
| 10 | **51820** | 6X0407151A | ✓ | | | ✓ | | | ✓ | ✓ | | **8 + 13** |
| 11 | **19295** | | ✓ | | ✓ | | | | ✓ | ✓ | | Kit |
| 12 | **19296** | | ✓ | | | ✓ | | | ✓ | ✓ | | Kit |
| 13 | **51819/1** | 6X0407151A | ✓ | | ✓ | ✓ | | | ✓ | ✓ | | |
| 14 | **33835** | 6N0407181 | ✓ | | ✓ | ✓ | | | ✓ | ✓ | | Ø 17 mm |
| 15 | **33834** | 6N0407182 | ✓ | | ✓ | ✓ | | | ✓ | ✓ | | Ø 10 mm |
| 16 | **49862/1** | 6N0411315 | ✓ | | ✓ | ✓ | | | ✓ | ✓ | | **17 + 18** STOP 1.4 16V 01/00-> |
| 17 | **49862** | 6N0411315 | ✓ | | ✓ | ✓ | | | ✓ | ✓ | | STOP 1.4 16V 01/00-> |
| 18 | **49862/9** | 191411329 | ✓ | | ✓ | ✓ | | | ✓ | ✓ | | |
| 19 | **33937** | 6N0501541D | | ✓ | ✓ | ✓ | | | ✓ | ✓ | | |
| 20 | **19696/1** | **6N0422821A** | ✓ | | ✓ | ✓ | | | ✓ | | | M14x1,5 |
| 21 | **95686** | | ✓ | | ✓ | ✓ | | | ✓ | ✓ | | MS |
| 22 | **51821** | 6N041315A | ✓ | | ✓ | ✓ | | | ✓ | ✓ | | ✓ 1.4 16V 01/00-> D Innen/ inner 20,0mm |
| 23 | **51822** | 6X0422811 | ✓ | | ✓ | | | | ✓ | | ✓ | M14x1,5 RHT |
| 24 | **51823** | 6X0422812 | ✓ | | | ✓ | | | ✓ | | ✓ | M14x1,5 RHT |
| | | | | | | | | | | | | |
| | | | | | | | | | | | | |

## SEAT CORDOBA (6K2) 11/93→10/02

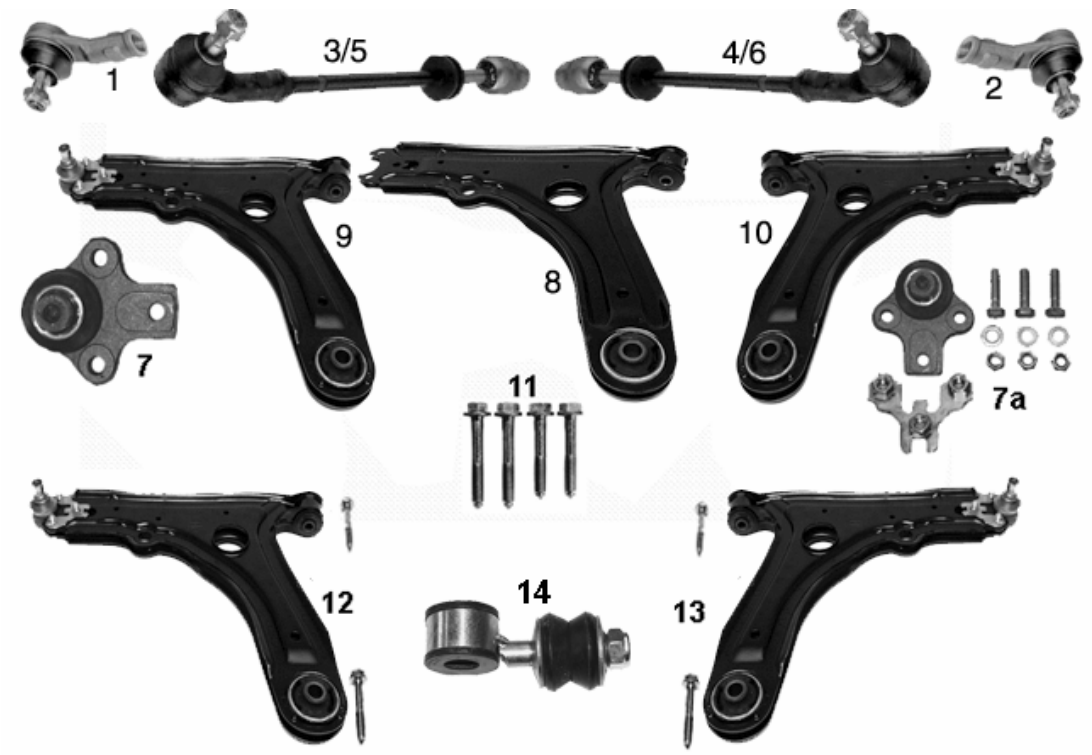


| NR | MAPCO | REF | | | ← | → | ↑ | ↓ | | | NEW | INFO |
|---|---|---|---|---|---|---|---|---|---|---|---|---|
| 1 | **19877** | 191419811 | ✓ | | ✓ | | | | ✓ | ✓ | | M14x1,50 RHT |
| 2 | **19878** | 191419812 | ✓ | | | ✓ | | | ✓ | ✓ | | M14x1,50 RHT |
| 3 | **19892** | 191419803A | ✓ | | ✓ | | | | | ✓ | | **(+1)** |
| 4 | **19888** | 191419804A | ✓ | | | ✓ | | | | ✓ | | **(+2)** |
| 5 | **19860** | 191422803A | ✓ | | ✓ | | | | ✓ | | | **(+1)** |
| 6 | **19861** | 191422804A | ✓ | | | ✓ | | | ✓ | | | **(+2)** |
| 7 | **19889** | 357407365A | ✓ | | ✓ | ✓ | | | ✓ | ✓ | | **Ø 19 mm** |
| 7a | **19889/1** | 357407365A | ✓ | | ✓ | ✓ | | | ✓ | ✓ | | **Ø 19 mm** |
| 8 | **19858** | 191407153B | ✓ | | ✓ | ✓ | | | ✓ | ✓ | | |
| 9 | **19858/1** | | ✓ | | ✓ | | | | ✓ | ✓ | | **7 + 8** |
| 10 | **19858/2** | | ✓ | | | ✓ | | | ✓ | ✓ | | **7 + 8** |
| 11 | **95858** | | ✓ | | ✓ | ✓ | | | ✓ | ✓ | | MS |
| 12 | **19858/7** | | ✓ | | ✓ | | | | ✓ | ✓ | | **+ 7 + 8** |
| 13 | **19858/8** | | ✓ | | | ✓ | | | ✓ | ✓ | | **+ 7 + 8** |
| 14 | **51862** | 191411315A | ✓ | | ✓ | ✓ | | | ✓ | ✓ | ✓ | Ø 18 mm -> 03/97 |

## SEAT CORDOBA (6L2) 10/02→

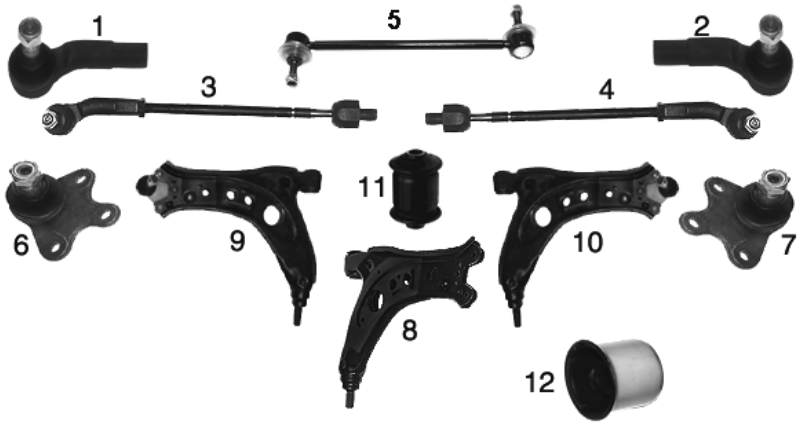


| NR | MAPCO | REF | | | ← | → | ↑ | ↓ | | | NEW | INFO |
|---|---|---|---|---|---|---|---|---|---|---|---|---|
| 1 | 59806 | 6Q0423811 | ✓ | | ✓ | | | | ✓ | ✓ | | |
| 2 | 59807 | 6Q0423812 | ✓ | | | ✓ | | | ✓ | ✓ | | |
| 3 | 59808 | 6Q0423803B | ✓ | | ✓ | | | | ✓ | ✓ | | |
| 4 | 59809 | 6Q0423804B | ✓ | | | ✓ | | | ✓ | ✓ | | |
| 5 | 59812HPS | 6Q0411315C | ✓ | | ✓ | ✓ | | | ✓ | ✓ | | |
| 6 | 59810 | 6Q0407365A | ✓ | | ✓ | | | | ✓ | ✓ | | |
| 7 | 59811 | 6Q0407366A | ✓ | | | ✓ | | | ✓ | ✓ | | |
| 8 | 59813 | 6Q0407151D | ✓ | | ✓ | ✓ | | | ✓ | ✓ | | |
| 9 | 59813/1 | | ✓ | | | ✓ | | | ✓ | ✓ | | 6 + 8 |
| 10 | 59813/2 | | ✓ | | | ✓ | | | ✓ | ✓ | | 7 + 8 |
| 11 | 36938 | 6Q0407182A | ✓ | | ✓ | ✓ | | | ✓ | ✓ | ✓ | |
| 12 | 36939 | 6Q0407183 | ✓ | | ✓ | ✓ | | | ✓ | ✓ | ✓ | |

## SEAT IBIZA - MALAGA 06/84→ 06/86
## SEAT RONDA 06/78→11/88

| NR | MAPCO | REF | | | ← | → | ↑ | ↓ | | | NEW | INFO |
|---|---|---|---|---|---|---|---|---|---|---|---|---|
| 1 | 19042 | SE022162406A | ✓ | | ✓ | ✓ | | | | ✓ | | M12x1,5RHT 06/84→ |
| 2 | 19043 | SE022162449A | ✓ | | ✓ | ✓ | | | | ✓ | | |

## SEAT IBIZA I 07/86→ 12/93

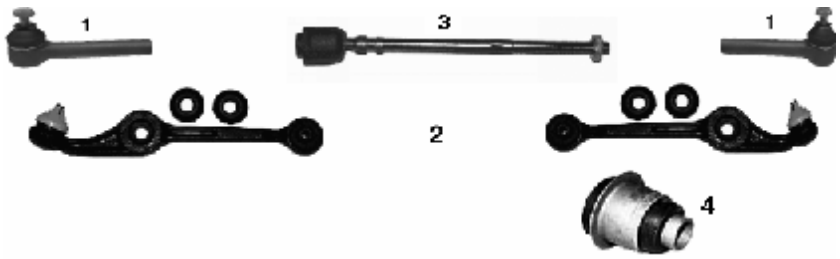


| NR | MAPCO | REF | | | ← | → | ↑ | ↓ | | | NEW | INFO |
|---|---|---|---|---|---|---|---|---|---|---|---|---|
| 1 | 19042 | SE022162406A | ✓ | | ✓ | ✓ | | | | ✓ | | M12x1,5RHT |
| 2 | 19064 | SE021156110B | ✓ | | ✓ | ✓ | | | | ✓ | | 01/90→ 08/93 Ø 17 mm |
| 3 | 19043 | SE022162449A | ✓ | | ✓ | ✓ | | | | ✓ | | |
| 4 | 33004 | 138156532A | | ✓ | ✓ | ✓ | | | | ✓ | | |

## SEAT IBIZA II + III

03/93→02/02

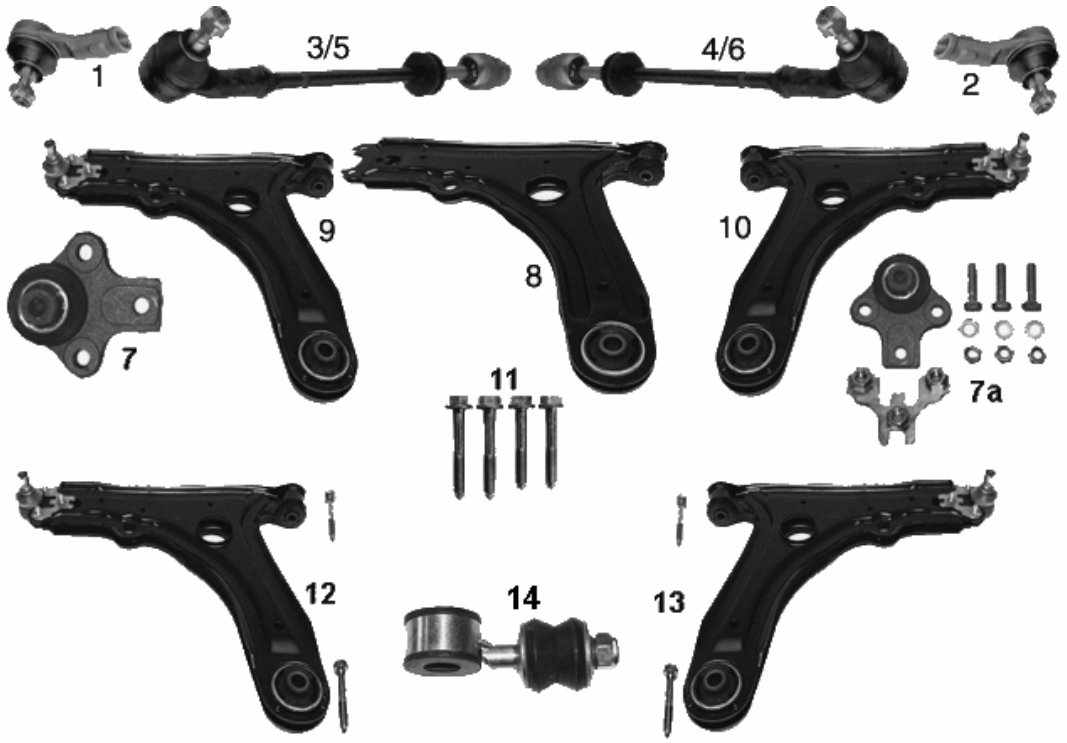


| NR | MAPCO | REF | | | ← | → | ↑ | ↓ | | | NEW | INFO |
|---|---|---|---|---|---|---|---|---|---|---|---|---|
| 1 | 19877 | 191419811 | ✓ | | ✓ | | | | ✓ | ✓ | | M14x1,50 RHT |
| 2 | 19878 | 191419812 | ✓ | | | ✓ | | | ✓ | ✓ | | M14x1,50 RHT |
| 3 | 19892 | 191419803A | ✓ | | ✓ | | | | | ✓ | | (+1) |
| 4 | 19888 | 191419804A | ✓ | | | ✓ | | | | ✓ | | (+2) |
| 5 | 19860 | 191422803A | ✓ | | ✓ | | | | ✓ | | | (+1) |
| 6 | 19861 | 191422804A | ✓ | | | ✓ | | | ✓ | | | (+2) |
| 7 | 19889 | 357407365A | ✓ | | ✓ | ✓ | | | ✓ | ✓ | | Ø 19 mm |
| 7a | 19889/1 | 357407365A | ✓ | | ✓ | ✓ | | | ✓ | ✓ | | Ø 19 mm |
| 8 | 19858 | 191407153B | ✓ | | ✓ | ✓ | | | ✓ | ✓ | | |
| 9 | 19858/1 | | ✓ | | ✓ | | | | ✓ | ✓ | | 7 + 8 |
| 10 | 19858/2 | | ✓ | | | ✓ | | | ✓ | ✓ | | 7 + 8 |
| 11 | 95858 | | ✓ | | ✓ | ✓ | | | ✓ | ✓ | | MS |
| 12 | 19858/7 | | ✓ | | ✓ | | | | ✓ | ✓ | | + 7 + 8 |
| 13 | 19858/8 | | ✓ | | | ✓ | | | ✓ | ✓ | | + 7 + 8 |
| 14 | 51862 | 191411315A | ✓ | | ✓ | ✓ | | | ✓ | ✓ | ✓ | Ø 18 mm -> 03/97 |

## SEAT IBIZA IV (6L1) 02/02→

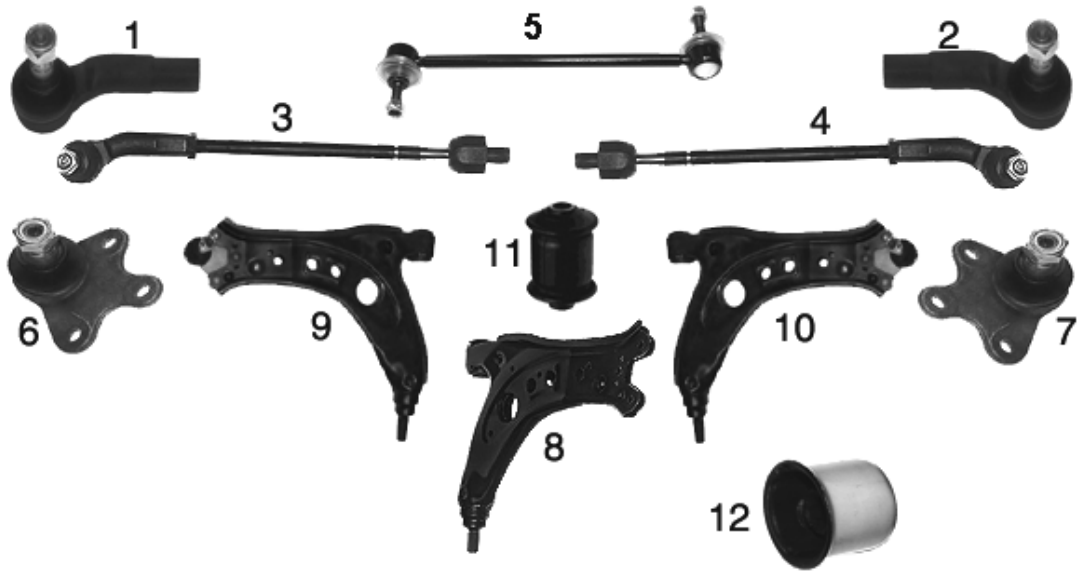


| NR | MAPCO | REF | | | ← | → | ↑ | ↓ | | | NEW | INFO |
|---|---|---|---|---|---|---|---|---|---|---|---|---|
| 1 | 59806 | 6Q0423811 | ✓ | | ✓ | | | | ✓ | ✓ | | |
| 2 | 59807 | 6Q0423812 | ✓ | | | ✓ | | | ✓ | ✓ | | |
| 3 | 59808 | 6Q0423803B | ✓ | | ✓ | | | | ✓ | ✓ | | |
| 4 | 59809 | 6Q0423804B | ✓ | | | ✓ | | | ✓ | ✓ | | |
| 5 | 59812HPS | 6Q0411315C | ✓ | | ✓ | ✓ | | | ✓ | ✓ | | |
| 6 | 59810 | 6Q0407365A | ✓ | | ✓ | | | | ✓ | ✓ | | |
| 7 | 59811 | 6Q0407366A | ✓ | | | ✓ | | | ✓ | ✓ | | |
| 8 | 59813 | 6Q0407151D | ✓ | | ✓ | ✓ | | | ✓ | ✓ | | |
| 9 | 59813/1 | | ✓ | | | ✓ | | | ✓ | ✓ | | 6 + 8 |
| 10 | 59813/2 | | ✓ | | | ✓ | | | ✓ | ✓ | | 7 + 8 |
| 11 | 36938 | 6Q0407182A | ✓ | | ✓ | ✓ | | | ✓ | ✓ | ✓ | |
| 12 | 36939 | 6Q0407183 | ✓ | | ✓ | ✓ | | | ✓ | ✓ | ✓ | |

## SEAT LEON (1M1) 11/99→

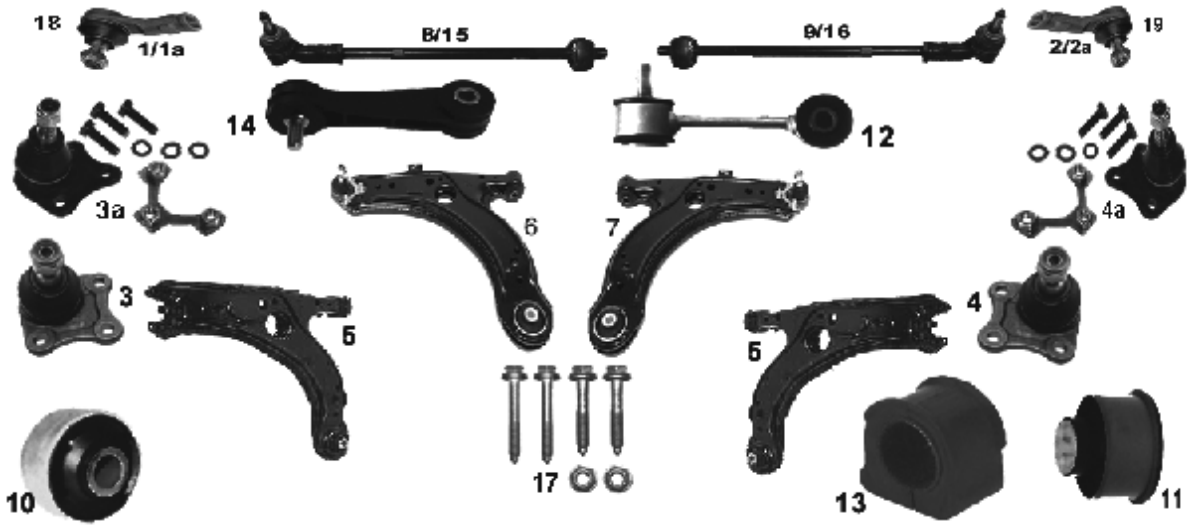


| NR | MAPCO | REF | | | ← | → | ↑ | ↓ | | | NEW | INFO |
|---|---|---|---|---|---|---|---|---|---|---|---|---|
| 1 | 49700 | 1J0 422 811B | ✓ | | ✓ | | | | ✓ | ✓ | | L=94mm M14x1,5RHT, Chassis 8L-W-050422 → |
| 1a | 59895 | 1J0 422 811A | ✓ | | ✓ | | | | ✓ | ✓ | | L= 75mm M14x1,5RHT, Chassis → 8L-W-050421 |
| 2 | 49701 | 1J0 422 812B | ✓ | | | ✓ | | | ✓ | ✓ | | L=94mm M14x1,5RHT, Chassis 8L-W-050422 → |
| 2a | 59896 | 1J0 422 812A | ✓ | | | ✓ | | | ✓ | ✓ | | L= 75mm M14x1,5RHT, Chassis → 8L-W-050421 |
| 3 | 49702 | 1J0 407 365C | ✓ | | ✓ | | | | ✓ | ✓ | | |
| 3a | 49702/1 | 1J0 407 365A | ✓ | | ✓ | | | | ✓ | ✓ | | |
| 4 | 49703 | 1J0 407 366C | ✓ | | | ✓ | | | ✓ | ✓ | | |
| 4a | 49703/1 | 1J0 407 366A | ✓ | | | ✓ | | | ✓ | ✓ | | |
| 5 | 49704 | 1J0 407 151B | ✓ | | ✓ | ✓ | | | ✓ | ✓ | | |
| 6 | 49704/1 | | ✓ | | ✓ | | | | ✓ | ✓ | | **5+3a** Chassis 8L-W-050422→ |
| 7 | 49704/2 | | ✓ | | | ✓ | | | ✓ | ✓ | | **5+4a** Chassis 8L-W-050422→ |
| 8 | 49690 | 1J0 422 803B | ✓ | | ✓ | | | | ✓ | ✓ | | Chassis 8L-W-050422→ |
| 9 | 49691 | 1J0 422 804B | ✓ | | | ✓ | | | ✓ | ✓ | | Chassis 8L-W-050422→ |
| 10 | 33903 | 1J0 407 181 | ✓ | | ✓ | ✓ | | | ✓ | ✓ | | |
| 11 | 33912 | 1J0 501 541C | | ✓ | ✓ | ✓ | | | ✓ | ✓ | | |
| 12 | 49867 | 1J0 411 315C | ✓ | | ✓ | ✓ | | | ✓ | ✓ | | Stahl/steel L=105mm, Ø 23mm |
| 13 | 33927 | 1J0 411 314B | ✓ | | ✓ | ✓ | | | ✓ | ✓ | | Innen Ø 19mm |
| 14 | 49868 | 1J0 411 315C | ✓ | | ✓ | ✓ | | | ✓ | ✓ | | Plastik L= 105mm Ø 21mm |
| 15 | 49869 | 1J0 422 803A | ✓ | | ✓ | | | | ✓ | ✓ | | Chassis → 8L-W-050421 |
| 16 | 49870 | 1J0 422 804A | ✓ | | | ✓ | | | ✓ | ✓ | | Chassis → 8L-W-050421 |
| 17 | 95704 | | ✓ | | ✓ | ✓ | | | ✓ | ✓ | | MS |
| 18 | 51711 | 8N0 422 811A | ✓ | | ✓ | | | | ✓ | | ✓ | 16x1,5RHT ✓ 1.8T |
| 19 | 51712 | 8N0 422 812A | ✓ | | | ✓ | | | ✓ | | ✓ | 16x1,5RHT ✓ 1.8T |

## SEAT MALAGA 07/86→12/93

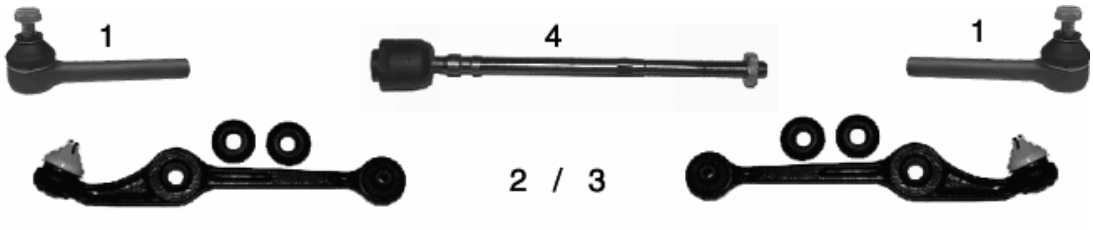


| NR | MAPCO | REF | | | ← | → | ↑ | ↓ | | | NEW | INFO |
|---|---|---|---|---|---|---|---|---|---|---|---|---|
| 1 | 19042 | SE022162406A | ✓ | | ✓ | ✓ | | | | ✓ | | M12x1,5RHT |
| 2 | 19063 | SE021156110A | ✓ | | ✓ | ✓ | | | | ✓ | | 10/86→ 12/89 Ø 15 mm |
| 3 | 19064 | SE021156110B | ✓ | | ✓ | ✓ | | | | ✓ | | 01/90→ 8/93 Ø 17 mm |
| 4 | 19043 | SE022162449B | ✓ | | ✓ | ✓ | | | | ✓ | | |
| | | | | | | | | | | | | |

## SEAT MARBELLA 1980→10/98

| NR | MAPCO | REF | | | ← | → | ↑ | ↓ | | | NEW | INFO |
|---|---|---|---|---|---|---|---|---|---|---|---|---|
| 1 | 19046 | SE141162410A | ✓ | | ✓ | ✓ | | | | ✓ | | 10/82→ M12x1,5RHT |
| 2 | 19044 | SE141140104A | ✓ | | ✓ | ✓ | | | | ✓ | | |
| 3 | 19048 | SE141140104A | ✓ | | ✓ | ✓ | | | | ✓ | | |
| 4 | 19045 | SE141156110A | ✓ | | ✓ | ✓ | | | | ✓ | | |
| 5 | 19452 | SE141162449 | ✓ | | ✓ | ✓ | | | | ✓ | ✓ | M12x1,5RH |
| | | | | | | | | | | | | |

## SEAT TOLEDO I

03/91→ 03/99

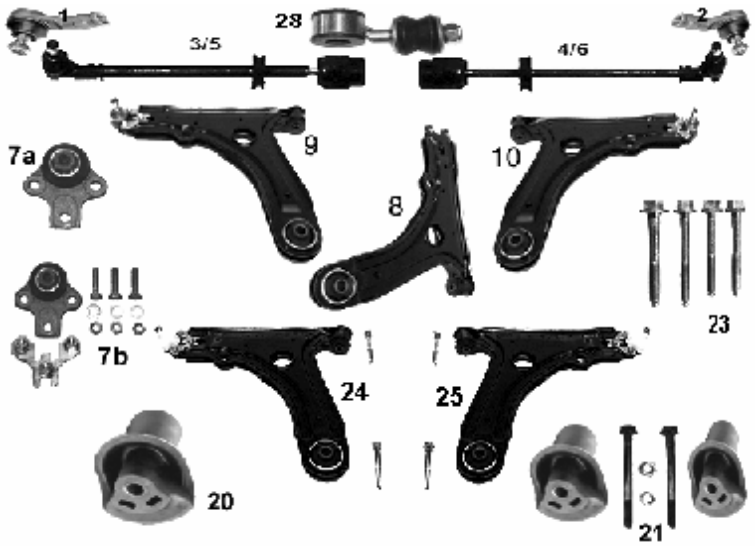


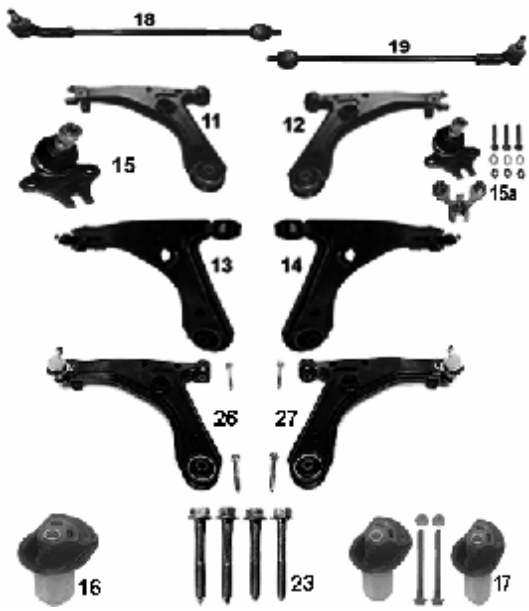


| NR | MAPCO | REF | | | ← | → | ↑ | ↓ | | | NEW | INFO |
|---|---|---|---|---|---|---|---|---|---|---|---|---|
| 1 | 19877 | 191419811 | ✓ | | ✓ | | | | ✓ | ✓ | | M14x1,5RHT |
| 2 | 19878 | 191419812 | ✓ | | | ✓ | | | ✓ | ✓ | | M14x1,5RHT |
| 3 | 19892 | 191419803A | ✓ | | ✓ | | | | | ✓ | | (+1) |
| 4 | 19888 | 191419804A | ✓ | | | ✓ | | | | ✓ | | (+2) |
| 5 | 19860 | 191422803A | ✓ | | ✓ | | | | ✓ | | | (+1) |
| 6 | 19861 | 191422804A | ✓ | | | ✓ | | | ✓ | | | (+2) |
| 7a | 19889 | 357407365A | ✓ | | ✓ | ✓ | | | ✓ | ✓ | | Ø 19 mm |
| 7b | 19889/1 | 357407365A | ✓ | | ✓ | ✓ | | | ✓ | ✓ | | Ø 19 mm |
| 8 | 19858 | 191407153B | ✓ | | ✓ | ✓ | | | ✓ | ✓ | | |
| 9 | 19858/1 | | ✓ | | ✓ | | | | ✓ | ✓ | | 7b+8 |
| 10 | 19858/2 | | ✓ | | | ✓ | | | ✓ | ✓ | | 7b+8 |
| 20 | 33833 | 191501541 | | ✓ | ✓ | ✓ | | | ✓ | ✓ | | |
| 21 | 33833/2 | 191501541S | | ✓ | ✓ | ✓ | | | ✓ | ✓ | | |
| 22 | 95858 | | ✓ | | ✓ | ✓ | | | ✓ | ✓ | ✓ | MS |
| 24 | 19858/7 | | ✓ | | ✓ | | | | ✓ | ✓ | ✓ | + |
| 25 | 19858/8 | | ✓ | | | ✓ | | | ✓ | ✓ | ✓ | + |
| 28 | 51862 | 191411315A | ✓ | | ✓ | ✓ | | | ✓ | ✓ | ✓ | Ø 18 mm -> 03/97 |
| 11 | 49664 | 1H0407151A | ✓ | | ✓ | | | | ✓ | ✓ | | ✓2.0i 16V |
| 12 | 49665 | 1H0407152 | ✓ | | | ✓ | | | ✓ | ✓ | | ✓2.0i 16V |
| 13 | 49666 | | ✓ | | ✓ | | | | ✓ | ✓ | | 11 + 15a✓2.0i 16V |
| 14 | 49667 | | ✓ | | | ✓ | | | ✓ | ✓ | | 12 + 15a✓2.0i 16V |
| 15 | 19679 | 1H0407365 | ✓ | | ✓ | ✓ | | | ✓ | ✓ | | Ø 16,5 mm ✓2.0i 16V |
| 15a | 19679/1 | 1H0407365S | ✓ | | ✓ | ✓ | | | ✓ | ✓ | | Ø 16,5 mm ✓2.0i 16V |
| 16 | 33858 | 1H10501541A | | ✓ | ✓ | ✓ | | | ✓ | ✓ | | ✓2.0i 16V |
| 17 | 33858/2 | 1H0501541S | | ✓ | ✓ | ✓ | | | ✓ | ✓ | | ✓2.0i 16V |
| 18 | 49873 | 1H0422803A | ✓ | | ✓ | | | | ✓ | ✓ | | ✓2.0i 16V |
| 19 | 49874 | 1H0422804A | ✓ | | | ✓ | | | ✓ | ✓ | | ✓2.0i 16V |
| 23 | 95870 | | ✓ | | ✓ | ✓ | | | ✓ | ✓ | ✓ | MS ✓2.0i 16V |
| 26 | 49666/7 | | ✓ | | ✓ | | | | ✓ | ✓ | ✓ | + 11 + 15a✓2.0i 16V |
| 27 | 49667/7 | | ✓ | | | ✓ | | | ✓ | ✓ | ✓ | + 12 + 15a✓2.0i 16V |

## SEAT TOLEDO II

04/99→

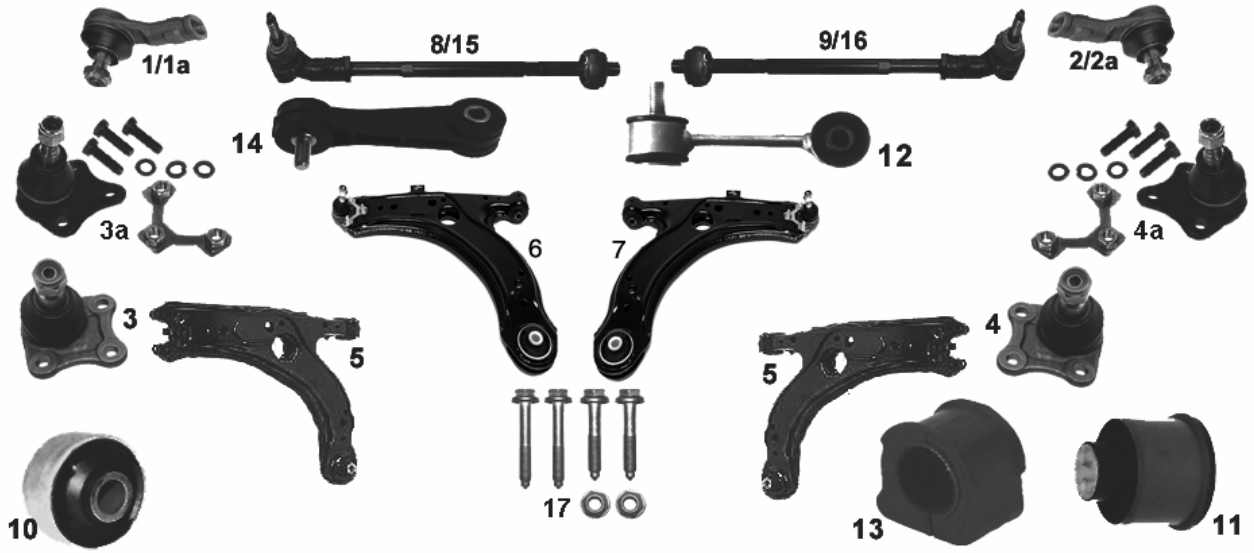


| NR | MAPCO | REF | | | ← | → | ↑ | ↓ | | | NEW | INFO |
|---|---|---|---|---|---|---|---|---|---|---|---|---|
| 1 | 49700 | 1J0 422 811B | ✓ | | ✓ | | | | ✓ | ✓ | | L=94mm M14x1,5RHT, Chassis 8L-W-050422 → |
| 1a | 59895 | 1J0 422 811A | ✓ | | ✓ | | | | ✓ | ✓ | | L=75mm M14x1,5RHT, Chassis → 8L-W-050421 |
| 2 | 49701 | 1J0 422 812B | ✓ | | | ✓ | | | ✓ | ✓ | | L=94mm M14x1,5RHT, Chassis 8L-W-050422 → |
| 2a | 59896 | 1J0 422 812A | ✓ | | | ✓ | | | ✓ | ✓ | | L=94mm M14x1,5RHT, Chassis → 8L-W-050421 |
| 3 | 49702 | 1J0 407 365C | ✓ | | ✓ | | | | ✓ | ✓ | | |
| 3a | 49702/1 | 1J0 407 365A | ✓ | | ✓ | | | | ✓ | ✓ | | |
| 4 | 49703 | 1J0 407 366C | ✓ | | | ✓ | | | ✓ | ✓ | | |
| 4a | 49703/1 | 1J0 407 366A | ✓ | | | ✓ | | | ✓ | ✓ | | |
| 5 | 49704 | 1J0 407 151B | ✓ | | ✓ | ✓ | | | ✓ | ✓ | | |
| 6 | 49704/1 | | ✓ | | ✓ | | | | ✓ | ✓ | | **5+3a** Chassis 8L-W-050422→ |
| 7 | 49704/2 | | ✓ | | | ✓ | | | ✓ | ✓ | | **5+4a** Chassis 8L-W-050422→ |
| 8 | 49690 | 1J0 422 803B | ✓ | | ✓ | | | | ✓ | ✓ | | Chassis 8L-W-050422→ |
| 9 | 49691 | 1J0 422 804B | ✓ | | | ✓ | | | ✓ | ✓ | | Chassis 8L-W-050422→ |
| 10 | 33903 | 1J0 407 181 | ✓ | | ✓ | ✓ | | | ✓ | ✓ | | |
| 11 | 33912 | 1J0 501 541C | | ✓ | ✓ | ✓ | | | ✓ | ✓ | | |
| 12 | 49867 | 1J0 411 315C | ✓ | | ✓ | ✓ | | | ✓ | ✓ | | Stahl/steel L=105mm, Ø 23mm |
| 13 | 33927 | 1J0 411 314B | ✓ | | ✓ | ✓ | | | ✓ | ✓ | | innen/inner Ø 19mm |
| 13a | 33824 | 1J0 411 314G | ✓ | | ✓ | ✓ | | | ✓ | ✓ | | innen/inner Ø 23mm |
| 14 | 49868 | 1J0 411 315C | ✓ | | ✓ | ✓ | | | ✓ | ✓ | | Plastik L= 105mm Ø 21mm |
| 15 | 49869 | 1J0 422 803A | ✓ | | ✓ | | | | ✓ | ✓ | | Chassis → 8L-W-050421 |
| 16 | 49870 | 1J0 422 804A | ✓ | | | ✓ | | | ✓ | ✓ | | Chassis → 8L-W-050421 |
| 17 | 95704 | | ✓ | | ✓ | ✓ | | | ✓ | ✓ | | MS |

# SKODA

## SKODA FABIA 08/99→

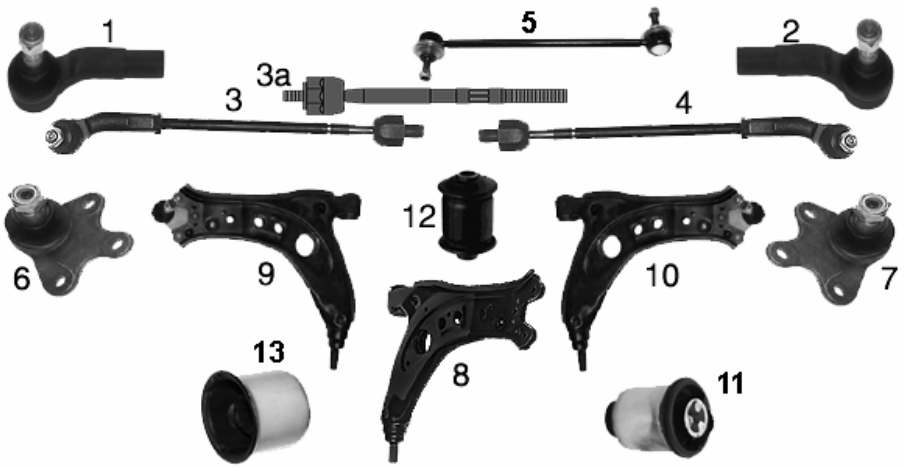


| NR | MAPCO | REF | | | ← | → | ↑ | ↓ | | | NEW | INFO |
|---|---|---|---|---|---|---|---|---|---|---|---|---|
| 1 | 59806 | 6Q0423811 | ✓ | | ✓ | | | | ✓ | ✓ | | |
| 2 | 59807 | 6Q0423812 | ✓ | | | ✓ | | | ✓ | ✓ | | |
| 3 | 59808 | 6Q0423803B | ✓ | | ✓ | | | | ✓ | ✓ | | |
| 3a | 59808/1 | 6Q0423803B part | ✓ | | ✓ | ✓ | | | ✓ | ✓ | | |
| 4 | 59809 | 6Q0423804B | ✓ | | | ✓ | | | ✓ | ✓ | | |
| 5 | 59812HPS | 6Q0411315C | ✓ | | ✓ | ✓ | | | ✓ | ✓ | | |
| 6 | 59810 | 6Q0407365A | ✓ | | ✓ | | | | ✓ | ✓ | | |
| 7 | 59811 | 6Q0407366A | ✓ | | | ✓ | | | ✓ | ✓ | | |
| 8 | 59813 | 6Q0407151D | ✓ | | ✓ | ✓ | | | ✓ | ✓ | | |
| 9 | 59813/1 | | ✓ | | | ✓ | | | ✓ | ✓ | | 6 + 8 |
| 10 | 59813/2 | | ✓ | | | ✓ | | | ✓ | ✓ | | 7 + 8 |
| 11 | 33912 | 1J0501541C | | ✓ | ✓ | ✓ | | | ✓ | ✓ | | |
| 12 | 36938 | 6Q0407182A | ✓ | | ✓ | ✓ | | | ✓ | ✓ | ✓ | |
| 13 | 36939 | 6Q0407183 | ✓ | | ✓ | ✓ | | | ✓ | ✓ | ✓ | |

## SKODA FAVORIT 1984→09/94

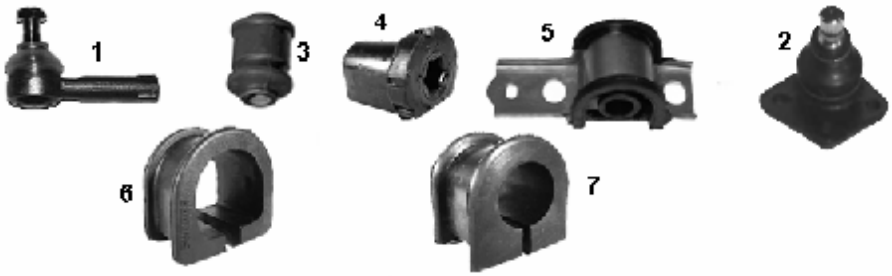


| NR | MAPCO | REF | | | ← | → | ↑ | ↓ | | | NEW | INFO |
|---|---|---|---|---|---|---|---|---|---|---|---|---|
| 1 | 19961 | 115500440 | ✓ | | ✓ | ✓ | | | | ✓ | | M12 x 1,0 RHT |
| 2 | 19962 | 115420240 | ✓ | | ✓ | ✓ | | | | ✓ | | |
| 3 | 19993 | 6U0407182 | ✓ | | ✓ | ✓ | | | | ✓ | | |
| 4 | 19994 | 115422291 | ✓ | | ✓ | ✓ | | | | ✓ | | |
| 5 | 33950 | 115422292 | ✓ | | ✓ | ✓ | | | | ✓ | | Ø 26,0 mm |
| 6 | 33954 | 115590801 | ✓ | | ✓ | ✓ | | | | ✓ | | |
| 7 | 33955 | 115590802 | ✓ | | ✓ | ✓ | | | | ✓ | | |
| | | | | | | | | | | | | |

## SKODA FELICIA 1994→06/01

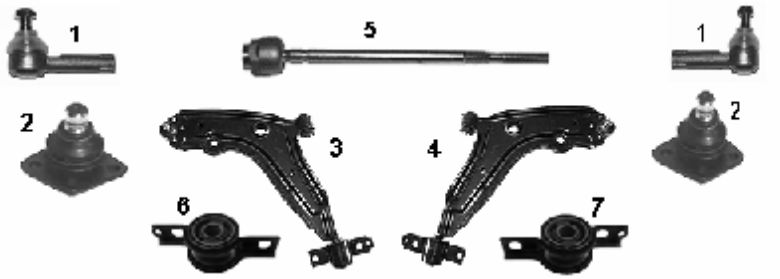


| NR | MAPCO | REF | | | ← | → | ↑ | ↓ | | | NEW | INFO |
|---|---|---|---|---|---|---|---|---|---|---|---|---|
| 1 | 19961 | 115 500 440 | ✓ | | ✓ | ✓ | | | ✓ | ✓ | | M12 x 1,0 RHT |
| 2 | 19962 | 115 420 240 | ✓ | | ✓ | ✓ | | | ✓ | ✓ | | |
| 3 | 19971 | 6U0 407 151 | ✓ | | ✓ | | | | ✓ | ✓ | | |
| 4 | 19972 | 6U0 407 152 | ✓ | | | ✓ | | | ✓ | ✓ | | |
| 5 | 19968 | 6U0 422 807 | ✓ | | ✓ | ✓ | | | ✓ | ✓ | | |
| 6 | 36780 | 6U6 407 359A | ✓ | | ✓ | | | | ✓ | ✓ | ✓ | |
| 7 | 36781 | 6U6 407 360A | ✓ | | | ✓ | | | ✓ | ✓ | ✓ | |

## SKODA OCTAVIA (1U_) 1997→

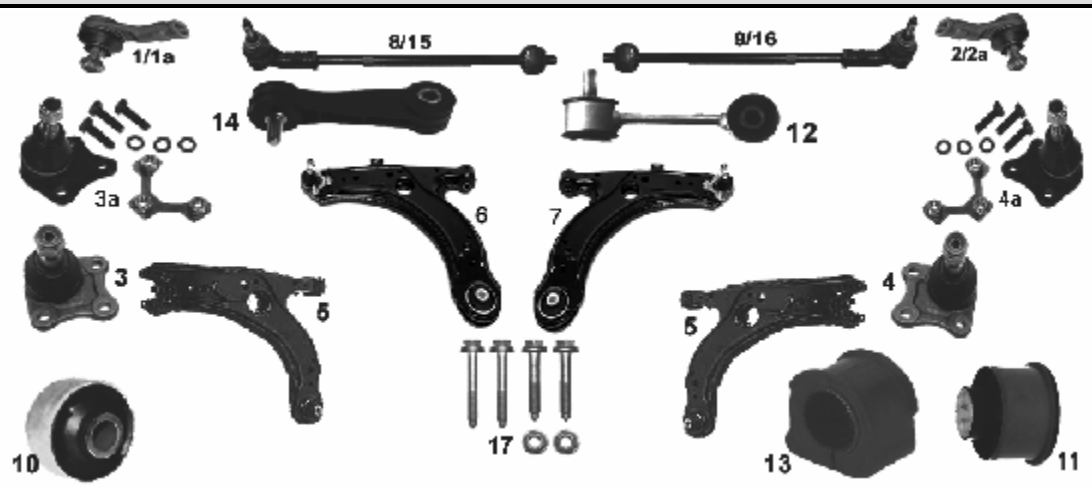


| NR | MAPCO | REF | | | ← | → | ↑ | ↓ | | | NEW | INFO |
|---|---|---|---|---|---|---|---|---|---|---|---|---|
| 1 | 49700 | 1J0 422 811B | ✓ | | ✓ | | | | ✓ | ✓ | | L=94mm M14x1,5RHT, Chassis 1U-W-061001→ |
| 1a | 59895 | 1J0 422 811A | ✓ | | ✓ | | | | ✓ | ✓ | | L=75mm M14x1,5RHT, Chassis → 1U-W-061000 |
| 2 | 49701 | 1J0 422 812B | ✓ | | | ✓ | | | ✓ | ✓ | | L=94mm M14x1,5RHT, Chassis 1U-W-061001→ |
| 2a | 59896 | 1J0 422 812A | ✓ | | | ✓ | | | ✓ | ✓ | | L=75mm M14x1,5RHT, Chassis → 1U-W-061000 |
| 3 | 49702 | 1J0 407 365C | ✓ | | ✓ | | | | ✓ | ✓ | | |
| 3a | 49702/1 | 1J0 407 365A | ✓ | | ✓ | | | | ✓ | ✓ | | |
| 4 | 49703 | 1J0 407 366C | ✓ | | | ✓ | | | ✓ | ✓ | | |
| 4a | 49703/1 | 1J0 407 366A | ✓ | | | ✓ | | | ✓ | ✓ | | |
| 5 | 49704 | 1J0 407 151B | ✓ | | ✓ | ✓ | | | ✓ | ✓ | | |
| 6 | 49704/1 | | ✓ | | ✓ | | | | ✓ | ✓ | | **5+3a** |
| 7 | 49704/2 | | ✓ | | | ✓ | | | ✓ | ✓ | | **5+4a** |
| 8 | 49690 | 1J0 422 803B | ✓ | | ✓ | | | | ✓ | ✓ | | Chassis 1U-W-061001→ |
| 9 | 49691 | 1J0 422 804B | ✓ | | | ✓ | | | ✓ | ✓ | | Chassis 1U-W-061001→ |
| 10 | 33903 | 1J0 407 181 | ✓ | | ✓ | ✓ | | | ✓ | ✓ | | |
| 11 | 33912 | 1J0 501 541C | | ✓ | ✓ | ✓ | | | ✓ | ✓ | | |
| 12 | 49867 | 1J0 411 315C | ✓ | | ✓ | ✓ | | | ✓ | ✓ | | Stahl/steel L=105mm, Ø 23mm |
| 13 | 33927 | 1J0 411 314B | ✓ | | ✓ | ✓ | | | ✓ | ✓ | | Innen Ø 19mm |
| 14 | 49868 | 1J0 411 315C | ✓ | | ✓ | ✓ | | | ✓ | ✓ | | Plastik L= 105mm Ø 21mm |
| 15 | 49869 | 1J0 422 803A | ✓ | | ✓ | | | | ✓ | ✓ | | Chassis →1U-W-061000 |
| 16 | 49870 | 1J0 422 804A | ✓ | | | ✓ | | | ✓ | ✓ | | Chassis →1U-W-061000 |
| 17 | 95704 | | ✓ | | ✓ | ✓ | | | ✓ | ✓ | | MS |

## SKODA OCTAVIA (1Z_) 06/04→

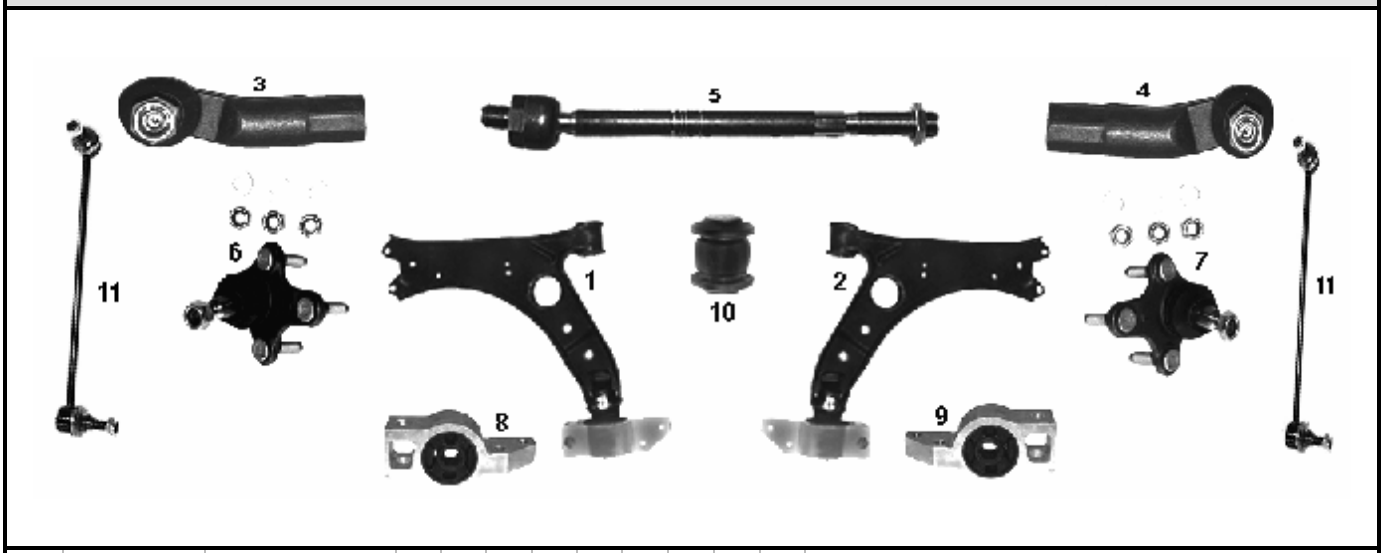


| NR | MAPCO | REF | | | ← | → | ↑ | ↓ | | | NEW | INFO |
|---|---|---|---|---|---|---|---|---|---|---|---|---|
| 1 | 51715 | 1K0 407 151P | ✓ | | ✓ | | | ✓ | ✓ | ✓ | | |
| 2 | 51716 | 1K0 407 152P | ✓ | | | ✓ | | ✓ | ✓ | ✓ | | |
| 3 | 51826 | 1K0 423 811A | ✓ | | ✓ | | | | ✓ | ✓ | | |
| 4 | 51827 | 1K0 423 812A | ✓ | | | ✓ | | | ✓ | ✓ | | |
| 5 | 51723 | 1K0 423 810A | ✓ | | ✓ | ✓ | | | ✓ | ✓ | | M16x1,5RHT L=310 mm |
| 6 | 51724 | 1K0 407 365E | ✓ | | ✓ | | | ✓ | ✓ | ✓ | | Konus 16,00 mm |
| 7 | 51725 | 1K0 407 366E | ✓ | | | ✓ | | ✓ | ✓ | ✓ | | Konus 16,00 mm |
| 8 | 36948 | 1K0 199 231G | ✓ | | ✓ | | | ✓ | ✓ | ✓ | ✓ | |
| 9 | 36949 | 1K0 199 232G | ✓ | | | ✓ | | ✓ | ✓ | ✓ | ✓ | |
| 10 | 36950 | 1K0 407 182 | ✓ | | ✓ | ✓ | | ✓ | ✓ | ✓ | ✓ | |
| 11 | 51825HPS | 1K0 411 315D | ✓ | | ✓ | ✓ | | ✓ | ✓ | ✓ | ✓ | |
| | | | | | | | | | | | | |
| | | | | | | | | | | | | |
| | | | | | | | | | | | | |

## SKODA SUPERB Chassis →3U-3-021 397 02/02→

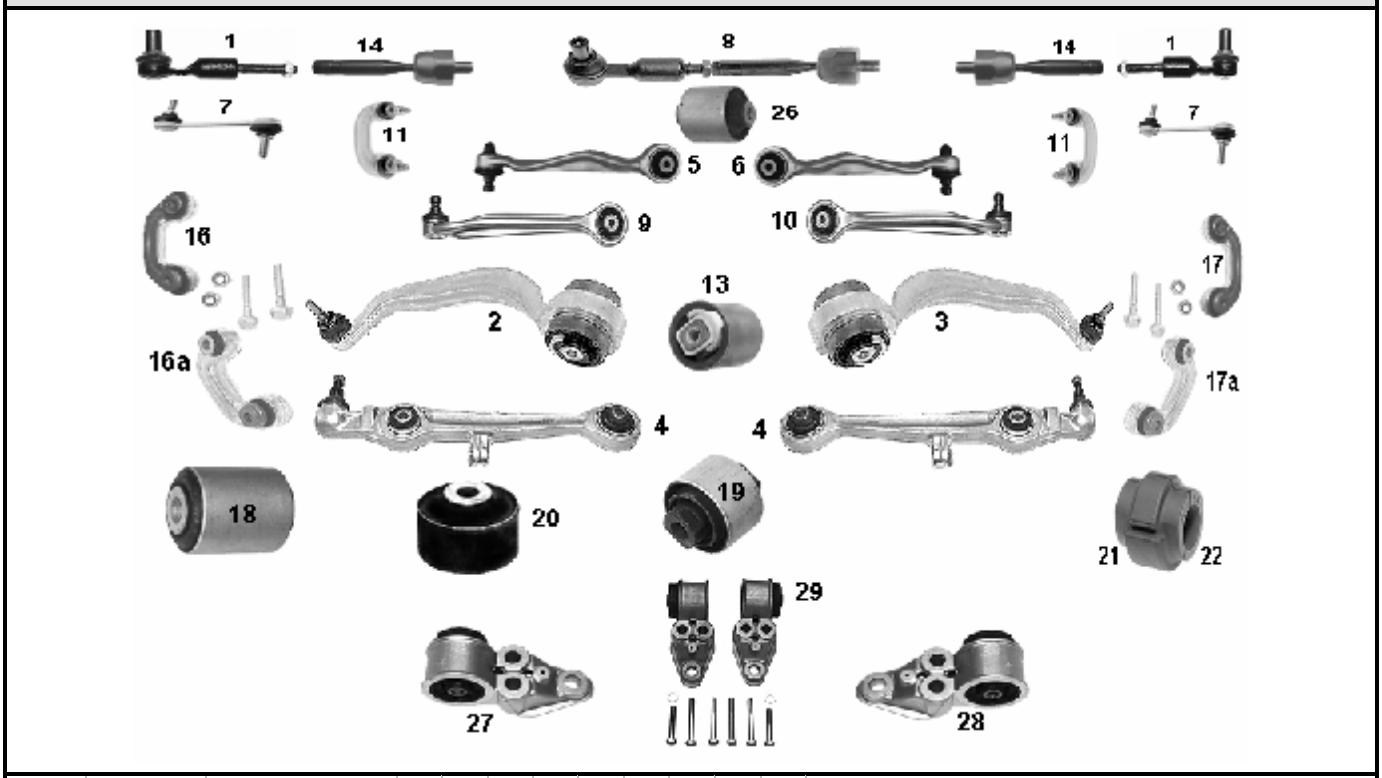


| NR | MAPCO | REF | | | ← | → | ↑ | ↓ | | | NEW | INFO |
|---|---|---|---|---|---|---|---|---|---|---|---|---|
| 1 | 49707 | 4D0419811B | ✓ | | ✓ | ✓ | | | ✓ | ✓ | | |
| 2 | 49708 | 4D0407693N | ✓ | | ✓ | | | ✓ | ✓ | ✓ | | hinten/ rear/ arrière |
| 3 | 49709 | 4D0407694N | ✓ | | | ✓ | | ✓ | ✓ | ✓ | | hinten/ rear/ arrière |
| 4 | 49710 | 4D0407151P | ✓ | | ✓ | ✓ | | | ✓ | ✓ | | |
| 5 | 49791 | 4D0407509D | ✓ | | ✓ | | ✓ | | ✓ | ✓ | | hinten/ rear/ arrière |
| 6 | 49792 | 4D0407510D | ✓ | | | ✓ | ✓ | | ✓ | ✓ | | hinten/ rear/ arrière |
| 7 | 49714 | 4D0505465D | ✓ | | ✓ | ✓ | | | ✓ | ✓ | | |
| 8 | 49732 | 4D0419801B | ✓ | | ✓ | ✓ | | | ✓ | ✓ | | |
| 9 | 49680 | 8D0407505F | ✓ | | ✓ | | ✓ | | ✓ | ✓ | | vorn/ front/ avant |
| 10 | 49681 | 8D0407506F | ✓ | | | ✓ | ✓ | | ✓ | ✓ | | vorn/ front/ avant |
| 11 | 49682 | 4D0411317J | ✓ | | ✓ | ✓ | | ✓ | ✓ | ✓ | | |
| 13 | 33932 | 4D0407183M | ✓ | | ✓ | ✓ | | ✓ | ✓ | ✓ | | |
| 14 | 49738 | 4D0422821A | ✓ | | ✓ | ✓ | | | ✓ | ✓ | | |
| 16 | 49683 | 8D0411317D | ✓ | | ✓ | | | ✓ | ✓ | ✓ | | |
| 16a | 49683/1 | 8D0411317D | ✓ | | ✓ | | | ✓ | ✓ | ✓ | | + |
| 17 | 49684 | 8D0411318D | ✓ | | | ✓ | | ✓ | ✓ | ✓ | | |
| 17a | 49684/1 | 8D0411318D | ✓ | | | ✓ | | ✓ | ✓ | ✓ | | + |
| 18 | 33839 | 4D0407181H | ✓ | | ✓ | ✓ | | | ✓ | ✓ | | |
| 19 | 33840 | 4D0407182E | ✓ | | ✓ | ✓ | | | ✓ | ✓ | | |
| 20 | 33876 | 4D0407515D | ✓ | | ✓ | ✓ | | | ✓ | ✓ | | |
| 21 | 33939 | 4D0411327E | ✓ | | ✓ | ✓ | | | ✓ | ✓ | | STOP |
| 22 | 33940 | 4D0411327F | ✓ | | ✓ | ✓ | | | ✓ | ✓ | | ✓ |
| 26 | 36915 | 4B0407515 | ✓ | | ✓ | ✓ | ✓ | | ✓ | ✓ | | vorn/ front/ avant |
| 27 | 36775 | 4B0501521D | | ✓ | ✓ | | | | ✓ | ✓ | ✓ | |
| 28 | 36776 | 4B0501522D | | ✓ | | ✓ | | | ✓ | ✓ | ✓ | |
| 29 | 36782 | | | | | | | | | | | |

## SKODA SUPERB Chassis →3U-3-021 397 Fortsetzung / continued 02/02→

23

23a

23b

24

25

24a

| NR | MAPCO | REF | | | ← | → | ↑ | ↓ | | | NEW | INFO |
|---|---|---|---|---|---|---|---|---|---|---|---|---|
| 23 | 59818 | 4D0498998C | ✓ | | ✓ | ✓ | | | ✓ | ✓ | | |
| 23a | 59818/1HPS | 4D0498998C | ✓ | | ✓ | ✓ | | | ✓ | ✓ | | + MS |
| 23b | 59818/2 | 4D0498998C | ✓ | | ✓ | ✓ | | | ✓ | ✓ | | + MS |
| 24 | 59819 | 8D0498998 | ✓ | | ✓ | ✓ | | | ✓ | ✓ | | |
| 24a | 59819/1 | 8D0498998 | ✓ | | ✓ | ✓ | | | ✓ | ✓ | | + MS |
| 25 | 95710 | | ✓ | | ✓ | ✓ | | | ✓ | ✓ | | MS |

# SMART

## SMART (MCC) CITY-COUPE 07/98→01/04
## CABRIO 03/00→01/04

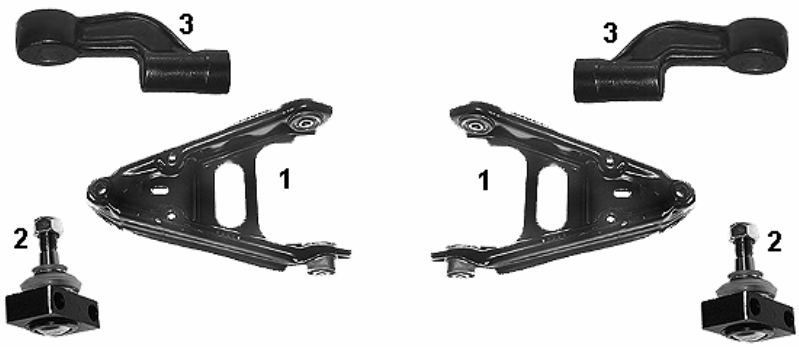


| NR | MAPCO | REF | | | ← | → | ↑ | ↓ | | | NEW | INFO |
|---|---|---|---|---|---|---|---|---|---|---|---|---|
| 1 | 59900 | 7001V006000000 | ✓ | | ✓ | ✓ | | | ✓ | ✓ | | |
| 2 | 59902 | 0015642V001 | ✓ | | ✓ | ✓ | | | ✓ | ✓ | ✓ | |
| 3 | 59903 | 4887V006000000 | ✓ | | ✓ | ✓ | | | ✓ | ✓ | ✓ | |
| | | | | | | | | | | | | |

## SMART (MCC) FORTWO CABRIO/ COUPE 01/04→

| NR | MAPCO | REF | | | ← | → | ↑ | ↓ | | | NEW | INFO |
|---|---|---|---|---|---|---|---|---|---|---|---|---|
| 1 | 59901 | 5102V005000000 | ✓ | | ✓ | ✓ | | | ✓ | ✓ | | ✓ 0,7 |
| 2 | 59902 | 0015642V001 | ✓ | | ✓ | ✓ | | | ✓ | ✓ | ✓ | |
| 3 | 59903 | 4887V006000000 | ✓ | | ✓ | ✓ | | | ✓ | ✓ | ✓ | |
| 4 | 59904 | 0001802V004 | | ✓ | ✓ | ✓ | | | ✓ | ✓ | ✓ | |

# SUBARU

## SUBARU IMPREZA 08/92 →

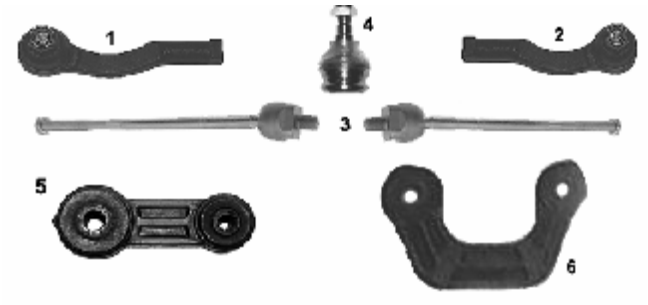


| NR | MAPCO | REF | | | ← | → | ↑ | ↓ | | | NEW | INFO |
|---|---|---|---|---|---|---|---|---|---|---|---|---|
| 1 | 49557 | 31320-GA200 | ✓ | | ✓ | ✓ | | | ✓ | ✓ | | M14 x 1,5 RHT |
| 2 | 49558 | 31320-GA190 | ✓ | | ✓ | | | | ✓ | ✓ | | M14 x 1,5 RHT |
| 3 | 59364 | 34140-AA 040 | ✓ | | | ✓ | | | ✓ | ✓ | | L= 290mm M14 x 1,5 RHT |
| 4 | 49560 | 21067-GA050 | ✓ | | ✓ | ✓ | | | ✓ | ✓ | | |
| 5 | 59597 | 20420-AA004 | ✓ | | ✓ | ✓ | | | ✓ | ✓ | | |
| 6 | 59596 | 20481-AA001 | | ✓ | ✓ | ✓ | | | ✓ | ✓ | | |

## SUBARU JUSTY 11/84→ 04/95

| NR | MAPCO | REF | | | ← | → | ↑ | ↓ | | | NEW | INFO |
|---|---|---|---|---|---|---|---|---|---|---|---|---|
| 1 | 49554 | 7313-20020 | ✓ | | ✓ | ✓ | | | ✓ | ✓ | | M12 x 1,25 RHT |
| 2 | 49555 | 7313-10140 | ✓ | | ✓ | ✓ | | | ✓ | ✓ | | M12 x 1,25 RHT |
| 3 | 49556 | 7210-67020 | ✓ | | ✓ | ✓ | | | ✓ | ✓ | | |

## SUBARU LEGACY I (BC) — 1989 → 07/94
## SUBARU LEGACY II (BD,BG) — 09/94→ 03/99

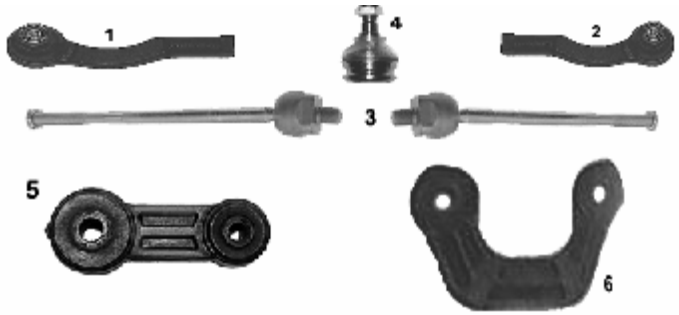


| NR | MAPCO | REF | | | ← | → | ↑ | ↓ | | | NEW | INFO |
|---|---|---|---|---|---|---|---|---|---|---|---|---|
| 1 | 49557 | 31320-GA200 | ✓ | | ✓ | ✓ | | | ✓ | ✓ | | M14 x 1,5 RHT |
| 2 | 49558 | 31320-GA190 | ✓ | | ✓ | | | | ✓ | ✓ | | M14 x 1,5 RHT |
| 3 | 59364 | 34140-AA 040 | ✓ | | | ✓ | | | ✓ | ✓ | | L= 290mm M14 x 1,5 RHT |
| 4 | 49560 | 21067-GA050 | ✓ | | ✓ | ✓ | | | ✓ | ✓ | | |
| 5 | 59595 | 20420-AA003 | ✓ | | ✓ | ✓ | | | ✓ | ✓ | | |
| 6 | 59596 | 20481-AA001 | | ✓ | ✓ | ✓ | | | ✓ | ✓ | | |

## SUBARU LEONE I + II — 03/79 → 07/91

| NR | MAPCO | REF | | | ← | → | ↑ | ↓ | | | NEW | INFO |
|---|---|---|---|---|---|---|---|---|---|---|---|---|
| 1 | 59297 | 7210-67000 | ✓ | | ✓ | ✓ | | | ✓ | ✓ | | |

## SUBARU 1800 XT COUPE — 11/84→12/90

| NR | MAPCO | REF | | | ← | → | ↑ | ↓ | | | NEW | INFO |
|---|---|---|---|---|---|---|---|---|---|---|---|---|
| 1 | 59297 | 7210-67000 | ✓ | | ✓ | ✓ | | | ✓ | ✓ | | |

# SUZUKI

## SUZUKI ALTO I — 06/82 → 12/85

| NR | MAPCO | REF | | | ← | → | ↑ | ↓ | | | NEW | INFO |
|---|---|---|---|---|---|---|---|---|---|---|---|---|

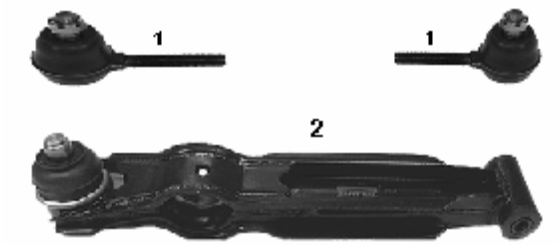


| | | | | | | | | | | | | |
|---|---|---|---|---|---|---|---|---|---|---|---|---|
| 1 | 59320 | 48810-84000 | ✓ | | ✓ | ✓ | | | ✓ | ✓ | | M12x1,25 RHT |
| 2 | 19518 | 45200-50E00 | ✓ | | ✓ | ✓ | | | ✓ | ✓ | | |

## SUZUKI ALTO II 01/86 → 11/93

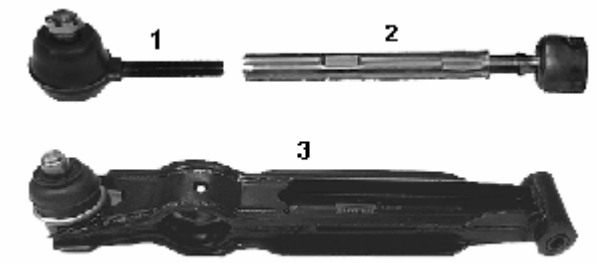


| NR | MAPCO | REF | | | ← | → | ↑ | ↓ | | | NEW | INFO |
|---|---|---|---|---|---|---|---|---|---|---|---|---|
| 1 | 59320 | 48810-84000 | ✓ | | ✓ | ✓ | | | ✓ | ✓ | | M12x1,25 RHT |
| 2 | 59317 | 48830-84000 | ✓ | | ✓ | ✓ | | | ✓ | ✓ | | M12x1,25 RHT |
| 3 | 19518 | 45200-50E00 | ✓ | | ✓ | ✓ | | | ✓ | ✓ | | |

## SUZUKI ALTO III 06/94 → 06/02

| NR | MAPCO | REF | | | ← | → | ↑ | ↓ | | | NEW | INFO |
|---|---|---|---|---|---|---|---|---|---|---|---|---|

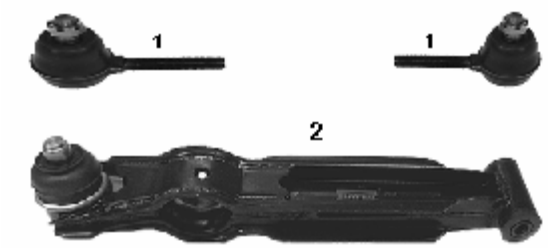


| | | | | | | | | | | | | |
|---|---|---|---|---|---|---|---|---|---|---|---|---|
| 1 | 59320 | 48810-84000 | ✓ | | ✓ | ✓ | | | ✓ | ✓ | | M12x1,25 RHT |
| 2 | 19518 | 45200-50E00 | ✓ | | ✓ | ✓ | | | ✓ | ✓ | | |
| | | | | | | | | | | | | |

## SUZUKI BALENO 01/86 → 07/93

| NR | MAPCO | REF | | | ← | → | ↑ | ↓ | | | NEW | INFO |
|---|---|---|---|---|---|---|---|---|---|---|---|---|
| 1 | 59201 | 48810-82000 | ✓ | | ✓ | ✓ | | | ✓ | ✓ | | |
| 2 | 59850 | 46630-60B01 | ✓ | | ✓ | ✓ | | | ✓ | ✓ | | Chassis ...103258 → |

## SUZUKI CARRY 01/86 → 07/93

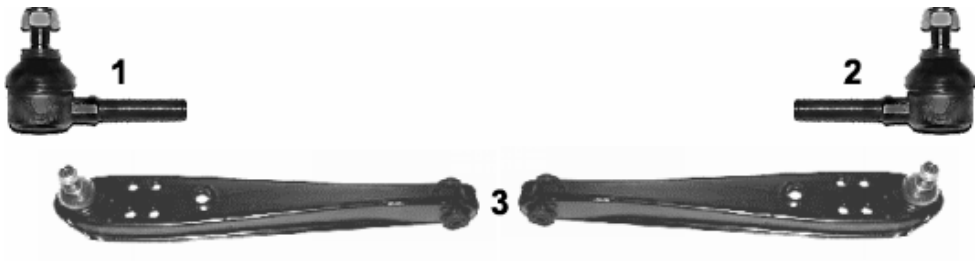


| NR | MAPCO | REF | | | ← | → | ↑ | ↓ | | | NEW | INFO |
|---|---|---|---|---|---|---|---|---|---|---|---|---|
| 1 | **49563** | 48820-79000 | ✓ | | ✓ | | | | ✓ | ✓ | | M14 x 1,5 LHT |
| 2 | **49564** | 48810-79000 | ✓ | | | ✓ | | | ✓ | ✓ | | M14 x 1,5 RHT |
| 3 | **49565** | 45200-85001 | ✓ | | ✓ | ✓ | | | ✓ | ✓ | | |

## SUZUKI GRAND VITARA 03/98 →

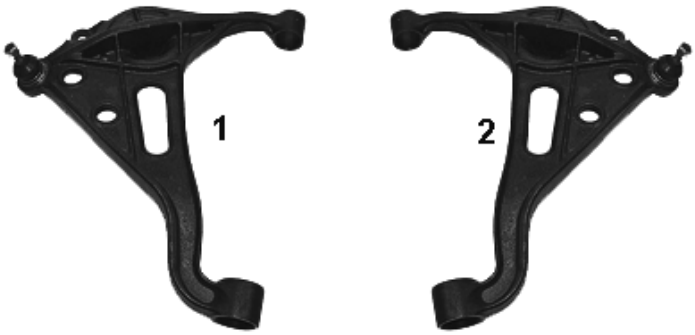


| NR | MAPCO | REF | | | ← | → | ↑ | ↓ | | | NEW | INFO |
|---|---|---|---|---|---|---|---|---|---|---|---|---|
| 1 | **51595** | 45202-67D01 | ✓ | | ✓ | | | ✓ | ✓ | ✓ | ✓ | |
| 2 | **51596** | 45201-67D01 | ✓ | | | ✓ | | ✓ | ✓ | ✓ | ✓ | |

## SUZUKI SUPER CARRY BUS 10/85 → 03/99

| NR | MAPCO | REF | | | ← | → | ↑ | ↓ | | | NEW | INFO |
|---|---|---|---|---|---|---|---|---|---|---|---|---|
| 1 | **59289** | 45200-77500 | ✓ | | ✓ | ✓ | | ✓ | ✓ | ✓ | | |

## SUZUKI SWIFT I

10/83→ 12/89

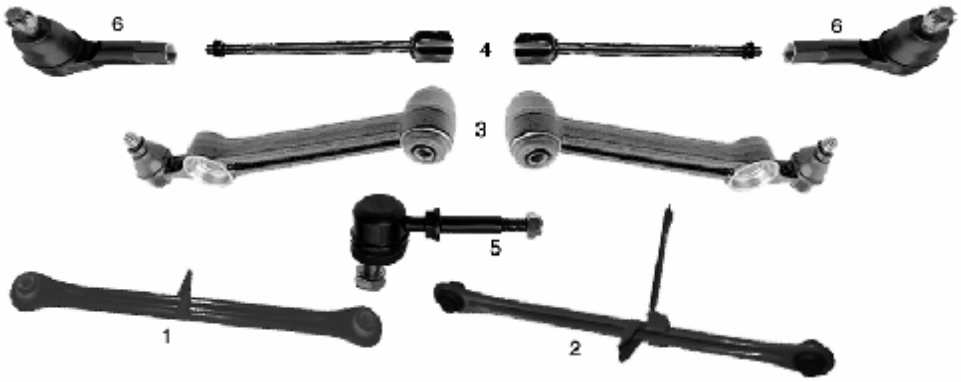


| NR | MAPCO | REF | | | ← | → | ↑ | ↓ | | | NEW | INFO |
|---|---|---|---|---|---|---|---|---|---|---|---|---|
| 1 | 49519 | 46300-60B00 | | ✓ | ✓ | ✓ | | | ✓ | ✓ | | |
| 2 | 49599 | 46300-70C02 | | ✓ | ✓ | ✓ | | | ✓ | ✓ | | |
| 3 | 49595 | 45200 – 82000 | ✓ | | ✓ | ✓ | | | ✓ | ✓ | | |
| 4 | 49596 | 48830-82000 | ✓ | | ✓ | ✓ | | | ✓ | ✓ | | M12X1,5RHT |
| 5 | 59299 | 46630-60B11 | ✓ | | ✓ | ✓ | | | ✓ | ✓ | | |
| 6 | 59201 | 48810-82000 | ✓ | | ✓ | ✓ | | | ✓ | ✓ | | |
| 7 | 19518 | 45200-50E00 | ✓ | | ✓ | ✓ | | | ✓ | ✓ | | |

## SUZUKI SWIFT II

03/89→ 05/01

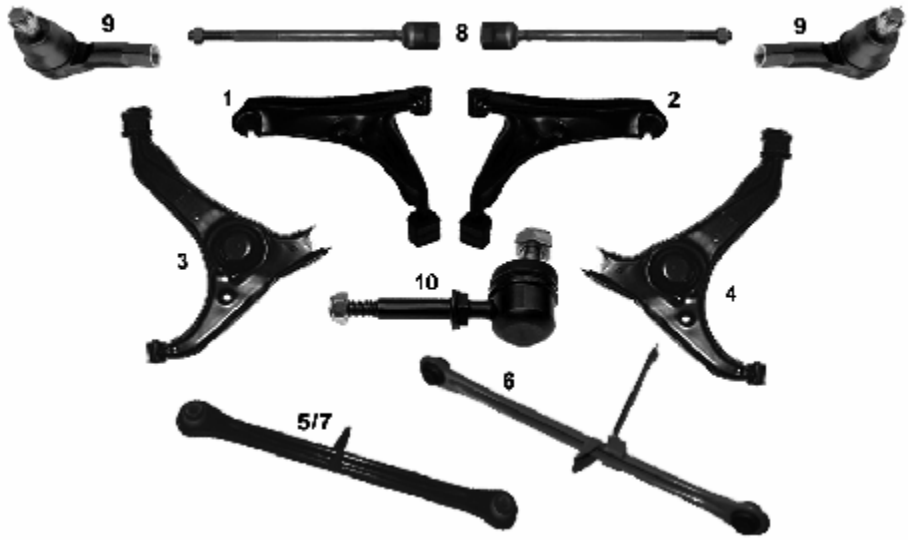


11/12

| NR | MAPCO | REF | | | ← | → | ↑ | ↓ | | | NEW | INFO |
|---|---|---|---|---|---|---|---|---|---|---|---|---|
| 1 | 49292 | 45202-60B01 | ✓ | | ✓ | | | ✓ | ✓ | ✓ | | |
| 2 | 49293 | 45201-60B01 | ✓ | | | ✓ | | ✓ | ✓ | ✓ | | |
| 3 | 49548 | 46201-60B00 | | ✓ | | ✓ | | ✓ | ✓ | ✓ | | |
| 4 | 49549 | 46202-60B00 | | ✓ | ✓ | | | ✓ | ✓ | ✓ | | |
| 5 | 49519 | 46300-60B00 | | ✓ | ✓ | ✓ | | | ✓ | ✓ | | → 1992 |
| 6 | 49599 | 46300-70C02 | | ✓ | ✓ | | | | ✓ | ✓ | | |
| 7 | 49594 | 46300-60B10 | | ✓ | ✓ | ✓ | | | ✓ | ✓ | | 1992→ |
| 8 | 59298 | 48830-60B00 | ✓ | | ✓ | ✓ | | | ✓ | ✓ | | |
| 9 | 59201 | 48810-82000 | ✓ | | ✓ | ✓ | | | ✓ | ✓ | | |
| 10 | 59299 | 46630-60B11 | ✓ | | ✓ | ✓ | | | ✓ | ✓ | | |
| 11 | 51592 | 46630-60B10 | | ✓ | ✓ | ✓ | | | ✓ | ✓ | ✓ | Stabilisatorstrebe; Rod strut, stabiliser |
| 12 | 51593 | 46630-60B00 | ✓ | | ✓ | ✓ | | | ✓ | ✓ | ✓ | Stabilisatorstrebe; Rod strut, stabiliser |

## SUZUKI VITARA 07/88 → 03/99

| NR | MAPCO | REF | | | ← | → | ↑ | ↓ | | | NEW | INFO |
|---|---|---|---|---|---|---|---|---|---|---|---|---|
| 1 | **49561** | 48820-60A00 | ✓ | | ✓ | ✓ | | ✓ | ✓ | ✓ | | M16 x 1,5 LHT |
| 2 | **49562** | 48810-60A00 | ✓ | | ✓ | ✓ | | ✓ | ✓ | ✓ | | M16 x 1,5 RHT |
| 3 | **59324** | 45700-60A00 | ✓ | | ✓ | ✓ | | | ✓ | ✓ | | |
| 4 | **59300** | 42311-60A00 | ✓ | | ✓ | ✓ | | ✓ | ✓ | ✓ | | |

## SUZUKI WAGON R+(EM) 02/98 → 05/00

| NR | MAPCO | REF | | | ← | → | ↑ | ↓ | | | NEW | INFO |
|---|---|---|---|---|---|---|---|---|---|---|---|---|
| 1 | **59320** | 48810-84000 | ✓ | | ✓ | ✓ | | | ✓ | ✓ | | M12x1,25 RHT |

# TOYOTA

## TOYOTA AVENSIS _T22_ 09/97 → 02/03

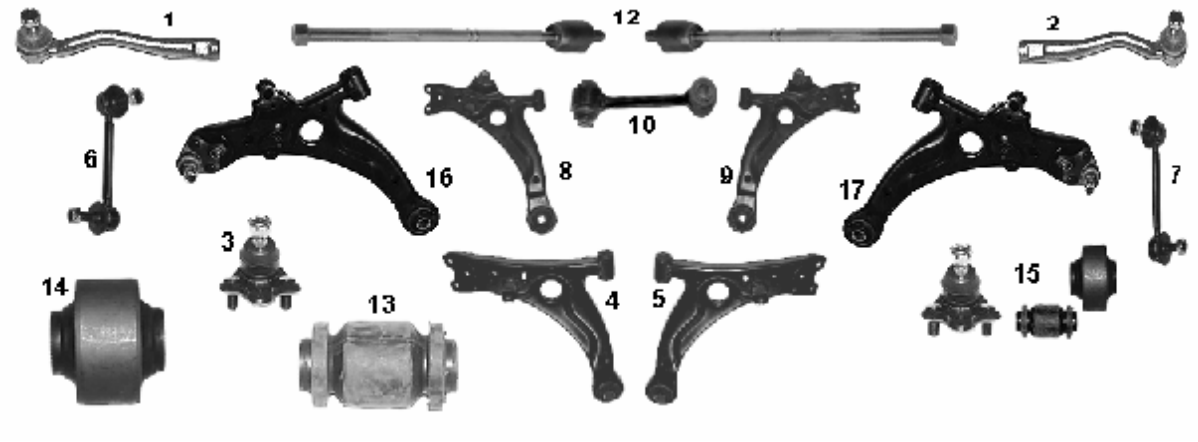


| NR | MAPCO | REF | | | ← | → | ↑ | ↓ | | | NEW | INFO |
|---|---|---|---|---|---|---|---|---|---|---|---|---|
| 1 | **49566** | 45047-29125 | ✓ | | ✓ | | | | ✓ | ✓ | | M14 x 1,5 RHT |
| 2 | **49567** | 45046-29365 | ✓ | | | ✓ | | | ✓ | ✓ | | M14 x 1,5 RHT |
| 3 | **19563** | 43330-19095 | ✓ | | ✓ | ✓ | | | ✓ | ✓ | | |
| 4 | **49576** | 48069-05040 | ✓ | | ✓ | | | ✓ | ✓ | ✓ | | 1.8 Automatik →06/2000 |
| 5 | **49577** | 48068-05040 | ✓ | | | ✓ | | ✓ | ✓ | ✓ | | 1.8 Automatik →06/2000 |
| 6 | **49270** | 48810-05012 | ✓ | | ✓ | | | ✓ | ✓ | ✓ | | |
| 7 | **49271** | 48820-05012 | ✓ | | | ✓ | | ✓ | ✓ | ✓ | | |
| 8 | **49257** | 48069-05050 | ✓ | | ✓ | | | ✓ | ✓ | ✓ | | Verso2.0 D4-D, 2.0VVT-i- 07/2000→ |
| 9 | **49258** | 48068-05050 | ✓ | | | ✓ | | ✓ | ✓ | ✓ | | Verso2.0 D4-D, 2.0VVT-i- 07/2000→ |
| 10 | **49259** | 48650-20021 | ✓ | | ✓ | ✓ | | | ✓ | ✓ | | Verso2.0 D4-D, 2.0VVT-i- 07/2000→ |
| 12 | **49287** | 45503-05020 | ✓ | | ✓ | ✓ | | | ✓ | ✓ | | |
| 13 | **33565** | 48654-05040 | ✓ | | ✓ | ✓ | | | ✓ | ✓ | | |
| 14 | **33566** | 48655-20140 | ✓ | | ✓ | ✓ | | | ✓ | ✓ | | |
| 15 | **19253** | | ✓ | | ✓ | ✓ | | | ✓ | ✓ | | **Kit** |
| 16 | **49257/1** | (48069-05050) | ✓ | | ✓ | | | ✓ | ✓ | ✓ | | **8+3** Verso2.0 D4-D, 2.0VVT-i- 07/2000→ |
| 17 | **49258/1** | (48068-05050) | ✓ | | | ✓ | | ✓ | ✓ | ✓ | | **9+3** Verso2.0 D4-D, 2.0VVT-i- 07/2000→ |

## TOYOTA AVENSIS _T25_ 04/03 →

| NR | MAPCO | REF | | | ← | → | ↑ | ↓ | | | NEW | INFO |
|---|---|---|---|---|---|---|---|---|---|---|---|---|
| 1 | **51577** | 48820-47010 | ✓ | | ✓ | ✓ | | | ✓ | ✓ | ✓ | L=285,0mm |

## TOYOTA AYGO 07/05→

| NR | MAPCO | REF | | | ← | → | ↑ | ↓ | | | NEW | INFO |
|---|---|---|---|---|---|---|---|---|---|---|---|---|
| 1 | 19348HPS | 5087.45 | ✓ | | ✓ | ✓ | | | ✓ | ✓ | | 335,0 mm |

## TOYOTA CAMRY (_V2_) 10/86→05/91

| NR | MAPCO | REF | | | ← | → | ↑ | ↓ | | | NEW | INFO |
|---|---|---|---|---|---|---|---|---|---|---|---|---|
| 1 | 59328 | 45503-29105 | ✓ | | ✓ | | | | ✓ | ✓ | | M14 x 1,5 RHT |

## TOYOTA CAMRY (_V1_) 06/91→ 06/97

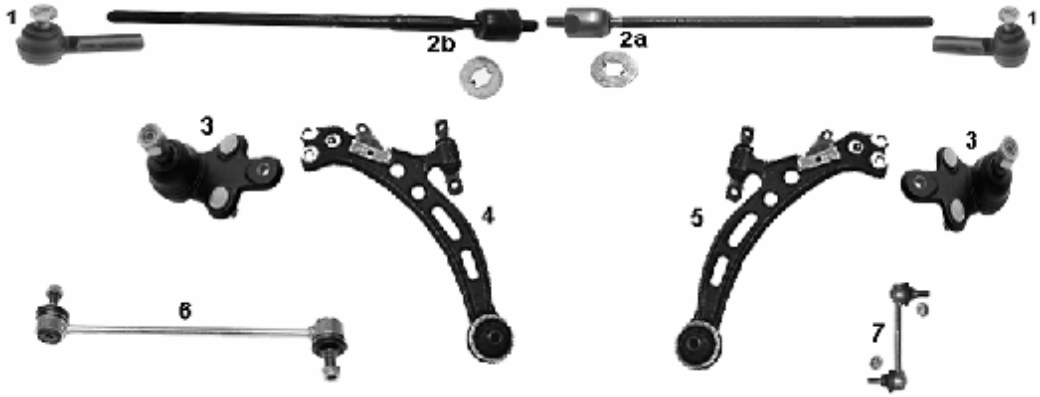


| NR | MAPCO | REF | | | ← | → | ↑ | ↓ | | | NEW | INFO |
|---|---|---|---|---|---|---|---|---|---|---|---|---|
| 1 | 59276 | 45046-29255 | ✓ | | ✓ | ✓ | | | ✓ | ✓ | | |
| 2a | 59268 | 45503-29355 | ✓ | | ✓ | ✓ | | | ✓ | ✓ | | 310,0 mm 06/91→ 07/91 |
| 2b | 59272 | 45503-39135 | ✓ | | ✓ | ✓ | | | ✓ | ✓ | | 350,0 mm 06/91→ 08/96 |
| 3 | 59567 | 43330-39285 | ✓ | | ✓ | ✓ | | | ✓ | ✓ | | |
| 4 | 59374 | 48069-33010 | ✓ | | ✓ | | | | ✓ | ✓ | | |
| 5 | 59375 | 48068-33010 | ✓ | | | ✓ | | | ✓ | ✓ | | |
| 6 | 49285 | 48830-33010 | | ✓ | ✓ | ✓ | | | ✓ | ✓ | | 4x2 |
| 7 | 49579 | 48830-32010 | | ✓ | ✓ | ✓ | | | ✓ | ✓ | | |

## TOYOTA CAMRY (_V20) 08/96→ 11/01

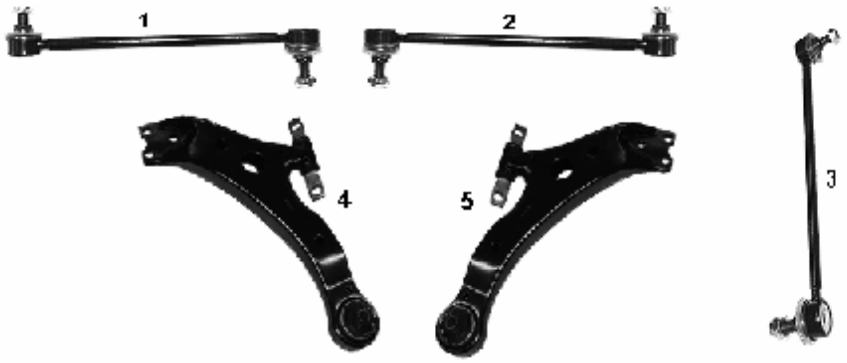


| NR | MAPCO | REF | | | ← | → | ↑ | ↓ | | | NEW | INFO |
|---|---|---|---|---|---|---|---|---|---|---|---|---|
| 1 | 49280HPS | 48810-33010 | ✓ | | ✓ | | | | ✓ | ✓ | | |
| 2 | 49281HPS | 48820-33020 | ✓ | | | ✓ | | | ✓ | ✓ | | |
| 3 | 49282HPS | 48830-32040 | | ✓ | ✓ | ✓ | | | ✓ | ✓ | | 4x4 |
| 4 | 51552 | 48069-33050 | ✓ | | ✓ | | | | ✓ | ✓ | ✓ | ✓ 3.0 V6 |
| 5 | 51553 | 48068-33070 | ✓ | | | ✓ | | | ✓ | ✓ | ✓ | ✓ 3.0 V6 |

## TOYOTA CAMRY (_V30) 11/01→

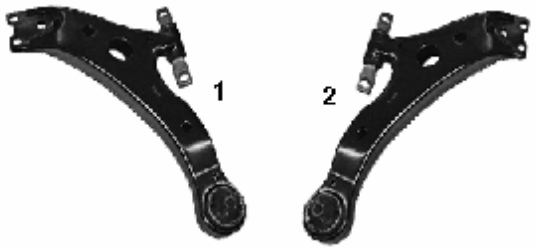


| NR | MAPCO | REF | | | ← | → | ↑ | ↓ | | | NEW | INFO |
|---|---|---|---|---|---|---|---|---|---|---|---|---|
| 1 | 51552 | 48069-33050 | ✓ | | ✓ | | | | ✓ | ✓ | ✓ | |
| 2 | 51553 | 48068-33070 | ✓ | | | ✓ | | | ✓ | ✓ | ✓ | |

## TOYOTA CARINA II _T15_ 01/84→ 03/88

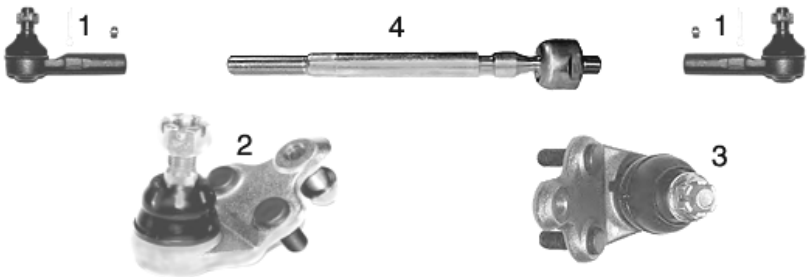


| NR | MAPCO | REF | | | ← | → | ↑ | ↓ | | | NEW | INFO |
|---|---|---|---|---|---|---|---|---|---|---|---|---|
| 1 | 19560 | 45046-19175 | ✓ | | ✓ | ✓ | | | ✓ | ✓ | | M14 x1,5RHT |
| 2 | 59565 | 43330-29145 | ✓ | | ✓ | ✓ | | | ✓ | | | |
| 3 | 59323 | 43330-29135 | ✓ | | ✓ | ✓ | | | | ✓ | | |
| 4 | 59332 | 45503-19036 | ✓ | | ✓ | ✓ | | | ✓ | ✓ | | M14x1,5RHT L=330mm |
| | | | | | | | | | | | | |

## TOYOTA CARINA II (_T17) 12/87→ 06/93

| NR | MAPCO | REF | | | ← | → | ↑ | ↓ | | | NEW | INFO |
|---|---|---|---|---|---|---|---|---|---|---|---|---|
| 1 | 59279 | 45047-29045 | ✓ | | ✓ | | | | ✓ | ✓ | | |
| 2 | 59275 | 45046-29165 | ✓ | | | ✓ | | | ✓ | ✓ | | |
| 3 | 59265 | 45503-29165 | ✓ | | ✓ | ✓ | | | ✓ | | | SMI |
| 4 | 59264 | 45503-29155 | ✓ | | ✓ | ✓ | | | | ✓ | | SMI |

## TOYOTA CARINA E _T19_ 04/92→ 09/97

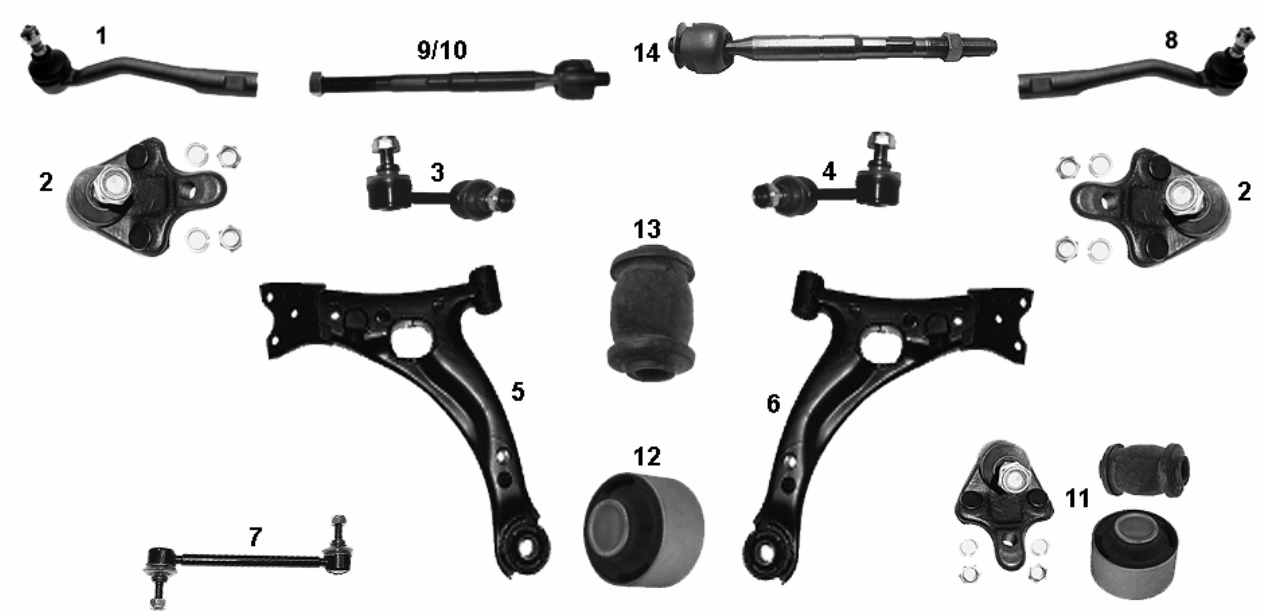


| NR | MAPCO | REF | | | ← | → | ↑ | ↓ | | | NEW | INFO |
|---|---|---|---|---|---|---|---|---|---|---|---|---|
| 1 | 59281 | 45047-29075 | ✓ | | ✓ | | | | ✓ | ✓ | | |
| 2 | 19571 | 43330-29375 | ✓ | | ✓ | ✓ | | | ✓ | ✓ | | |
| 3 | 19576 | 48810-20010 | ✓ | | ✓ | | | | ✓ | ✓ | | |
| 4 | 19575 | 48820-20030 | ✓ | | | ✓ | | | ✓ | ✓ | | |
| 5 | 49574 | 48069-20260 | ✓ | | ✓ | | | | ✓ | ✓ | | TYP A |
| 6 | 49575 | 48068-20260 | ✓ | | | ✓ | | | ✓ | ✓ | | TYP A |
| 7 | 49579 | 48830-32010 | | ✓ | ✓ | ✓ | | | ✓ | ✓ | | |
| 8 | 59277 | 45046-29275 | ✓ | | | ✓ | | | ✓ | ✓ | | |
| 9 | 49288 | 45503-29435 | ✓ | | ✓ | ✓ | | | ✓ | ✓ | | **Toyota Lenkung/ steering** |
| 10 | 49289 | 45503-05010 | ✓ | | ✓ | ✓ | | | ✓ | ✓ | | 1995-09/97 |
| 11 | 19252 | | ✓ | | ✓ | ✓ | | | ✓ | ✓ | ✓ | **Kit** |
| 12 | 33563 | 48655-52014 | ✓ | | ✓ | ✓ | | | ✓ | ✓ | ✓ | |
| 13 | 33564 | 48654-20170 | ✓ | | ✓ | ✓ | | | ✓ | ✓ | ✓ | |
| 14 | 59270 | 45503-29475 | ✓ | | ✓ | ✓ | | | ✓ | ✓ | ✓ | ✓ **1.8 107 PS** |
| | | | | | | | | | | | | ✓ |

## TOYOTA CELICA _T16 — 12/85→ 12/89

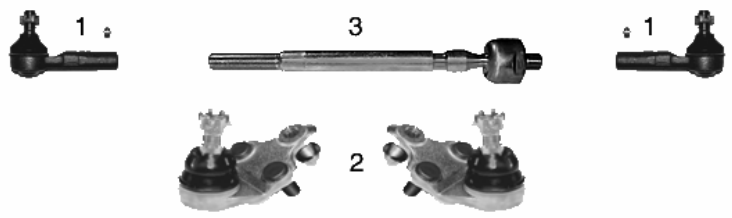


| NR | MAPCO | REF | | | ← | → | ↑ | ↓ | | | NEW | INFO |
|---|---|---|---|---|---|---|---|---|---|---|---|---|
| 1 | 19560 | 45046-19175 | ✓ | | ✓ | ✓ | | | ✓ | ✓ | | M14 x 1,5 RHT |
| 2 | 59565 | 43330-29145 | ✓ | | ✓ | ✓ | | | ✓ | ✓ | | |
| 3 | 59332 | 45503-19036 | ✓ | | ✓ | ✓ | | | ✓ | ✓ | | M14x1,5RHT L=330mm |

## TOYOTA CELICA _T18 — 10/89→ 01/94

| NR | MAPCO | REF | | | ← | → | ↑ | ↓ | | | NEW | INFO |
|---|---|---|---|---|---|---|---|---|---|---|---|---|
| 1 | 59234 | 43330-29225 | ✓ | | ✓ | ✓ | | ✓ | ✓ | ✓ | | |

## TOYOTA CELICA (_T20_) — 11/93→ 11/99

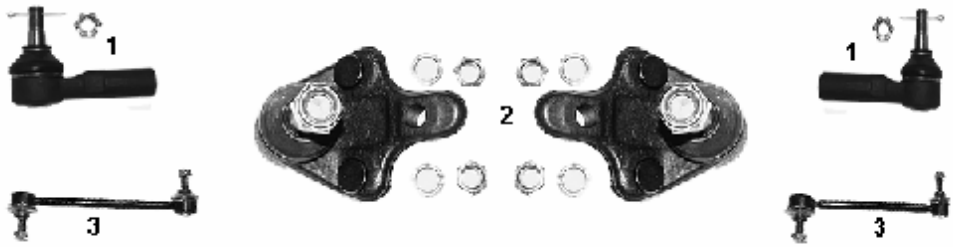


| NR | MAPCO | REF | | | ← | → | ↑ | ↓ | | | NEW | INFO |
|---|---|---|---|---|---|---|---|---|---|---|---|---|
| 1 | 19570 | 45046-29305 | ✓ | | ✓ | ✓ | | | ✓ | ✓ | | |
| 2 | 19571 | 43330-29375 | ✓ | | ✓ | ✓ | | | ✓ | ✓ | | |
| 3 | 49579 | 48830-32010 | | ✓ | ✓ | ✓ | | | ✓ | ✓ | | |

## TOYOTA CELICA (ZZT23) — 11/99→

| NR | MAPCO | REF | | | ← | → | ↑ | ↓ | | | NEW | INFO |
|---|---|---|---|---|---|---|---|---|---|---|---|---|
| 1 | 51597 | 48820-32010 | ✓ | | ✓ | ✓ | | | ✓ | ✓ | ✓ | L= 285,0 mm 1 |

## TOYOTA COROLLA EE80 – CE80 12/84→ 12/87

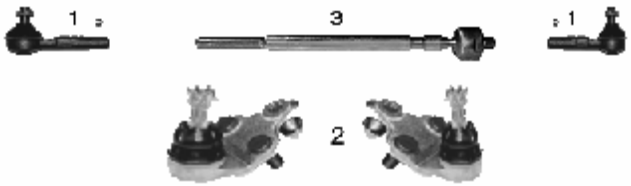


| NR | MAPCO | REF | | | ← | → | ↑ | ↓ | | | NEW | INFO |
|---|---|---|---|---|---|---|---|---|---|---|---|---|
| 1 | 19560 | 45046-19175 | ✓ | | ✓ | ✓ | | | ✓ | ✓ | | M14 x 1,5 RHT |
| 2 | 59323 | 43330-29137 | ✓ | | ✓ | ✓ | | | ✓ | ✓ | | |
| 3 | 59332 | 45503-19036 | ✓ | | ✓ | ✓ | | | ✓ | ✓ | | M14x1,5RHT L=330mm |

## TOYOTA COROLLA AE 92, EE90 08/87→ 1992

| NR | MAPCO | REF | | | ← | → | ↑ | ↓ | | | NEW | INFO |
|---|---|---|---|---|---|---|---|---|---|---|---|---|
| 1 | 19560 | 45046-19175 | ✓ | | ✓ | ✓ | | | ✓ | ✓ | | M14 x 1,5 RHT |
| 2 | 19561 | 43340-19015 | ✓ | | ✓ | | | | ✓ | ✓ | | |
| 3 | 19562 | 43330-19065 | ✓ | | | ✓ | | | ✓ | ✓ | | |
| 4 | 19564 | 45503-19125 | ✓ | | ✓ | ✓ | | | | ✓ | | |
| 5 | 19565 | 45503-19135 | ✓ | | ✓ | ✓ | | | ✓ | | | |
| 6 | 19574 | 48820-20010 | ✓ | | ✓ | ✓ | | | ✓ | ✓ | | ✓ 1600i |
| 7 | 19572 | 48820-20021 | ✓ | | ✓ | ✓ | | | ✓ | ✓ | | |
| 8 | 33560 | 48654-12050 | ✓ | | ✓ | ✓ | | | ✓ | ✓ | | |
| 9 | 19579 | 48830-20010 | | ✓ | ✓ | ✓ | | | ✓ | ✓ | | |
| 10 | 49276 | 48069-12110 | ✓ | | ✓ | | | | ✓ | ✓ | | |
| 11 | 49277 | 48068-12110 | ✓ | | | ✓ | | | ✓ | ✓ | | |

## TOYOTA COROLLA _E9_ 1988→ 06/92

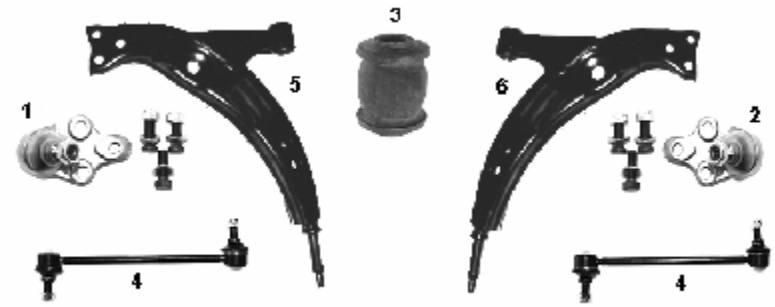


| NR | MAPCO | REF | | | ← | → | ↑ | ↓ | | | NEW | INFO |
|---|---|---|---|---|---|---|---|---|---|---|---|---|
| 1 | 19568 | 43340-19016 | ✓ | | ✓ | | | | ✓ | ✓ | | |
| 2 | 19569 | 43330-19066 | ✓ | | | ✓ | | | ✓ | ✓ | | |
| 3 | 33560 | 48654-12050 | ✓ | | ✓ | ✓ | | | ✓ | ✓ | | |
| 4 | 49579 | 48830-32010 | | ✓ | ✓ | ✓ | | | ✓ | ✓ | | |
| 5 | 49276 | 48069-12110 | ✓ | | ✓ | | | | ✓ | ✓ | | |
| 6 | 49277 | 48068-12110 | ✓ | | | ✓ | | | ✓ | ✓ | | |

## TOYOTA COROLLA _E10_ 07/92→ 04/97

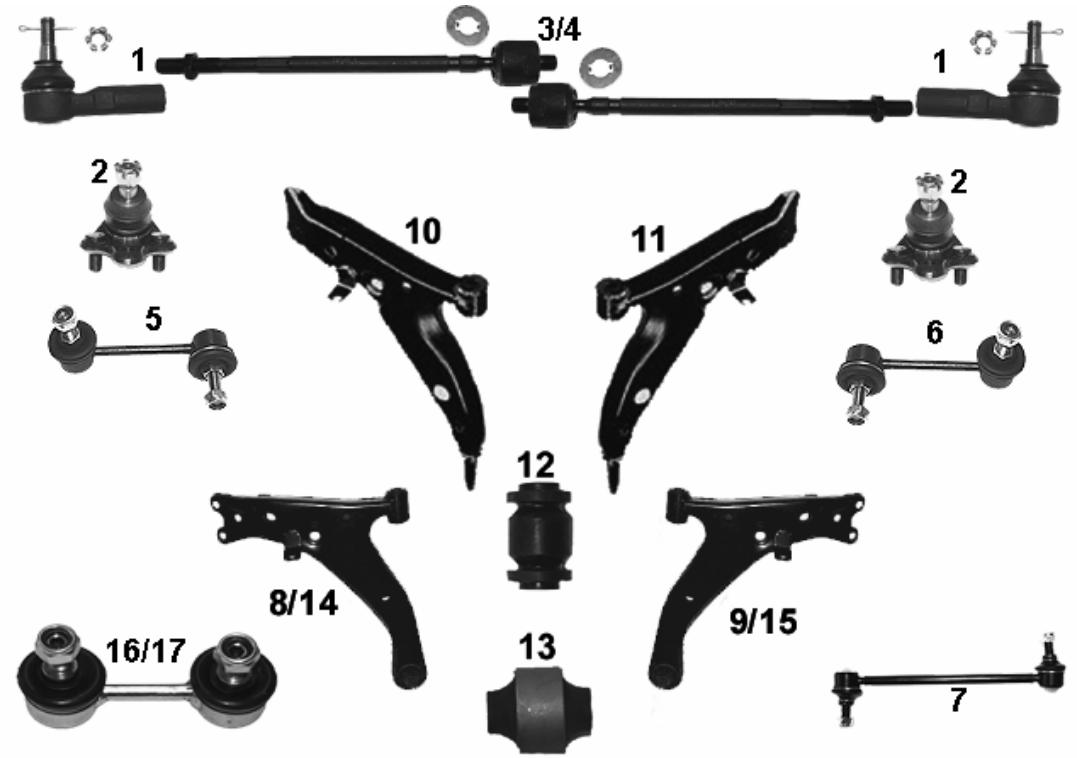


| NR | MAPCO | REF | | | ← | → | ↑ | ↓ | | | NEW | INFO |
|---|---|---|---|---|---|---|---|---|---|---|---|---|
| 1 | 19560 | 45046-19175 | ✓ | | ✓ | ✓ | | | ✓ | ✓ | | M14 x 1,5 RHT |
| 2 | 19563 | 43330-29265 | ✓ | | ✓ | ✓ | | | ✓ | ✓ | | |
| 3 | 19566 | 45503-29385 | ✓ | | ✓ | ✓ | | | | ✓ | | |
| 4 | 19567 | 45503-19215 | ✓ | | ✓ | ✓ | | | ✓ | | | |
| 5 | 19577 | 48810-20020 | ✓ | | ✓ | | | | ✓ | ✓ | | |
| 6 | 19578 | 48820-20040 | ✓ | | | ✓ | | | ✓ | ✓ | | |
| 7 | 19579 | 48830-20010 | | ✓ | ✓ | ✓ | | | ✓ | ✓ | | |
| 8 | 49572 | 48069-12190 | ✓ | | ✓ | | | | ✓ | ✓ | | ✓ _E 110 |
| 9 | 49573 | 48068-12190 | ✓ | | | ✓ | | | ✓ | ✓ | | ✓ _E 110 |
| 10 | 49570 | 48069-12140 | ✓ | | ✓ | | | | ✓ | ✓ | | ✓ _E100→05/1995 |
| 11 | 49571 | 48068-12140 | ✓ | | | ✓ | | | ✓ | ✓ | | ✓ _E100→05/1995 |
| 12 | 33561 | 48654-12070-2 | ✓ | | ✓ | ✓ | | | ✓ | ✓ | | |
| 13 | 33562 | 48655-12120 | ✓ | | ✓ | ✓ | | | ✓ | ✓ | | ✓ AE 110 |
| 14 | 49550 | 48069-02010 | ✓ | | ✓ | | | | ✓ | ✓ | | ✓ _E101 06/1995→ |
| 15 | 49551 | 48068-02010 | ✓ | | | ✓ | | | ✓ | ✓ | | ✓ _E101 06/1995→ |
| 16 | 19572 | 48820-20021 | ✓ | | ✓ | ✓ | | | ✓ | ✓ | | →12/93 |
| 17 | 19573 | 48820-33010 | ✓ | | ✓ | ✓ | | | ✓ | ✓ | | 12/93→ |

## TOYOTA COROLLA _EE11_, _ZE11_ 05/97→01/02

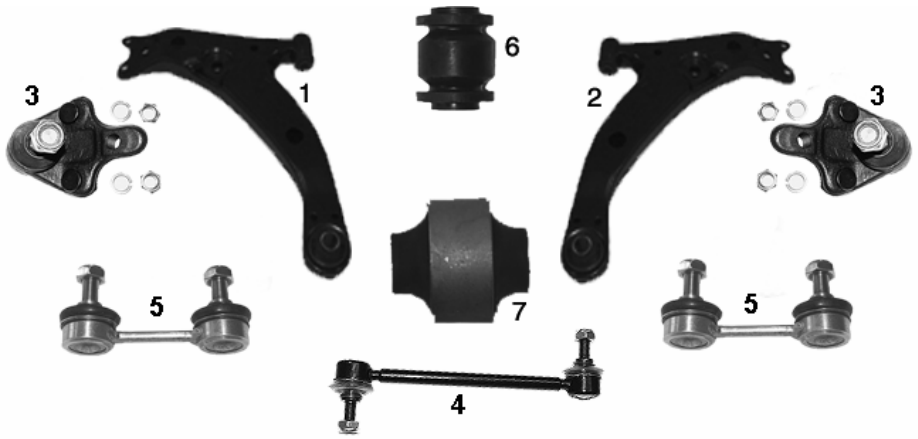


| NR | MAPCO | REF | | | ← | → | ↑ | ↓ | | | NEW | INFO |
|---|---|---|---|---|---|---|---|---|---|---|---|---|
| 1 | 49550 | 48069-02010 | ✓ | | ✓ | | | | ✓ | ✓ | | |
| 2 | 49551 | 48068-02010 | ✓ | | | ✓ | | | ✓ | ✓ | | |
| 3 | 49552 | 43330-19115 | ✓ | | ✓ | ✓ | | | ✓ | ✓ | | |
| 4 | 49553 | 48830-12060 | | ✓ | ✓ | ✓ | | | ✓ | ✓ | | →08/1998 |
| 5 | 19573 | 48820-33010 | ✓ | | ✓ | ✓ | | | ✓ | ✓ | | |
| 6 | 33561 | 48654-12070-2 | ✓ | | ✓ | ✓ | | | ✓ | ✓ | | |
| 7 | 33562 | 48655-12120 | ✓ | | ✓ | ✓ | | | ✓ | ✓ | | |

## TOYOTA COROLLA _E12_ 01/02→
## TOYOTA COROLLA VERSO _E12J_ 01/02→

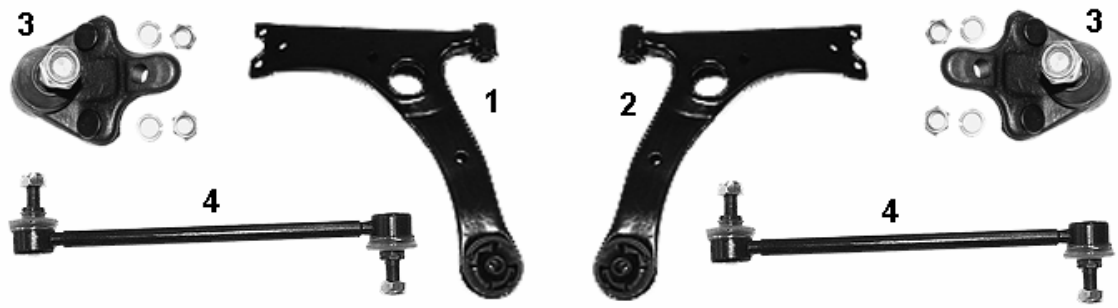


| NR | MAPCO | REF | | | ← | → | ↑ | ↓ | | | NEW | INFO |
|---|---|---|---|---|---|---|---|---|---|---|---|---|
| 1 | 51560 | 48069-12260 | ✓ | | ✓ | | | | ✓ | ✓ | ✓ | |
| 2 | 51561 | 48068-12260 | ✓ | | | ✓ | | | ✓ | ✓ | ✓ | |
| 3 | 49552 | 43330-19115 | ✓ | | ✓ | ✓ | | | ✓ | ✓ | | |
| 4 | 51577 | 48820-47010 | ✓ | | ✓ | ✓ | | | ✓ | ✓ | ✓ | L=285,0mm |

## TOYOTA HIACE II 03/83→ 11/89

| NR | MAPCO | REF | | | ← | → | ↑ | ↓ | | | NEW | INFO |
|---|---|---|---|---|---|---|---|---|---|---|---|---|
| 1 | 59335 | 43330-29125 | ✓ | | ✓ | ✓ | | ✓ | ✓ | ✓ | | 18,2mm |
| | | | | | | | | | | | | |

## TOYOTA HIACE III 08/89→ 08/95

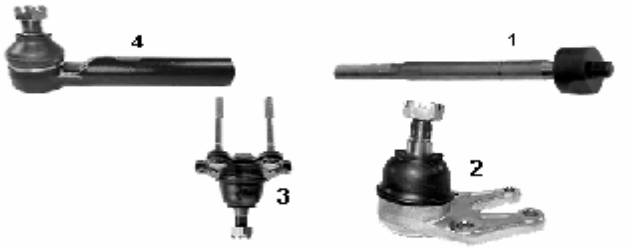


| NR | MAPCO | REF | | | ← | → | ↑ | ↓ | | | NEW | INFO |
|---|---|---|---|---|---|---|---|---|---|---|---|---|
| 1 | **59266** | 45503-29255 | ✓ | | ✓ | ✓ | | | ✓ | ✓ | | |
| 2 | **59335** | 43330-29125 | ✓ | | ✓ | ✓ | | ✓ | ✓ | ✓ | | 18,2mm |
| 3 | **59235** | 43350-29095 | ✓ | | ✓ | ✓ | ✓ | | ✓ | ✓ | | |
| 4 | **59238** | 45046-29215 | ✓ | | ✓ | ✓ | | | ✓ | ✓ | | M17x1,5 RHT |

## TOYOTA HIACE IV 08/95→

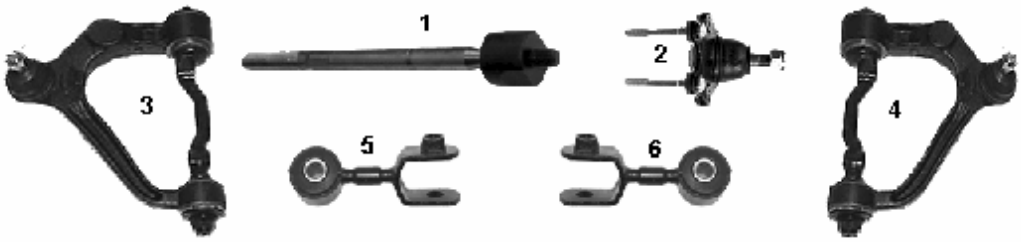


| NR | MAPCO | REF | | | ← | → | ↑ | ↓ | | | NEW | INFO |
|---|---|---|---|---|---|---|---|---|---|---|---|---|
| 1 | **59266** | 45503-29255 | ✓ | | ✓ | ✓ | | | ✓ | ✓ | | |
| 2 | **59235** | 43350-29095 | ✓ | | ✓ | ✓ | ✓ | | ✓ | ✓ | | |
| 3 | **59285** | 48067-29075 | ✓ | | ✓ | | ✓ | | ✓ | ✓ | | |
| 4 | **59286** | 48066-29075 | ✓ | | | ✓ | ✓ | | ✓ | ✓ | | |
| 5 | **51588** | 48810-26030 | ✓ | | ✓ | | | | ✓ | ✓ | ✓ | |
| 6 | **51589** | 48820-26030 | ✓ | | | ✓ | | | ✓ | ✓ | ✓ | |

## TOYOTA HILUX Pick-up _N_ 01/84→

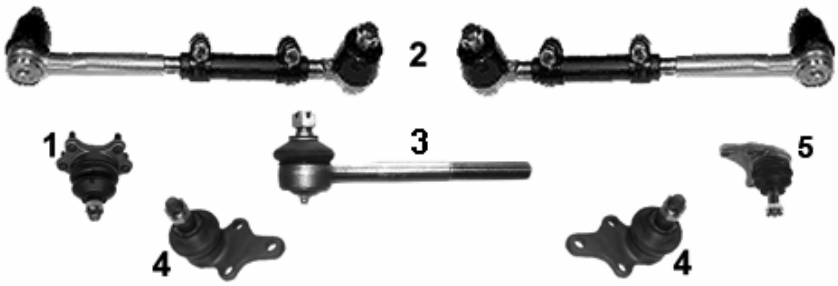


| NR | MAPCO | REF | | | ← | → | ↑ | ↓ | | | NEW | INFO |
|---|---|---|---|---|---|---|---|---|---|---|---|---|
| 1 | **59261** | 43350-39045 | ✓ | | ✓ | ✓ | ✓ | | ✓ | ✓ | | 17mm |
| 2 | **59262** | 45460-29215 | ✓ | | ✓ | ✓ | | | ✓ | ✓ | | |
| 3 | **59282** | 45046-39125 | ✓ | | ✓ | ✓ | | | ✓ | ✓ | | |
| 4 | **59569** | 43330-39245 | ✓ | | ✓ | ✓ | | ✓ | ✓ | ✓ | | |
| 5 | **59236** | 43350-39035 | ✓ | | ✓ | ✓ | ✓ | | ✓ | ✓ | | 15mm |

## TOYOTA LAND CRUISER (_J7_) 11/84→
## TOYOTA LAND CRUISER Hardtop (_J7_) 07/90→ 05/96

| NR | MAPCO | REF | | | ← | → | ↑ | ↓ | | | NEW | INFO |
|---|---|---|---|---|---|---|---|---|---|---|---|---|
| 1 | 51573 | 48820-60010 | ✓ | | ✓ | ✓ | | | ✓ | ✓ | ✓ | |
| 2 | 51576 | 48830-60010 | | ✓ | ✓ | ✓ | | | ✓ | ✓ | ✓ | |

## TOYOTA LAND CRUISER (_J9_) 04/95→

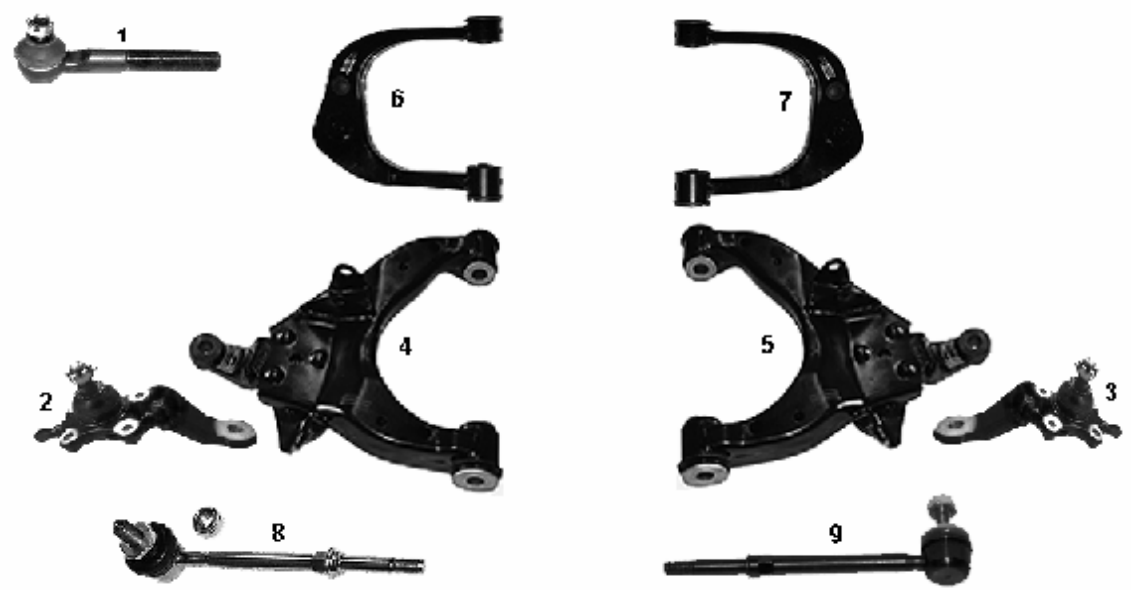


| NR | MAPCO | REF | | | ← | → | ↑ | ↓ | | | NEW | INFO |
|---|---|---|---|---|---|---|---|---|---|---|---|---|
| 1 | 59237 | 45045-69065 | ✓ | | ✓ | | | | ✓ | ✓ | | M21x1,5 RHT |
| 2 | 59353 | 43340-39325 | ✓ | | ✓ | | | ✓ | ✓ | ✓ | | |
| 3 | 59354 | 43330-39415 | ✓ | | | ✓ | | ✓ | ✓ | ✓ | | |
| 4 | 59391 | 48069-35081 | ✓ | | ✓ | | | ✓ | ✓ | ✓ | | Lenkerarm / wishbone arm 03/98→ |
| 5 | 59392 | 48068-35081 | ✓ | | | ✓ | | ✓ | ✓ | ✓ | | Lenkerarm / wishbone arm 03/98→ |
| 6 | 51571 | 48630-35020 | ✓ | | ✓ | | ✓ | | ✓ | ✓ | ✓ | Lenkerarm / wishbone arm |
| 7 | 51572 | 48610-35040 | ✓ | | | ✓ | ✓ | | ✓ | ✓ | ✓ | Lenkerarm / wishbone arm |
| 8 | 51569 | 48820-35030 | ✓ | | ✓ | ✓ | | | ✓ | ✓ | ✓ | |
| 9 | 51570 | 48830-35020 | | ✓ | ✓ | ✓ | | | ✓ | ✓ | ✓ | |

## TOYOTA LAND CRUISER 100 (_J10_) 01/98→

| NR | MAPCO | REF | | | ← | → | ↑ | ↓ | | | NEW | INFO |
|---|---|---|---|---|---|---|---|---|---|---|---|---|
| 1 | 51574 | 48820-60032 | ✓ | | ✓ | ✓ | | | ✓ | ✓ | ✓ | |

## TOYOTA LAND CRUISER (_J12_) 01/03→

| NR | MAPCO | REF | | | ← | → | ↑ | ↓ | | | NEW | INFO |
|---|---|---|---|---|---|---|---|---|---|---|---|---|
| 1 | 51568 | 48810-60010 | ✓ | | ✓ | ✓ | | | ✓ | ✓ | ✓ | Aluminium |
| 2 | 51576 | 48830-60010 | | ✓ | ✓ | ✓ | | | ✓ | ✓ | ✓ | |

## TOYOTA LITEACE 10/85→ 01/92

| NR | MAPCO | REF | | | ← | → | ↑ | ↓ | | | NEW | INFO |
|---|---|---|---|---|---|---|---|---|---|---|---|---|
| 1 | 59318 | 43330-29115 | ✓ | | ✓ | ✓ | | ✓ | ✓ | ✓ | | 16,8mm |

## TOYOTA MR 2 (_W1_) 10/84→ 05/00

| NR | MAPCO | REF | | | ← | → | ↑ | ↓ | | | NEW | INFO |
|---|---|---|---|---|---|---|---|---|---|---|---|---|
| 1 | 59334 | 43330-19025 | ✓ | | ✓ | ✓ | | ✓ | ✓ | ✓ | | 14,3mm |

## TOYOTA PASEO 08/95→03/99
## TOYOTA PASEO 08/95→07/99

| NR | MAPCO | REF | | | ← | → | ↑ | ↓ | | | NEW | INFO |
|---|---|---|---|---|---|---|---|---|---|---|---|---|
| 1 | 59263 | 45503-19155 | ✓ | | ✓ | ✓ | | | ✓ | ✓ | | |
| 2 | 59273 | 45046-19065 | ✓ | | ✓ | ✓ | | | ✓ | ✓ | | |
| 3 | 59274 | 45046-19213 | ✓ | | ✓ | ✓ | | | ✓ | ✓ | | |
| 4 | 59568 | 43340-19025 | ✓ | | ✓ | | | ✓ | ✓ | ✓ | | |
| 5 | 59288 | 48069-16060 | ✓ | | ✓ | | | ✓ | ✓ | ✓ | | |
| 6 | 59287 | 48068-16060 | ✓ | | | ✓ | | ✓ | ✓ | ✓ | | |
| 7 | 59564 | 43330-19025 | ✓ | | | ✓ | | ✓ | ✓ | ✓ | | |

## TOYOTA PREVIA (TCR10) 05/90→ 08/00

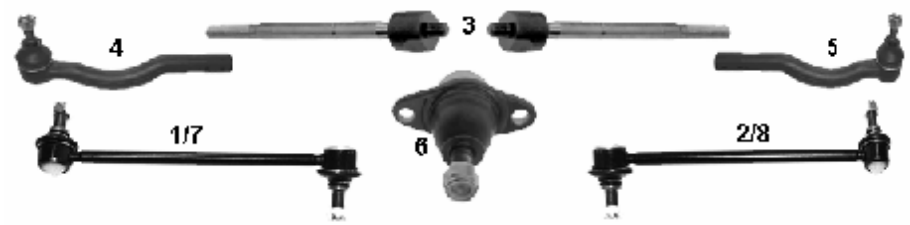


| NR | MAPCO | REF | | | ← | → | ↑ | ↓ | | | NEW | INFO |
|---|---|---|---|---|---|---|---|---|---|---|---|---|
| 1 | 49283HPS | 48810-28020 | ✓ | | ✓ | | | | ✓ | ✓ | | M10x1,25 |
| 2 | 49284HPS | 48820-28030 | ✓ | | | ✓ | | | ✓ | ✓ | | M10x1,25 |
| 3 | 59267 | 45503-29295 | ✓ | | ✓ | ✓ | | | ✓ | ✓ | | |
| 4 | 59280 | 45047-29065 | ✓ | | ✓ | | | | ✓ | ✓ | | |
| 5 | 59239 | 45046-29235 | ✓ | | | ✓ | | | ✓ | ✓ | | |
| 6 | 59566 | 43330-29235 | ✓ | | ✓ | ✓ | | | ✓ | ✓ | | |
| 7 | 59361HPS | 48810-28010 | ✓ | | ✓ | | | | ✓ | ✓ | | M12x1,25 |
| 8 | 59362HPS | 48820-28010 | ✓ | | | ✓ | | | ✓ | ✓ | | M12x1,25 |

## TOYOTA PREVIA (ACR3_) 08/00→

| NR | MAPCO | REF | | | ← | → | ↑ | ↓ | | | NEW | INFO |
|---|---|---|---|---|---|---|---|---|---|---|---|---|
| 1 | 59293 | 45503-29765 | ✓ | | ✓ | ✓ | | | ✓ | ✓ | | |
| 2 | 59363HPS | 48820-28050 | ✓ | | ✓ | ✓ | | | ✓ | ✓ | | |

## TOYOTA PRIUS 05/00 →

| NR | MAPCO | REF | | | ← | → | ↑ | ↓ | | | NEW | INFO |
|---|---|---|---|---|---|---|---|---|---|---|---|---|
| 1 | 51577 | 48820-47010 | ✓ | | ✓ | ✓ | | | ✓ | ✓ | ✓ | L=285,0mm |

## TOYOTA RAV 4 I 2.0 16V 06/94→ 06/00

| NR | MAPCO | REF | | | ← | → | ↑ | ↓ | | | NEW | INFO |
|---|---|---|---|---|---|---|---|---|---|---|---|---|
| 1 | **19570** | 45046-29305 | ✓ | | ✓ | ✓ | | | ✓ | ✓ | | |
| 2 | **49579** | 48830-32010 | | ✓ | ✓ | ✓ | | | ✓ | ✓ | | |
| 3 | **49272** | 48069-42022 | ✓ | | ✓ | | | | ✓ | ✓ | | |
| 4 | **49273** | 48068-42012 | ✓ | | | ✓ | | | ✓ | ✓ | | |
| 5 | **49274** | 48820-42010 | ✓ | | ✓ | ✓ | | | ✓ | ✓ | | 1997→ |
| 6 | **19573** | 48820-33010 | ✓ | | ✓ | ✓ | | | ✓ | ✓ | | 1992→1997 |
| 7 | **19563** | 43330-19115 | ✓ | | ✓ | ✓ | | | ✓ | ✓ | | |

## TOYOTA RAV 4 II (XA2) 06/00→

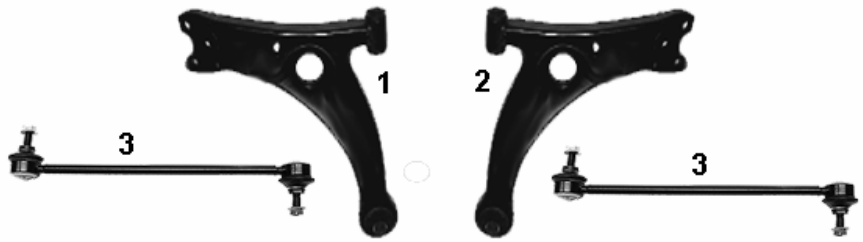


| NR | MAPCO | REF | | | ← | → | ↑ | ↓ | | | NEW | INFO |
|---|---|---|---|---|---|---|---|---|---|---|---|---|
| 1 | **59380** | 48069-42040 | ✓ | | ✓ | | | | ✓ | ✓ | | Lenkerarm / wishbone arm |
| 2 | **59381** | 48068-42040 | ✓ | | | ✓ | | | ✓ | ✓ | | Lenkerarm / wishbone arm |
| 3 | **49237HPS** | 48820-42020 | ✓ | | ✓ | ✓ | | | ✓ | ✓ | ✓ | M10x1,25 L=260mm |
| | | | | | | | | | | | | |

## TOYOTA STARLET _P7_ 10/84→12/92

| NR | MAPCO | REF | | | ← | → | ↑ | ↓ | | | NEW | INFO |
|---|---|---|---|---|---|---|---|---|---|---|---|---|
| 1 | **59563** | 43330-19045 | ✓ | | ✓ | ✓ | | | ✓ | ✓ | | |
| | | | | | | | | | | | | |

## TOYOTA STARLET _P8_ 12/89→03/96

| NR | MAPCO | REF | | | ← | → | ↑ | ↓ | | | NEW | INFO |
|---|---|---|---|---|---|---|---|---|---|---|---|---|
| 1 | 59263 | 45503-19195 | ✓ | | ✓ | ✓ | | | ✓ | ✓ | | |
| 2 | 59273 | 45046-19065 | ✓ | | ✓ | ✓ | | | ✓ | ✓ | | |
| 3 | 59274 | 45046-19213 | ✓ | | ✓ | ✓ | | | ✓ | ✓ | | |
| 4 | 59568 | 43340-19025 | ✓ | | ✓ | | | ✓ | ✓ | ✓ | | |
| 5 | 59564 | 43330-19025 | ✓ | | | ✓ | | ✓ | ✓ | ✓ | | |

## TOYOTA STARLET _EP91_ 04/96→03/99

| NR | MAPCO | REF | | | ← | → | ↑ | ↓ | | | NEW | INFO |
|---|---|---|---|---|---|---|---|---|---|---|---|---|
| 1 | 59568 | 43340-19025 | ✓ | | ✓ | | | | ✓ | ✓ | | |
| 2 | 59564 | 43330-19025 | ✓ | | | ✓ | | | ✓ | ✓ | ✓ | |

## TOYOTA SUPRA (JZA80) 05/93→08/98

| NR | MAPCO | REF | | | ← | → | ↑ | ↓ | | | NEW | INFO |
|---|---|---|---|---|---|---|---|---|---|---|---|---|
| 1 | 51579 | 48820-24010 | | ✓ | ✓ | ✓ | | | ✓ | ✓ | ✓ | L= 110,0 mm |
| | | | | | | | | | | | | |

## TOYOTA TERCEL 03/79→ 01/88

| NR | MAPCO | REF | | | ← | → | ↑ | ↓ | | | NEW | INFO |
|---|---|---|---|---|---|---|---|---|---|---|---|---|
| 1 | 59334 | 43330-19025 | ✓ | | ✓ | ✓ | | ✓ | ✓ | ✓ | | 14,3mm |
| | | | | | | | | | | | | |

## TOYOTA YARIS (_CP10) 04/99→

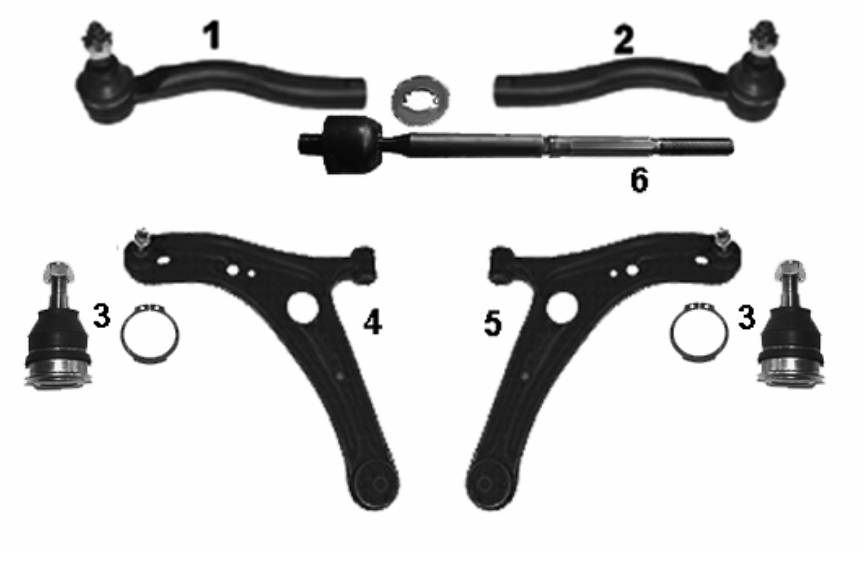


| NR | MAPCO | REF | | | ← | → | ↑ | ↓ | | | NEW | INFO |
|---|---|---|---|---|---|---|---|---|---|---|---|---|
| 1 | **59560** | 45047-59026 | ✓ | | ✓ | | | | ✓ | ✓ | | |
| 2 | **59561** | 45046-59026 | ✓ | | | ✓ | | | ✓ | ✓ | | |
| 3 | **59562** | 48069-59035 part | ✓ | | ✓ | ✓ | | ✓ | ✓ | ✓ | | |
| 4 | **49568** | 48069-59035 | ✓ | | ✓ | | | ✓ | ✓ | ✓ | | |
| 5 | **49569** | 48068-59035 | ✓ | | | ✓ | | ✓ | ✓ | ✓ | | |
| 6 | **59294** | 45503-52010 | ✓ | | ✓ | ✓ | | | ✓ | ✓ | | |
| | | | | | | | | | | | | |
| | | | | | | | | | | | | |

## TOYOTA 4-RUNNER (_N130_) 10/93→ 11/95

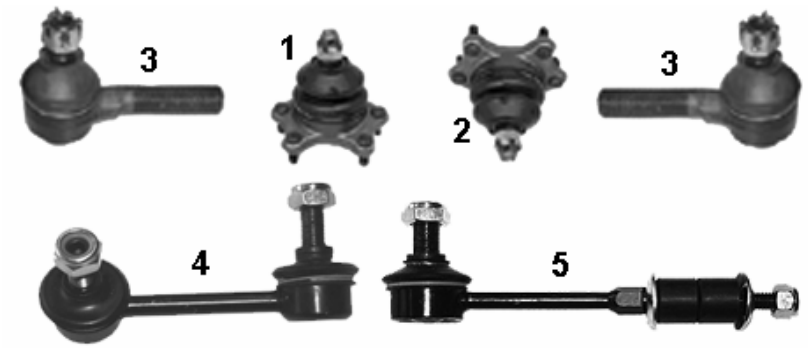


| NR | MAPCO | REF | | | ← | → | ↑ | ↓ | | | NEW | INFO |
|---|---|---|---|---|---|---|---|---|---|---|---|---|
| 1 | **59261** | 43360-39085 | ✓ | | ✓ | ✓ | | ✓ | ✓ | ✓ | | |
| 2 | **59260** | 43330-39265 | ✓ | | ✓ | ✓ | ✓ | | ✓ | ✓ | | |
| 3 | **59278** | 45046-39235 | ✓ | | ✓ | ✓ | | | ✓ | ✓ | | |
| 4 | **51586** | 48820-35010 | ✓ | | ✓ | ✓ | | | ✓ | ✓ | ✓ | |
| 5 | **51587** | 48830-35010 | | ✓ | ✓ | ✓ | | | ✓ | ✓ | ✓ | |
| | | | | | | | | | | | | |
| | | | | | | | | | | | | |

# VOLKSWAGEN

## VOLKSWAGEN BORA 1996→

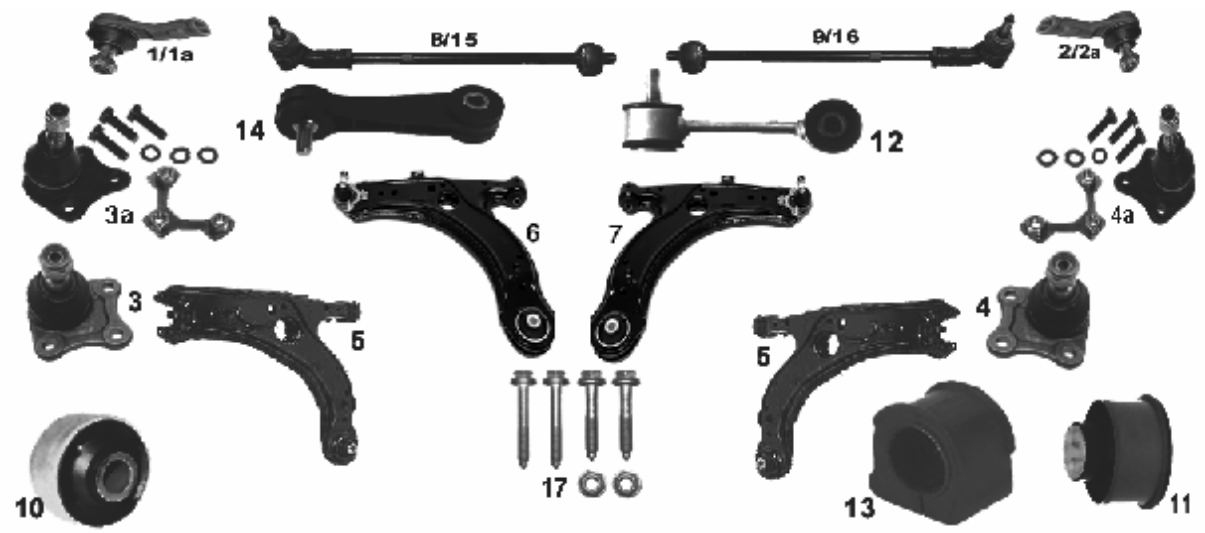


| NR | MAPCO | REF | | | ← | → | ↑ | ↓ | | | NEW | INFO |
|---|---|---|---|---|---|---|---|---|---|---|---|---|
| 1 | 49700 | 1J0 422 811B | ✓ | | ✓ | | | | ✓ | ✓ | | L=94mm M14x1,5RHT, Chassis WP050833→ |
| 1a | 59895 | 1J0 422 811A | ✓ | | ✓ | | | | ✓ | ✓ | | L=75mm M14x1,5RHT, Chassis →WP050832 |
| 2 | 49701 | 1J0 422 812B | ✓ | | | ✓ | | | ✓ | ✓ | | L=94mm M14x1,5RHT, Chassis WP050833→ |
| 2a | 59896 | 1J0 422 812A | ✓ | | | ✓ | | | ✓ | ✓ | | L=75mm M14x1,5RHT, Chassis →WP050832 |
| 3 | 49702 | 1J0 407 365C | ✓ | | ✓ | | | | ✓ | ✓ | | |
| 3a | 49702/1 | 1J0 407 365A | ✓ | | ✓ | | | | ✓ | ✓ | | |
| 4 | 49703 | 1J0 407 366C | ✓ | | | ✓ | | | ✓ | ✓ | | |
| 4a | 49703/1 | 1J0 407 366A | ✓ | | | ✓ | | | ✓ | ✓ | | |
| 5 | 49704 | 1J0 407 151B | ✓ | | ✓ | ✓ | | | ✓ | ✓ | | |
| 6 | 49704/1 | | ✓ | | ✓ | | | | ✓ | ✓ | | **5+3a** |
| 7 | 49704/2 | | ✓ | | | ✓ | | | ✓ | ✓ | | **5+4a** |
| 8 | 49690 | 1J0 422 803B | ✓ | | ✓ | | | | ✓ | ✓ | | Chassis WP050833→ |
| 9 | 49691 | 1J0 422 804B | ✓ | | | ✓ | | | ✓ | ✓ | | Chassis WP050833→ |
| 10 | 33903 | 1J0 407 181 | ✓ | | ✓ | ✓ | | | ✓ | ✓ | | |
| 11 | 33912 | 1J0 501 541C | | ✓ | ✓ | ✓ | | | ✓ | ✓ | | |
| 12 | 49867 | 1J0 411 315C | ✓ | | ✓ | ✓ | | | ✓ | ✓ | | Stahl/steel L=105mm, Ø 23mm |
| 13 | 33927 | 1J0 411 314B | ✓ | | ✓ | ✓ | | | ✓ | ✓ | | Innen Ø 19mm |
| 14 | 49868 | 1J0 411 315C | ✓ | | ✓ | ✓ | | | ✓ | ✓ | | Plastik L= 105mm Ø 21mm |
| 15 | 49869 | 1J0 422 803A | ✓ | | ✓ | | | | ✓ | ✓ | | Chassis→WP050832 |
| 16 | 49870 | 1J0 422 804A | ✓ | | | ✓ | | | ✓ | ✓ | | Chassis→WP050832 |
| 17 | 95704 | | ✓ | | ✓ | ✓ | | | ✓ | ✓ | | MS |

## VOLKSWAGEN CADDY II KASTEN (9K9) 11/95→01/04

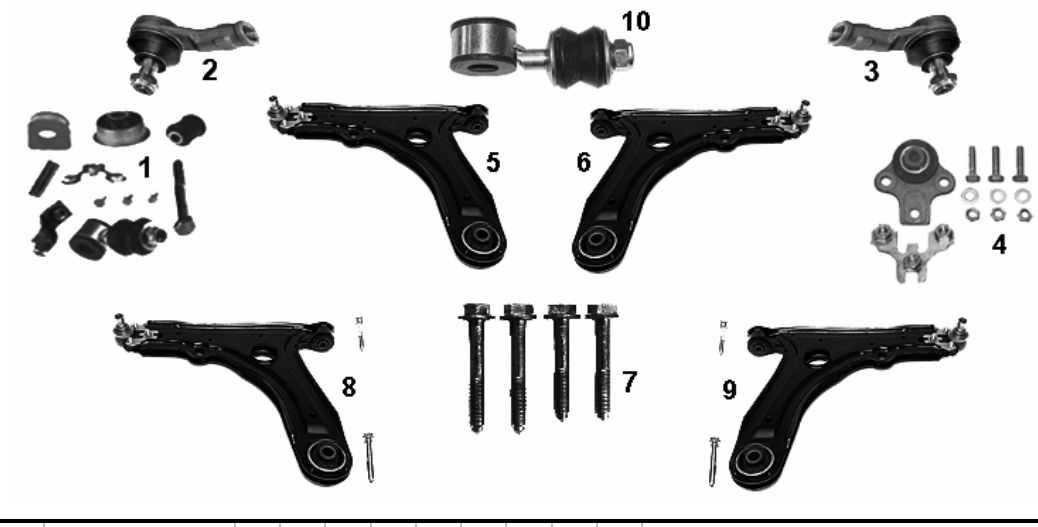


| NR | MAPCO | REF | | | ← | → | ↑ | ↓ | | | NEW | INFO |
|---|---|---|---|---|---|---|---|---|---|---|---|---|
| 1 | 33890 | | ✓ | | ✓ | ✓ | | | ✓ | ✓ | | |
| 2 | 19877 | 191419811 | ✓ | | ✓ | | | | ✓ | ✓ | | M14x1,5RHT |
| 3 | 19878 | 191419812 | ✓ | | | ✓ | | | ✓ | ✓ | | M14x1,5RHT |
| 4 | 19889/1 | 357407365A | ✓ | | ✓ | ✓ | | | ✓ | ✓ | | 19mm |
| 5 | 19858/1 | | ✓ | | ✓ | | | | ✓ | ✓ | | |
| 6 | 19858/2 | | ✓ | | | ✓ | | | ✓ | ✓ | | |
| 7 | 95858 | | ✓ | | ✓ | ✓ | | | ✓ | ✓ | | MS |
| 8 | 19858/7 | | ✓ | | ✓ | | | | ✓ | ✓ | | + |
| 9 | 19858/8 | | ✓ | | | ✓ | | | ✓ | ✓ | | + |
| 10 | 51862 | 191411315A | ✓ | | ✓ | ✓ | | | ✓ | ✓ | ✓ | Ø 18 mm -> 9K V 525700 |

## Volkswagen CADDY III Kombi / Kasten 03/04→

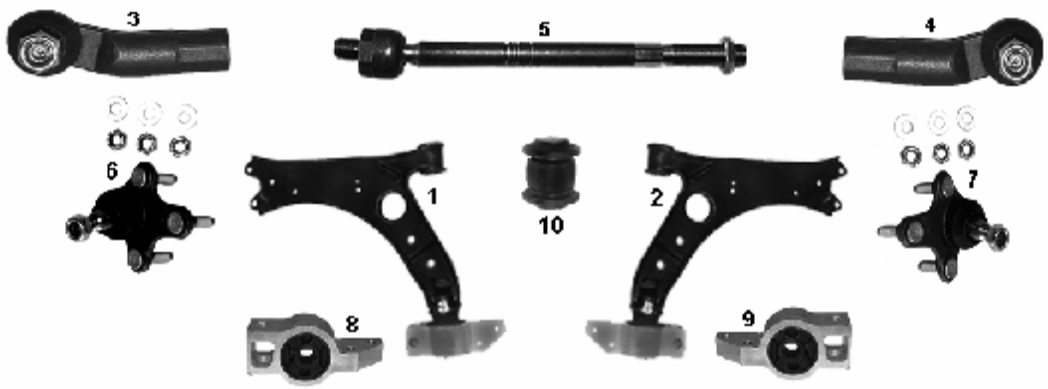


| NR | MAPCO | REF | | | ← | → | ↑ | ↓ | | | NEW | INFO |
|---|---|---|---|---|---|---|---|---|---|---|---|---|
| 1 | 51715 | 1K0 407 151P | ✓ | | ✓ | | | ✓ | ✓ | ✓ | | |
| 2 | 51716 | 1K0 407 152P | ✓ | | | ✓ | | ✓ | ✓ | ✓ | | |
| 3 | 51826 | 1K0 423 811A | ✓ | | ✓ | | | | ✓ | ✓ | | |
| 4 | 51827 | 1K0 423 812A | ✓ | | | ✓ | | | ✓ | ✓ | | |
| 5 | 51723 | 1K0 423 810A | ✓ | | ✓ | ✓ | | | ✓ | ✓ | | M16x1,5RHT L=310 mm |
| 6 | 51724 | 1K0 407 365E | ✓ | | ✓ | | | ✓ | ✓ | ✓ | | Konus 16,00 mm |
| 7 | 51725 | 1K0 407 366E | ✓ | | | ✓ | | ✓ | ✓ | ✓ | | Konus 16,00 mm |
| 8 | 36948 | 1K0 199 231G | ✓ | | ✓ | | | ✓ | ✓ | ✓ | ✓ | |
| 9 | 36949 | 1K0 199 232G | ✓ | | | ✓ | | ✓ | ✓ | ✓ | ✓ | |
| 10 | 36950 | 1K0 407 182 | ✓ | | ✓ | ✓ | | ✓ | ✓ | ✓ | ✓ | |

## VOLKSWAGEN CORRADO (53I) 09/88→12/95

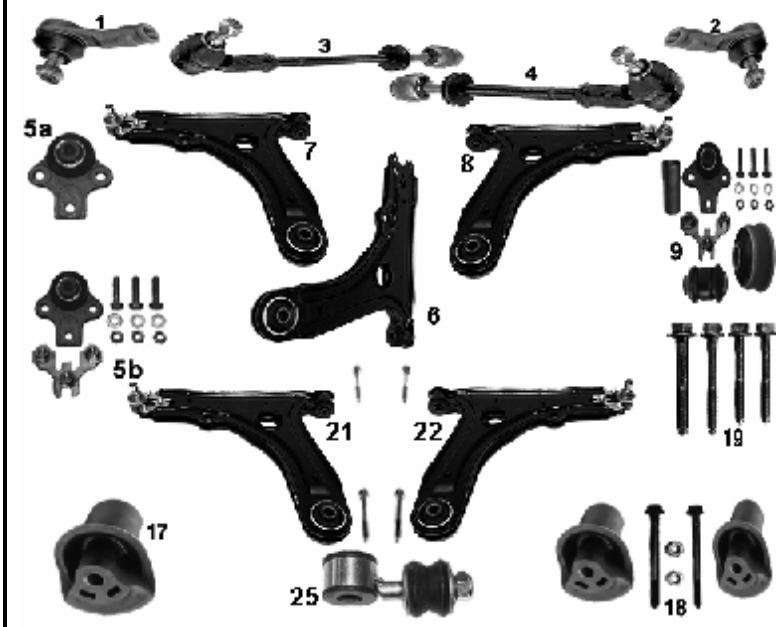


| NR | MAPCO | REF | | | ← | → | ↑ | ↓ | | | NEW | INFO |
|---|---|---|---|---|---|---|---|---|---|---|---|---|
| 1 | 19877 | 191419811 | ✓ | | ✓ | | | | ✓ | ✓ | | M14x1,5RHT |
| 2 | 19878 | 191419812 | ✓ | | | ✓ | | | ✓ | ✓ | | M14x1,5RHT |
| 3 | 19860 | 191422803A | ✓ | | ✓ | | | | ✓ | ✓ | | |
| 4 | 19861 | 191422804A | ✓ | | | ✓ | | | ✓ | ✓ | | |
| 5a | 19889 | 357407365A | ✓ | | ✓ | ✓ | | | ✓ | ✓ | | 19mm |
| 5b | 19889/1 | 357407365A | ✓ | | ✓ | ✓ | | | ✓ | ✓ | | 19mm |
| 6 | 19858 | 191407153B | ✓ | | ✓ | ✓ | | | ✓ | ✓ | | |
| 7 | 19858/1 | | ✓ | | ✓ | | | | ✓ | ✓ | | **6+5b** |
| 8 | 19858/2 | | ✓ | | | ✓ | | | ✓ | ✓ | | **6+5b** |
| 9 | 19289 | | ✓ | | ✓ | ✓ | | | ✓ | ✓ | | Kit |
| 17 | 33833 | 191501541 | | ✓ | | ✓ | ✓ | | ✓ | ✓ | | |
| 18 | 33833/2 | 191501541S | | ✓ | | ✓ | ✓ | | ✓ | ✓ | | Kit |
| 19 | 95858 | | ✓ | | ✓ | ✓ | | | ✓ | ✓ | ✓ | MS |
| 21 | 19858/7 | | ✓ | | ✓ | | | | ✓ | ✓ | ✓ | + 6+5b |
| 22 | 19858/8 | | ✓ | | | ✓ | | | ✓ | ✓ | ✓ | + 6+5b |
| 10 | 49664 | 1H0407151A | ✓ | | ✓ | | | | ✓ | ✓ | | ✓ **2.9 VR6** |
| 11 | 49665 | 1H0407152 | ✓ | | | ✓ | | | ✓ | ✓ | | ✓ **2.9 VR6** |
| 12 | 49666 | | ✓ | | ✓ | | | | ✓ | ✓ | | **10+14a** ✓ **2.9 VR6** |
| 13 | 49667 | | ✓ | | | ✓ | | | ✓ | ✓ | | **11+14a** ✓ **2.9 VR6** |
| 14 | 19679 | 1H0407365 | ✓ | | ✓ | ✓ | | | ✓ | ✓ | | 16,5 mm ✓ **2.9 VR6** |
| 14a | 19679/1 | 1H0407365S | ✓ | | ✓ | ✓ | | | ✓ | ✓ | | 16,5 mm ✓ **2.9 VR6** |
| 15 | 49873 | 1H0422803A | ✓ | | ✓ | | | | ✓ | ✓ | | **TRW XTR-USA** ✓ **2.9 VR6** |
| 16 | 49874 | 1H0422804A | ✓ | | | ✓ | | | ✓ | ✓ | | **TRW XTR-USA** ✓ **2.9 VR6** |
| 20 | 95870 | | ✓ | | ✓ | ✓ | | | ✓ | ✓ | | MS ✓ **2.9 VR6** |
| 23 | 49666/7 | | ✓ | | ✓ | | | | ✓ | ✓ | | + **10+14a** ✓ **2.9 VR6** |
| 24 | 49667/7 | | ✓ | | | ✓ | | | ✓ | ✓ | | + **11+14a** ✓ **2.9 VR6** |
| 25 | 51862 | 191411315A | ✓ | | ✓ | ✓ | | | ✓ | ✓ | ✓ | Ø 18 mm |

## VOLKSWAGEN DERBY 09/76→1984

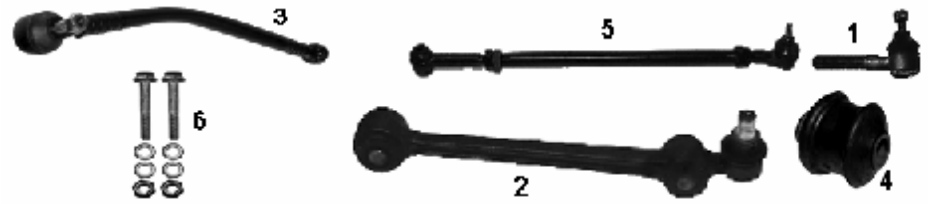


| NR | MAPCO | REF | | | ← | → | ↑ | ↓ | | | NEW | INFO |
|---|---|---|---|---|---|---|---|---|---|---|---|---|
| 1 | 19850 | 811419812 | ✓ | | ✓ | ✓ | | | ✓ | ✓ | | M14x1,5RHT |
| 2 | 19854 | 861407151B | ✓ | | ✓ | ✓ | | | ✓ | ✓ | | 10/78 →84 |
| 3 | 19899 | 871419801A | ✓ | | ✓ | ✓ | | | ✓ | ✓ | | 1977→84 |
| 4 | 33893 | 861407183 | ✓ | | ✓ | | | | ✓ | ✓ | | |
| 5 | 49878 | 871419802 | ✓ | | | ✓ | | | ✓ | ✓ | | 1977→84 |
| 6 | 95854 | | ✓ | | ✓ | ✓ | | | ✓ | ✓ | | MS |

## VOLKSWAGEN FOX (5Z1) 04/05→

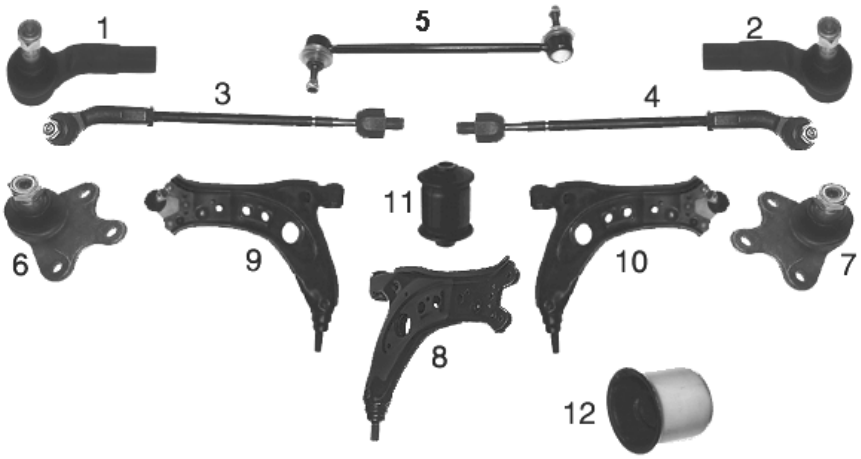


| NR | MAPCO | REF | | | ← | → | ↑ | ↓ | | | NEW | INFO |
|---|---|---|---|---|---|---|---|---|---|---|---|---|
| 1 | 59806 | 6Q0423811 | ✓ | | ✓ | | | | ✓ | ✓ | | |
| 2 | 59807 | 6Q0423812 | ✓ | | | ✓ | | | ✓ | ✓ | | |
| 3 | 59808 | 6Q0423803B | ✓ | | ✓ | | | | ✓ | ✓ | | |
| 4 | 59809 | 6Q0423804B | ✓ | | | ✓ | | | ✓ | ✓ | | |
| 5 | 59812HPS | 6Q0411315C | ✓ | | ✓ | ✓ | | | ✓ | ✓ | | |
| 6 | 59810 | 6Q0407365A | ✓ | | ✓ | | | | ✓ | ✓ | | |
| 7 | 59811 | 6Q0407366A | ✓ | | | ✓ | | | ✓ | ✓ | | |
| 8 | 59813 | 6Q0407151D | ✓ | | ✓ | ✓ | | | ✓ | ✓ | | |
| 9 | 59813/1 | | ✓ | | | ✓ | | | ✓ | ✓ | | 6 + 8 |
| 10 | 59813/2 | | ✓ | | | ✓ | | | ✓ | ✓ | | 7 + 8 |
| 11 | 36938 | 6Q0407182A | ✓ | | ✓ | ✓ | | | ✓ | ✓ | | |
| 12 | 36939 | 6Q0407183 | ✓ | | ✓ | ✓ | | | ✓ | ✓ | | |

| VOLKSWAGEN | GOLF I<br>JETTA I<br>SCIROCCO (53) | 08/74→08/83<br>08/79→08/83<br>02/74→07/80 |
|---|---|---|

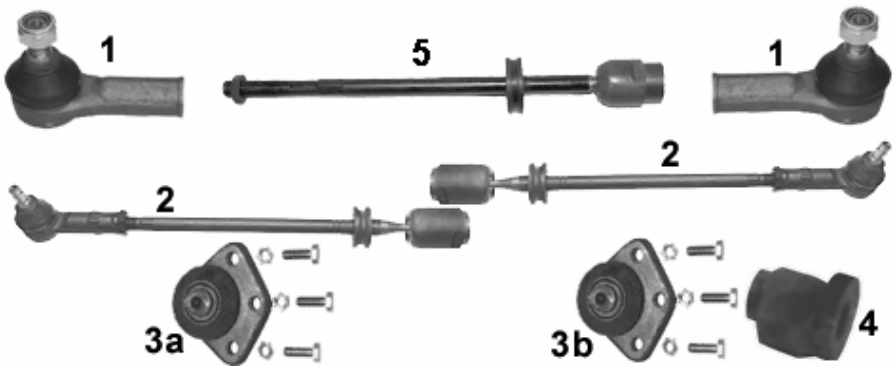


| NR | MAPCO | REF | | | ← | → | ↑ | ↓ | | | NEW | INFO |
|---|---|---|---|---|---|---|---|---|---|---|---|---|
| 1 | **19874** | 171419812 | ✓ | | ✓ | ✓ | | | ✓ | ✓ | | M14x1,5RHT |
| 2 | **19891** | 171419804 | ✓ | | ✓ | ✓ | | | ✓ | ✓ | | |
| 3a | **19875** | 171407365 | ✓ | | ✓ | ✓ | | | ✓ | ✓ | | →10/77 |
| 3b | **19876** | 171407365G | ✓ | | ✓ | ✓ | | | ✓ | ✓ | | 11/77→ |
| 4 | **33820** | 171407181A | ✓ | | ✓ | ✓ | | | ✓ | ✓ | | |
| 5 | **19891/1** | 171419821 | ✓ | | ✓ | ✓ | | | ✓ | ✓ | | |
| | | | | | | | | | | | | |
| | | | | | | | | | | | | |
| | | | | | | | | | | | | |

**VERGLEICHSNUMMERN DIENEN NUR ZUR BESSEREN IDENTIFIKATION UND DÜRFEN NICHT AUF RECHNUNGEN ERSCHEINEN!!!**
**Reference numbers are used for better identification only !**
**Références d´origine pour meilleure identification seulement !**

## VOLKSWAGEN GOLF II
## VOLKSWAGEN JETTA II

**09/83→10/91**

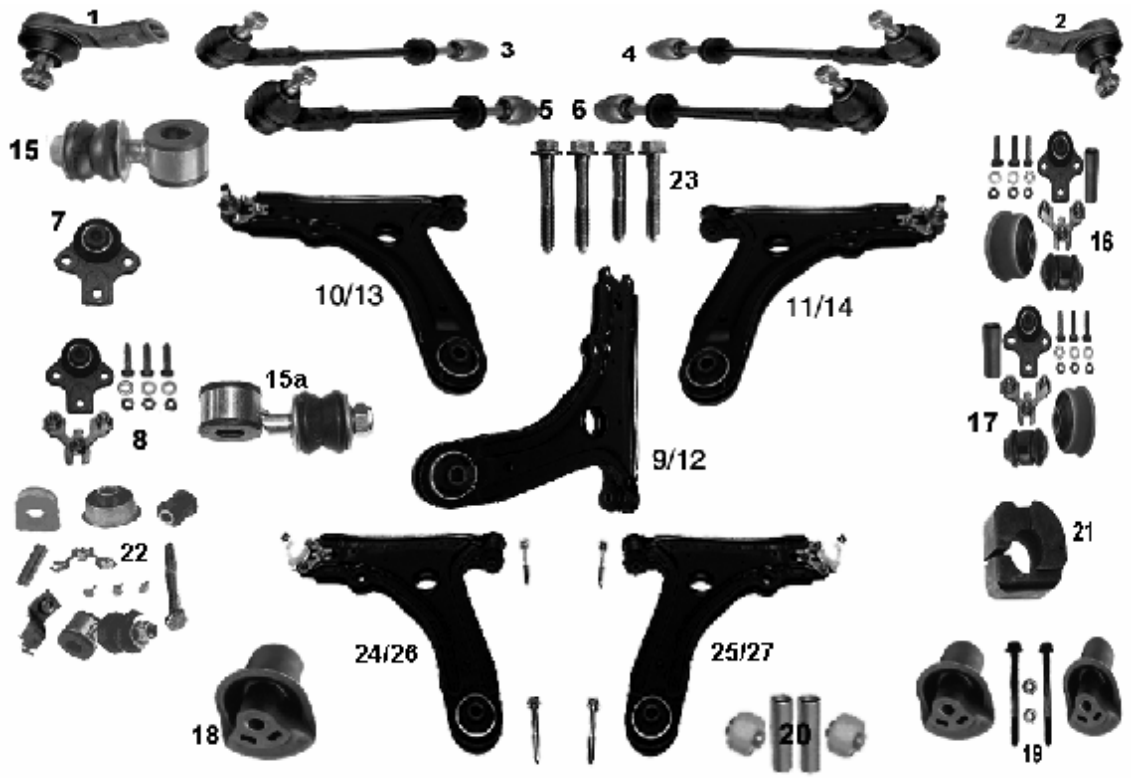


| NR | MAPCO | REF | | | ← | → | ↑ | ↓ | | | NEW | INFO |
|---|---|---|---|---|---|---|---|---|---|---|---|---|
| 1 | **19877** | 191419811 | ✓ | | ✓ | | | | ✓ | ✓ | | M14x1,5RHT |
| 2 | **19878** | 191419812 | ✓ | | | ✓ | | | ✓ | ✓ | | M14x1,5RHT |
| 3 | **19892** | 191419803 | ✓ | | ✓ | | | | | ✓ | | |
| 4 | **19888** | 191419804 | ✓ | | | ✓ | | | | ✓ | | |
| 5 | **19860** | 191422803A | ✓ | | ✓ | | | | ✓ | | | |
| 6 | **19861** | 191422804A | ✓ | | | ✓ | | | ✓ | | | |
| 7 | **19879** | 191407365 | ✓ | | ✓ | ✓ | | | ✓ | ✓ | | →07/87 **Ø 17 mm** |
| 7 | **19889** | 357407365 | ✓ | | ✓ | ✓ | | | ✓ | ✓ | | 08/87→ **Ø 19 mm** |
| 8 | **19879/1** | 191407365 | ✓ | | ✓ | ✓ | | | ✓ | ✓ | | →07/87 **Ø 17 mm** |
| 8 | **19889/1** | 357407365 | ✓ | | ✓ | ✓ | | | ✓ | ✓ | | 08/87→ **Ø 19 mm** |
| 9 | **19855** | 191407153B | ✓ | | ✓ | ✓ | | | ✓ | ✓ | | →07/87 |
| 10 | **19855/1** | | ✓ | | ✓ | | | | ✓ | ✓ | | →07/87 **Ø 17 mm** |
| 11 | **19855/2** | | ✓ | | | ✓ | | | ✓ | ✓ | | →07/87 **Ø 17 mm** |
| 12 | **19858** | 191407153B | ✓ | | ✓ | ✓ | | | ✓ | ✓ | | 08/87→ |
| 13 | **19858/1** | | ✓ | | ✓ | | | | ✓ | ✓ | | 08/87→ **Ø 19 mm** |
| 14 | **19858/2** | | ✓ | | | ✓ | | | ✓ | ✓ | | 08/87→ **Ø 19 mm** |
| 15 | **49850** | 191411315B | ✓ | | ✓ | ✓ | | | ✓ | ✓ | | |
| 15a | **51862** | 191411315A | ✓ | | ✓ | ✓ | | | ✓ | ✓ | ✓ | **Ø 18 mm** |
| 16 | **19279** | | ✓ | | ✓ | ✓ | | | ✓ | ✓ | | →07/87 **Ø 17 mm** Kit |
| 17 | **19289** | | ✓ | | ✓ | ✓ | | | ✓ | ✓ | | 08/87→ **Ø 19 mm** Kit |
| 18 | **33833** | 191501541 | | ✓ | | ✓ | ✓ | | ✓ | ✓ | | |
| 19 | **33833/2** | 191501541S | | ✓ | | ✓ | ✓ | | ✓ | ✓ | | |
| 20 | **33818/2** | | ✓ | | ✓ | ✓ | | | ✓ | ✓ | | **Kit** |
| 21 | **33904** | 191411314 | ✓ | | ✓ | ✓ | | | ✓ | ✓ | | **Ø 17 mm** |
| 22 | **33890** | | ✓ | | ✓ | ✓ | | | ✓ | ✓ | | |
| 23 | **95858** | | ✓ | | ✓ | ✓ | | | ✓ | ✓ | | MS |
| 24 | **19855/7** | | ✓ | | ✓ | | | | ✓ | ✓ | | + →07/87 **Ø 17 mm** |
| 25 | **19855/8** | | ✓ | | | ✓ | | | ✓ | ✓ | | + →07/87 **Ø 17 mm** |
| 26 | **19858/7** | | ✓ | | ✓ | | | | ✓ | ✓ | | + 08/87→ **Ø 19 mm** |
| 27 | **19858/8** | | ✓ | | | ✓ | | | ✓ | ✓ | | + 08/87→ **Ø 19 mm** |

# VOLKSWAGEN GOLF III - JETTA II
# VOLKSWAGEN VENTO

**11/91→1997**

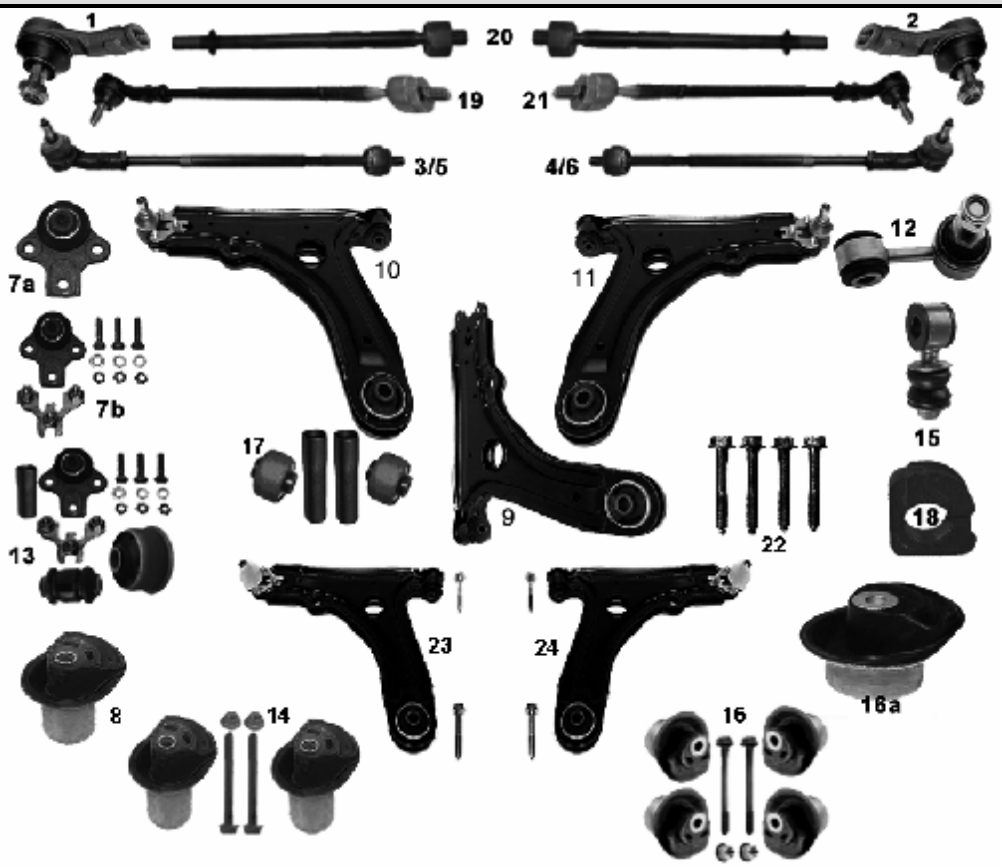


| NR | MAPCO | REF | | | ← | → | ↑ | ↓ | | | NEW | INFO |
|---|---|---|---|---|---|---|---|---|---|---|---|---|
| 1 | 19877 | 191419811 | ✓ | | ✓ | | | | ✓ | ✓ | | M14x1,5RHT |
| 2 | 19878 | 191419812 | ✓ | | | ✓ | | | ✓ | ✓ | | M14x1,5RHT |
| 3 | 19862 | 1H0419803 | ✓ | | ✓ | | | | | ✓ | | |
| 4 | 19863 | 1H0419804 | ✓ | | | ✓ | | | | ✓ | | |
| 5 | 19864 | 1H0422803 | ✓ | | ✓ | | | | ✓ | | | TRW STOP **MOTOR AAA, ABF, ABV, ADY, 2E** |
| 6 | 19865 | 1H0422804 | ✓ | | | ✓ | | | ✓ | | | TRW STOP **MOTOR AAA, ABF, ABV, ADY, 2E** |
| 7A | 19889 | 357407365 | ✓ | | ✓ | ✓ | | | ✓ | ✓ | | **Ø 19 mm** |
| 7B | 19889/1 | 357407365 | ✓ | | ✓ | ✓ | | | ✓ | ✓ | | **Ø 19 mm** |
| 8 | 33858 | 1H0501541A | | ✓ | ✓ | ✓ | | | ✓ | ✓ | | |
| 9 | 19870 | 1H0407151 | ✓ | | ✓ | ✓ | | | ✓ | ✓ | | |
| 10 | 19870/1 | | ✓ | | ✓ | | | | ✓ | ✓ | | **Ø 19 mm** |
| 11 | 19870/2 | | ✓ | | | ✓ | | | ✓ | ✓ | | **Ø 19 mm** |
| 12 | 19853 | 535411315 | ✓ | | ✓ | ✓ | | | ✓ | ✓ | | ✓ 2.0 16V – 2.8 VR6 |
| 13 | 19289 | | ✓ | | ✓ | ✓ | | | ✓ | ✓ | | Kit |
| 14 | 33858/2 | 1H0501541AS | | ✓ | ✓ | ✓ | | | ✓ | ✓ | | |
| 15 | 49850 | | ✓ | | ✓ | ✓ | | | ✓ | ✓ | | STOP 2.0 16V-2.8 VR6 |
| 16 | 33909/4 | 191411315B | | ✓ | ✓ | ✓ | | | ✓ | ✓ | | |
| 16a | 33909 | 1H9501541 | | ✓ | ✓ | ✓ | | | ✓ | ✓ | | |
| 17 | 33818/2 | | ✓ | | ✓ | ✓ | | | ✓ | ✓ | | **Kit** |
| 18 | 33905 | 1H0411314 | ✓ | | ✓ | ✓ | | | ✓ | ✓ | | 19 mm |
| 19 | 49672 | 1H0422803B | ✓ | | ✓ | | | | ✓ | ✓ | | **ZF** |
| 20 | 49672/1 | | ✓ | | ✓ | ✓ | | | ✓ | ✓ | | **ZF** |
| 21 | 49673 | 1H0422804B | ✓ | | | ✓ | | | ✓ | ✓ | | **ZF** |
| 22 | 95870 | | ✓ | | ✓ | ✓ | | | ✓ | ✓ | | MS |
| 23 | 19870/7 | | ✓ | | ✓ | | | | ✓ | ✓ | | **+ Ø 19 mm** |
| 24 | 19870/8 | | ✓ | | | ✓ | | | ✓ | ✓ | | **+ Ø 19 mm** |

| VOLKSWAGEN | GOLF III 2.0, 2.0 Gti 16V,2.8 VR6, 2.9 VR6 Syncro + | 11/91→ 08/97 |
|---|---|---|
| | VENTO 2.0, 2.8 VR6 | 01/92→ 09/98 |

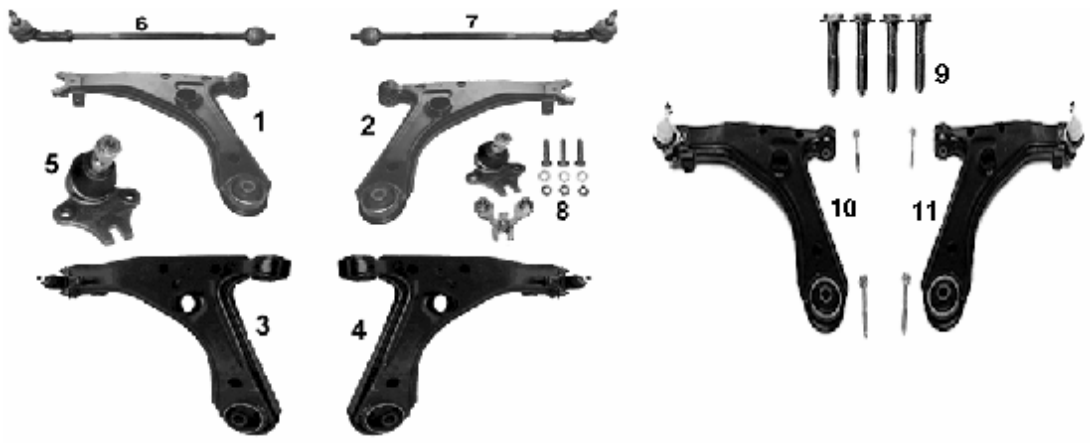


| NR | MAPCO | REF | | | ← | → | ↑ | ↓ | | | NEW | INFO |
|---|---|---|---|---|---|---|---|---|---|---|---|---|
| 1 | 49664 | 1H0407151A | ✓ | | ✓ | | | | ✓ | ✓ | | |
| 2 | 49665 | 1H0407152 | ✓ | | | ✓ | | | ✓ | ✓ | | |
| 3 | 49666 | | ✓ | | ✓ | | | | | ✓ | | |
| 4 | 49667 | | ✓ | | | ✓ | | | | ✓ | | |
| 5 | 19679 | 1H0407365 | ✓ | | ✓ | ✓ | | | ✓ | ✓ | | 16,5 mm |
| 6 | 49873 | 1H0422803A | ✓ | | ✓ | | | | ✓ | ✓ | | TRW XTR-USA |
| 7 | 49874 | 1H0422804A | ✓ | | | ✓ | | | ✓ | ✓ | | TRW XTR-USA |
| 8 | 19679/1 | 1H0407365S | ✓ | | ✓ | ✓ | | | ✓ | ✓ | | 16,5 mm |
| 9 | 95870 | | ✓ | | ✓ | ✓ | | | ✓ | ✓ | | MS |
| 10 | 49666/7 | | ✓ | | ✓ | | | | | ✓ | | + |
| 11 | 49667/7 | | ✓ | | | ✓ | | | | ✓ | | + |

siehe/ see → Golf III

**VERGLEICHSNUMMERN DIENEN NUR ZUR BESSEREN IDENTIFIKATION UND DÜRFEN NICHT AUF RECHNUNGEN ERSCHEINEN!!!**
**Reference numbers are used for better identification only !**
**Références d'origine pour meilleure identification seulement !**

## VOLKSWAGEN GOLF IV + Variant 08/97→

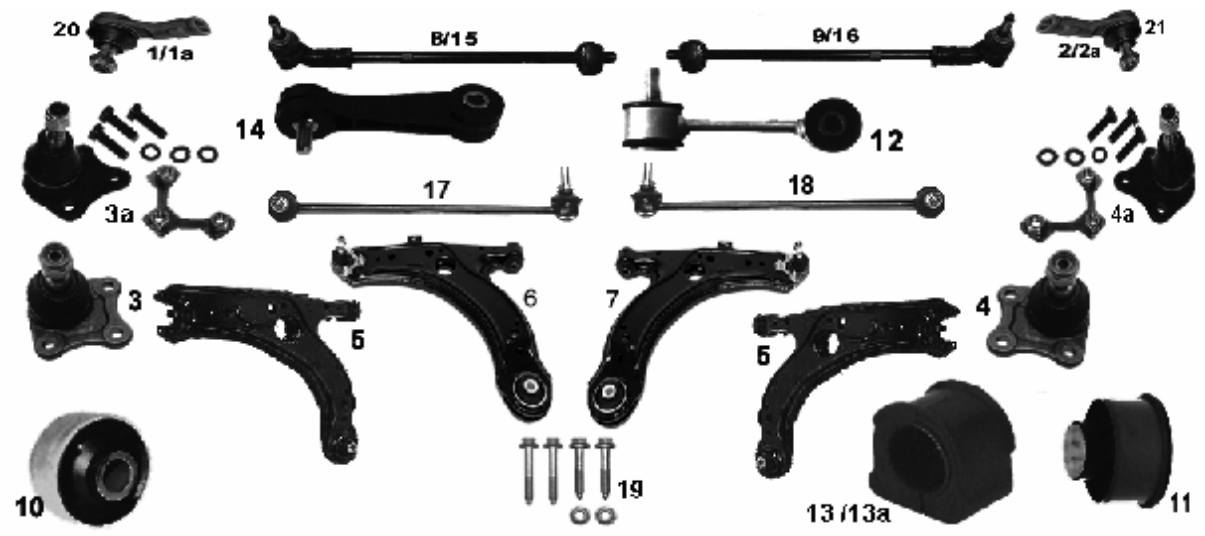


| NR | MAPCO | REF | | | ← | → | ↑ | ↓ | | | NEW | INFO |
|---|---|---|---|---|---|---|---|---|---|---|---|---|
| 1 | 49700 | 1J0 422 811B | ✓ | | ✓ | | | | ✓ | ✓ | | L=94mm M14x1,5RHT, Chassis WP050833→ |
| 1a | 59895 | 1J0 422 811A | ✓ | | ✓ | | | | ✓ | ✓ | | L=75mm M14x1,5RHT, Chassis →WP050832 |
| 2 | 49701 | 1J0 422 812B | ✓ | | | ✓ | | | ✓ | ✓ | | L=94mm M14x1,5RHT, Chassis WP050833→ |
| 2a | 59896 | 1J0 422 812A | ✓ | | | ✓ | | | ✓ | ✓ | | L=75mm M14x1,5RHT, Chassis →WP050832 |
| 3 | 49702 | 1J0 407 365C | ✓ | | ✓ | | | | ✓ | ✓ | | |
| 3a | 49702/1 | 1J0 407 365A | ✓ | | ✓ | | | | ✓ | ✓ | | |
| 4 | 49703 | 1J0 407 366C | ✓ | | | ✓ | | | ✓ | ✓ | | |
| 4a | 49703/1 | 1J0 407 366A | ✓ | | | ✓ | | | ✓ | ✓ | | |
| 5 | 49704 | 1J0 407 151B | ✓ | | ✓ | ✓ | | | ✓ | ✓ | | |
| 6 | 49704/1 | | ✓ | | ✓ | | | | ✓ | ✓ | | **5+3a** |
| 7 | 49704/2 | | ✓ | | | ✓ | | | ✓ | ✓ | | **5+4a** |
| 8 | 49690 | 1J0 422 803B | ✓ | | ✓ | | | | ✓ | ✓ | | Chassis WP050833→ |
| 9 | 49691 | 1J0 422 804B | ✓ | | | ✓ | | | ✓ | ✓ | | Chassis WP050833→ |
| 10 | 33903 | 1J0 407 181 | ✓ | | ✓ | ✓ | | | ✓ | ✓ | | |
| 11 | 33912 | 1J0 501 541C | | ✓ | ✓ | ✓ | | | ✓ | ✓ | | |
| 12 | 49867 | 1J0 411 315C | ✓ | | ✓ | ✓ | | | ✓ | ✓ | | Stahl/steel L=105mm, Ø 23mm |
| 13 | 33927 | 1J0 411 314B | ✓ | | ✓ | ✓ | | | ✓ | ✓ | | Innen/ inner Ø 19mm |
| 13a | 33824 | 1J0 411 314G | ✓ | | ✓ | ✓ | | | ✓ | ✓ | | Innen/ inner Ø 23mm |
| 14 | 49868 | 1J0 411 315C | ✓ | | ✓ | ✓ | | | ✓ | ✓ | | Plastik L= 105mm Ø 21mm |
| 15 | 49869 | 1J0 422 803A | ✓ | | ✓ | | | | ✓ | ✓ | | Chassis→WP050832 |
| 16 | 49870 | 1J0 422 804A | ✓ | | | ✓ | | | ✓ | ✓ | | Chassis→WP050832 |
| 17 | 59852 | 68510 017 | ✓ | | ✓ | | | | ✓ | ✓ | | |
| 18 | 59853 | 68510 018 | ✓ | | | ✓ | | | ✓ | ✓ | | |
| 19 | 95704 | | ✓ | | ✓ | ✓ | | | ✓ | ✓ | | MS |
| 20 | 51711 | 8N0 422 811A | ✓ | | ✓ | | | | ✓ | | | 16x1,5RHT ✓ 3.2 R32 4motion |
| 21 | 51712 | 8N0 422 812A | ✓ | | | ✓ | | | ✓ | | | 16x1,5RHT ✓ 3.2 R32 4motion |

## VOLKSWAGEN GOLF V (1K1) 10/03→

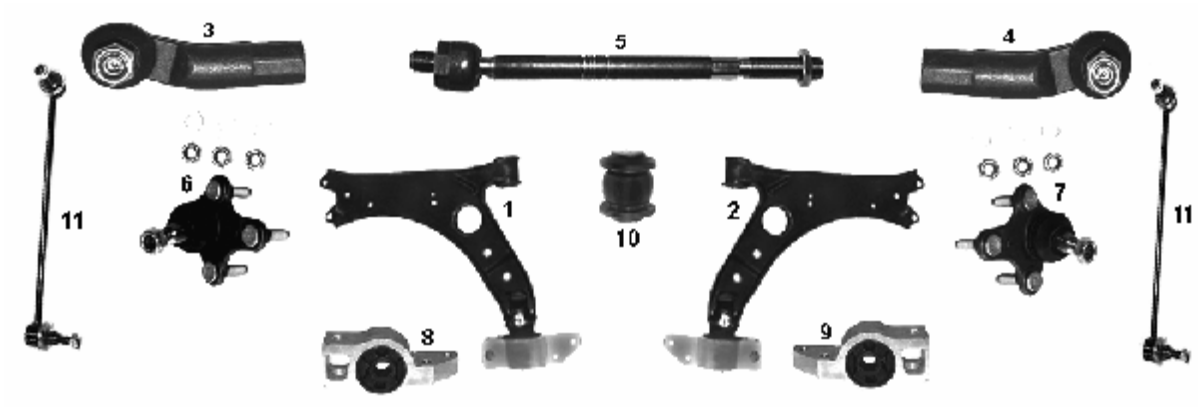


| NR | MAPCO | REF | | | ← | → | ↑ | ↓ | | | NEW | INFO |
|---|---|---|---|---|---|---|---|---|---|---|---|---|
| 1 | 51715 | 1K0 407 151P | ✓ | | ✓ | | | ✓ | ✓ | ✓ | | |
| 2 | 51716 | 1K0 407 152P | ✓ | | | ✓ | | ✓ | ✓ | ✓ | | |
| 3 | 51826 | 1K0 423 811A | ✓ | | ✓ | | | | ✓ | ✓ | | |
| 4 | 51827 | 1K0 423 812A | ✓ | | | ✓ | | | ✓ | ✓ | | |
| 5 | 51723 | 1K0 423 810A | ✓ | | ✓ | ✓ | | | ✓ | ✓ | | M16x1,5RHT L=310 mm |
| 6 | 51724 | 1K0 407 365E | ✓ | | ✓ | | | ✓ | ✓ | ✓ | | Konus 16,00 mm |
| 7 | 51725 | 1K0 407 366E | ✓ | | | ✓ | | ✓ | ✓ | ✓ | | Konus 16,00 mm |
| 8 | 36948 | 1K0 199 231G | ✓ | | ✓ | | | ✓ | ✓ | ✓ | ✓ | |
| 9 | 36949 | 1K0 199 232G | ✓ | | | ✓ | | ✓ | ✓ | ✓ | ✓ | |
| 10 | 36950 | 1K0 407 182 | ✓ | | ✓ | ✓ | | ✓ | ✓ | ✓ | ✓ | |
| 11 | 51825HPS | 1K0 411 315D | ✓ | | ✓ | ✓ | | ✓ | ✓ | ✓ | ✓ | |

## VOLKSWAGEN GOLF V PLUS (1KP) 01/05→

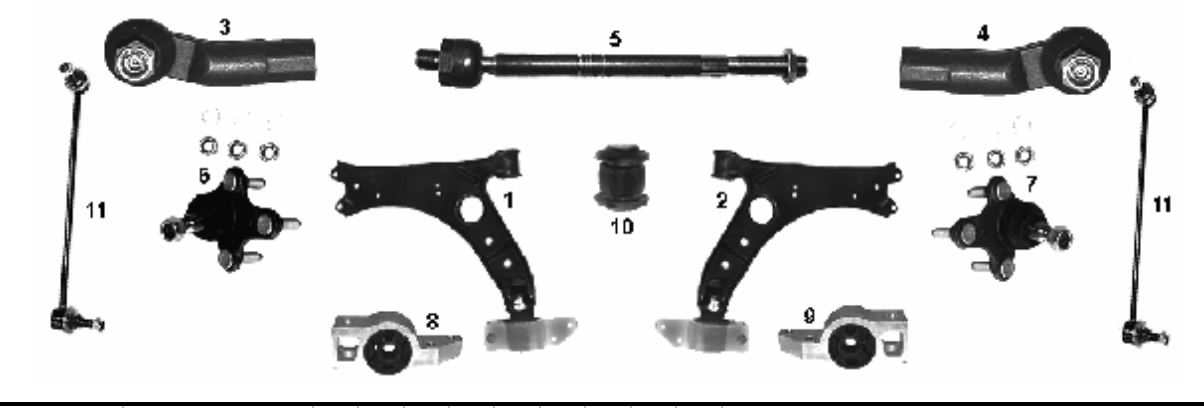


| NR | MAPCO | REF | | | ← | → | ↑ | ↓ | | | NEW | INFO |
|---|---|---|---|---|---|---|---|---|---|---|---|---|
| 1 | 51715 | 1K0 407 151P | ✓ | | ✓ | | | ✓ | ✓ | ✓ | | |
| 2 | 51716 | 1K0 407 152P | ✓ | | | ✓ | | ✓ | ✓ | ✓ | | |
| 3 | 51826 | 1K0 423 811A | ✓ | | ✓ | | | | ✓ | ✓ | | |
| 4 | 51827 | 1K0 423 812A | ✓ | | | ✓ | | | ✓ | ✓ | | |
| 5 | 51723 | 1K0 423 810A | ✓ | | ✓ | ✓ | | | ✓ | ✓ | | M16x1,5RHT L=310 mm |
| 6 | 51724 | 1K0 407 365E | ✓ | | ✓ | | | ✓ | ✓ | ✓ | | Konus 16,00 mm |
| 7 | 51725 | 1K0 407 366E | ✓ | | | ✓ | | ✓ | ✓ | ✓ | | Konus 16,00 mm |
| 8 | 36948 | 1K0 199 231G | ✓ | | ✓ | | | ✓ | ✓ | ✓ | ✓ | |
| 9 | 36949 | 1K0 199 232G | ✓ | | | ✓ | | ✓ | ✓ | ✓ | ✓ | |
| 10 | 36950 | 1K0 407 182 | ✓ | | ✓ | ✓ | | ✓ | ✓ | ✓ | ✓ | |
| 11 | 51825HPS | 1K0 411 315D | ✓ | | ✓ | ✓ | | ✓ | ✓ | ✓ | ✓ | |

## Volkswagen JETTA III (1KM) 08/05→

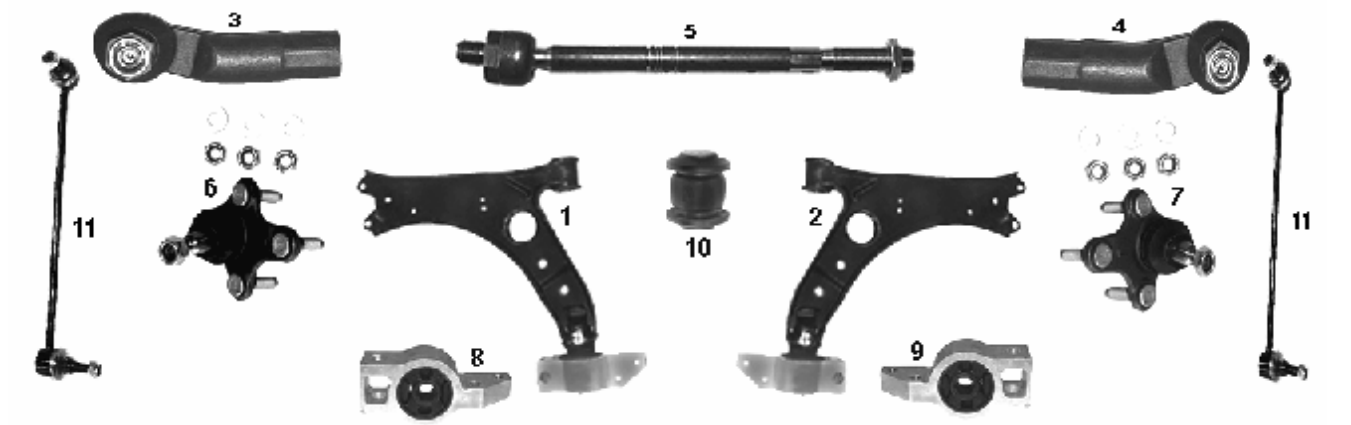


| NR | MAPCO | REF | | | ← | → | ↑ | ↓ | | | NEW | INFO |
|---|---|---|---|---|---|---|---|---|---|---|---|---|
| 1 | 51715 | 1K0 407 151P | ✓ | | ✓ | | | ✓ | ✓ | ✓ | | |
| 2 | 51716 | 1K0 407 152P | ✓ | | | ✓ | | ✓ | ✓ | ✓ | | |
| 3 | 51826 | 1K0 423 811A | ✓ | | ✓ | | | | ✓ | ✓ | | |
| 4 | 51827 | 1K0 423 812A | ✓ | | | ✓ | | | ✓ | ✓ | | |
| 5 | 51723 | 1K0 423 810A | ✓ | | ✓ | ✓ | | | ✓ | ✓ | | M16x1,5RHT L=310 mm |
| 6 | 51724 | 1K0 407 365E | ✓ | | ✓ | | | ✓ | ✓ | ✓ | | Konus 16,00 mm |
| 7 | 51725 | 1K0 407 366E | ✓ | | | ✓ | | ✓ | ✓ | ✓ | | Konus 16,00 mm |
| 8 | 36948 | 1K0 199 231G | ✓ | | ✓ | | | ✓ | ✓ | ✓ | ✓ | |
| 9 | 36949 | 1K0 199 232G | ✓ | | | ✓ | | ✓ | ✓ | ✓ | ✓ | |
| 10 | 36950 | 1K0 407 182 | ✓ | | ✓ | ✓ | | ✓ | ✓ | ✓ | ✓ | |
| 11 | 51825HPS | 1K0 411 315D | ✓ | | ✓ | ✓ | | ✓ | ✓ | ✓ | ✓ | |

## VOLKSWAGEN KAEFER 01/60→12/85

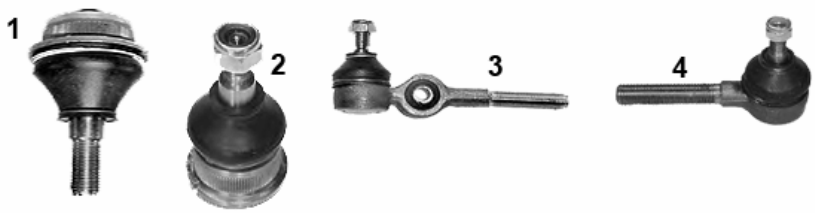


| NR | MAPCO | REF | | | ← | → | ↑ | ↓ | | | NEW | INFO |
|---|---|---|---|---|---|---|---|---|---|---|---|---|
| 1 | 51800 | 131405361E | ✓ | | ✓ | ✓ | ✓ | | ✓ | ✓ | | Ø 16 mm |
| 2 | 51801 | 131405371G | ✓ | | ✓ | ✓ | | ✓ | ✓ | ✓ | | Ø 15 mm |
| 3 | 51807 | 131415813D | ✓ | | | ✓ | | | ✓ | ✓ | | innen/inner M14x1,5 LHT |
| 4 | 51810 | 113415821 | ✓ | | ✓ | ✓ | | | ✓ | ✓ | | innen/inner M14x1,5RHT |

## VOLKSWAGEN LUPO

09/98→

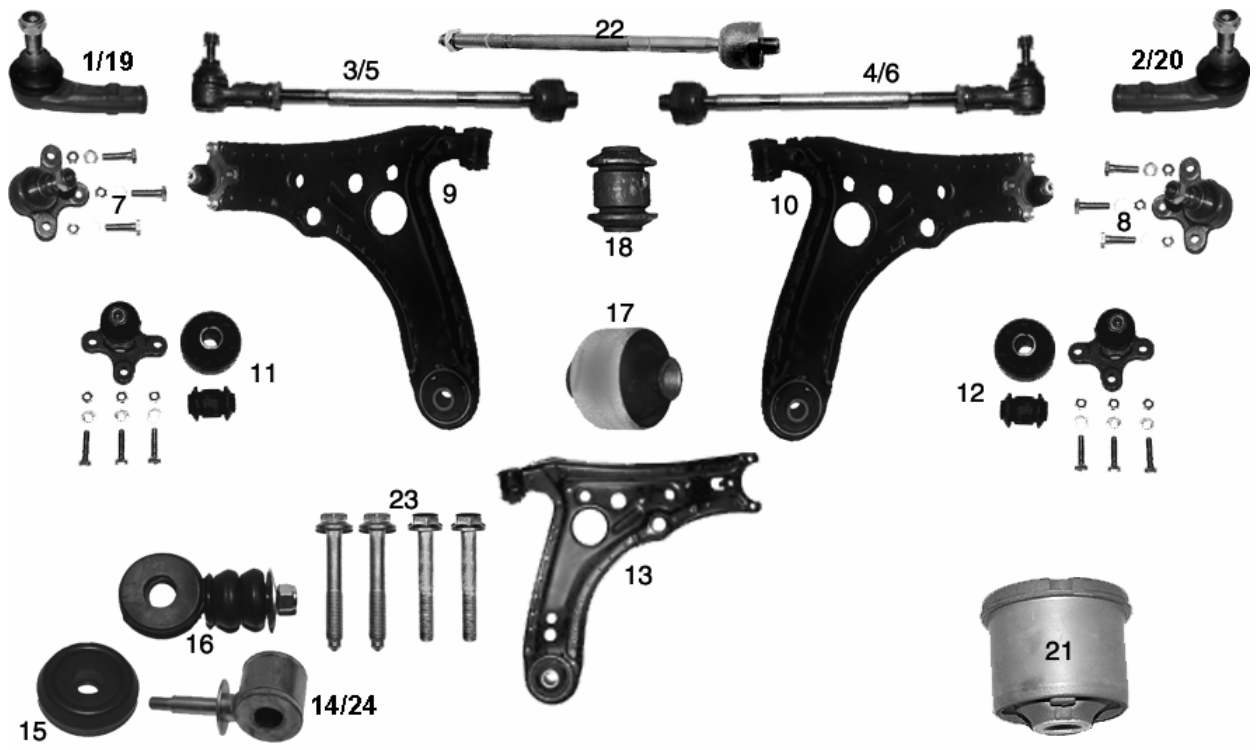


| NR | MAPCO | REF | | | ← | → | ↑ | ↓ | | | NEW | INFO |
|---|---|---|---|---|---|---|---|---|---|---|---|---|
| 1 | 19885 | 6N0419811 | ✓ | | ✓ | | | | | ✓ | | M14 x 1,5 RHT |
| 2 | 19886 | 6N0419812 | ✓ | | | ✓ | | | | ✓ | | M14 x 1,5 RHT |
| 3 | 19688 | 6N0419803 | ✓ | | ✓ | | | | | ✓ | | |
| 4 | 19689 | 6N0419804 | ✓ | | | ✓ | | | | ✓ | | |
| 5 | 59890 | 6X0422803A | ✓ | | ✓ | | | | ✓ | | | |
| 6 | 59889 | 6X0422804A | ✓ | | | ✓ | | | ✓ | | | |
| 7 | 19895 | 6N0407365 | ✓ | | ✓ | | | | ✓ | ✓ | | |
| 8 | 19896 | 6N0407365A | ✓ | | | ✓ | | | ✓ | ✓ | | |
| 9 | 51819 | 6X0407151A | ✓ | | ✓ | | | | ✓ | ✓ | | **7+13** |
| 10 | 51820 | 6X0407151A | ✓ | | | ✓ | | | ✓ | ✓ | | **8+13** |
| 11 | 19295 | | ✓ | | ✓ | | | | ✓ | ✓ | | Kit |
| 12 | 19296 | | ✓ | | | ✓ | | | ✓ | ✓ | | Kit |
| 13 | 51819/1 | 6X0 407151A | ✓ | | ✓ | ✓ | | | ✓ | ✓ | | |
| 14 | 49862 | 6N0411315 | ✓ | | ✓ | ✓ | | | ✓ | ✓ | | |
| 15 | 49862/9 | 6N0411329 | ✓ | | ✓ | ✓ | | | ✓ | ✓ | | |
| 16 | 49862/1 | | ✓ | | ✓ | ✓ | | | ✓ | ✓ | | **14 + 15** |
| 17 | 33835 | 6N0407181 | ✓ | | ✓ | ✓ | | | ✓ | ✓ | | |
| 18 | 33834 | 6N0407182 | ✓ | | ✓ | ✓ | | | ✓ | ✓ | | |
| 19 | 51822 | 6X0422811 | ✓ | | ✓ | | | | ✓ | | | M14x1,5 RHT |
| 20 | 51823 | 6X0422812 | ✓ | | | ✓ | | | ✓ | | | M14x1,5 RHT |
| 21 | 33937 | 6N0501541D | | ✓ | ✓ | ✓ | | | ✓ | ✓ | | |
| 22 | 19696/1 | **6N0 422 821A** | ✓ | | ✓ | ✓ | | | ✓ | | | |
| 23 | 95686 | | ✓ | | ✓ | ✓ | | | ✓ | ✓ | | MS |
| 24 | 51821 | 6N0411315A | ✓ | | ✓ | ✓ | | | ✓ | ✓ | | 1.4 16V 09/98-> , Ø Innen/ inner 20,0mm |

## VOLKSWAGEN NEW BEETLE 01/98→

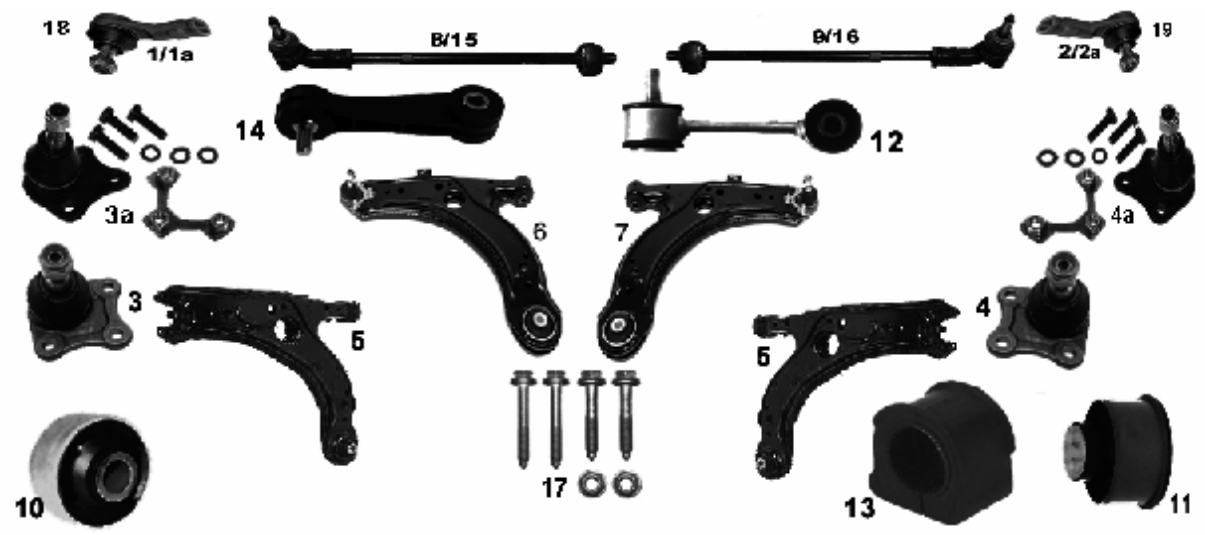


| NR | MAPCO | REF | | | ← | → | ↑ | ↓ | | | NEW | INFO |
|---|---|---|---|---|---|---|---|---|---|---|---|---|
| 1 | 49700 | 1J0 422 811B | ✓ | | ✓ | | | | ✓ | ✓ | | L=94mm M14x1,5RHT, Chassis WP050833→ |
| 1a | 59895 | 1J0 422 811A | ✓ | | ✓ | | | | ✓ | ✓ | | L=75mm M14x1,5RHT, Chassis →WP050832 |
| 2 | 49701 | 1J0 422 812B | ✓ | | | ✓ | | | ✓ | ✓ | | L=94mm M14x1,5RHT, Chassis WP050833→ |
| 2a | 59896 | 1J0 422 812A | ✓ | | | ✓ | | | ✓ | ✓ | | L=75mm M14x1,5RHT, Chassis →WP050832 |
| 3 | 49702 | 1J0 407 365C | ✓ | | ✓ | | | | ✓ | ✓ | | |
| 3a | 49702/1 | 1J0 407 365A | ✓ | | ✓ | | | | ✓ | ✓ | | |
| 4 | 49703 | 1J0 407 366C | ✓ | | | ✓ | | | ✓ | ✓ | | |
| 4a | 49703/1 | 1J0 407 366A | ✓ | | | ✓ | | | ✓ | ✓ | | |
| 5 | 49704 | 1J0 407 151B | ✓ | | ✓ | ✓ | | | ✓ | ✓ | | |
| 6 | 49704/1 | | ✓ | | ✓ | | | | ✓ | ✓ | | **5+3a** |
| 7 | 49704/2 | | ✓ | | | ✓ | | | ✓ | ✓ | | **5+4a** |
| 8 | 49690 | 1J0 422 803B | ✓ | | ✓ | | | | ✓ | ✓ | | Chassis WP050833→ |
| 9 | 49691 | 1J0 422 804B | ✓ | | | ✓ | | | ✓ | ✓ | | Chassis WP050833→ |
| 10 | 33903 | 1J0 407 181 | ✓ | | ✓ | ✓ | | | ✓ | ✓ | | |
| 11 | 33912 | 1J0 501 541C | | ✓ | ✓ | ✓ | | | ✓ | ✓ | | |
| 12 | 49867 | 1J0 411 315C | ✓ | | ✓ | ✓ | | | ✓ | ✓ | | Stahl/steel L=105mm, Ø 23mm |
| 13 | 33927 | 1J0 411 314B | ✓ | | ✓ | ✓ | | | ✓ | ✓ | | Innen Ø 19mm |
| 14 | 49868 | 1J0 411 315C | ✓ | | ✓ | ✓ | | | ✓ | ✓ | | Plastik L= 105mm Ø 21mm |
| 15 | 49869 | 1J0 422 803A | ✓ | | ✓ | | | | ✓ | ✓ | | Chassis→WP050832 |
| 16 | 49870 | 1J0 422 804A | ✓ | | | ✓ | | | ✓ | ✓ | | Chassis→WP050832 |
| 17 | 95704 | | ✓ | | ✓ | ✓ | | | ✓ | ✓ | | MS |
| 18 | 51711 | 8N0 422 811A | ✓ | | ✓ | | | | ✓ | | ✓ | 16x1,5RHT ✓ RSI 3.2 |
| 19 | 51712 | 8N0 422 812A | ✓ | | | ✓ | | | ✓ | | ✓ | 16x1,5RHT ✓ RSI 3.2 |

## VOLKSWAGEN PASSAT - SANTANA - DASHER (USA) 05/73→07/81

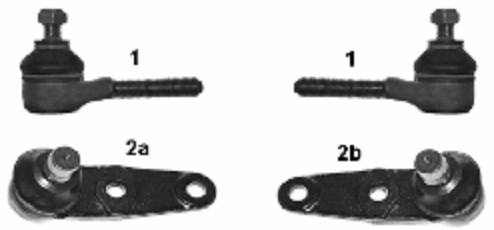


| NR | MAPCO | REF | | | ← | → | ↑ | ↓ | | | NEW | INFO |
|---|---|---|---|---|---|---|---|---|---|---|---|---|
| 1 | 19850 | 811419812 | ✓ | | ✓ | ✓ | | | ✓ | ✓ | | M14x1,5RHT |
| 2a | 19856 | 823407365A | ✓ | | ✓ | ✓ | | | ✓ | ✓ | | →08/77 |
| 2b | 19857 | 823407365E | ✓ | | ✓ | ✓ | | | ✓ | ✓ | | 09/77→ |

## VOLKSWAGEN PASSAT - SANTANA 08/81→03/88
## VOLKSWAGEN PASSAT SYNCRO (4WD) 08/84→03/88

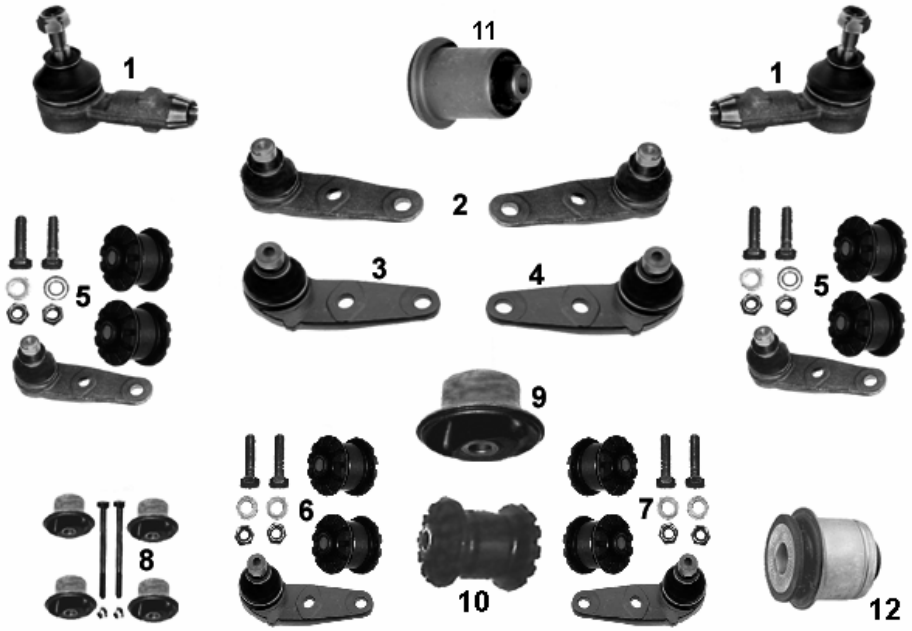


| NR | MAPCO | REF | | | ← | → | ↑ | ↓ | | | NEW | INFO |
|---|---|---|---|---|---|---|---|---|---|---|---|---|
| 1 | 19890 | 811419812A | ✓ | | ✓ | | | | ✓ | ✓ | | M14x1,5RHT |
| 2 | 19857 | 823407365E | ✓ | | ✓ | ✓ | | | | ✓ | | |
| 3 | 19893 | 855407365A | ✓ | | ✓ | | | | ✓ | | | |
| 4 | 19894 | 855407366A | ✓ | | | ✓ | | | ✓ | | | |
| 5 | 19257 | | ✓ | | ✓ | ✓ | | | | ✓ | | Kit |
| 6 | 19293 | | ✓ | | ✓ | | | | ✓ | | | Kit |
| 7 | 19294 | | ✓ | | | ✓ | | | ✓ | | | Kit |
| 8 | 33826/4 | | | ✓ | ✓ | ✓ | | | ✓ | ✓ | | |
| 9 | 33826 | 321501541 | | ✓ | ✓ | ✓ | | | ✓ | ✓ | | |
| 10 | 33828 | 811407181A | ✓ | | ✓ | ✓ | | | ✓ | ✓ | | |
| 11 | 33813 | 857407181 | ✓ | | ✓ | ✓ | | ✓ | ✓ | ✓ | | |
| 12 | 33827 | 893199419 | ✓ | | ✓ | ✓ | | | ✓ | ✓ | | |

## VOLKSWAGEN PASSAT (_,35I) - PASSAT SYNCRO (4WD) 04/88→05/97

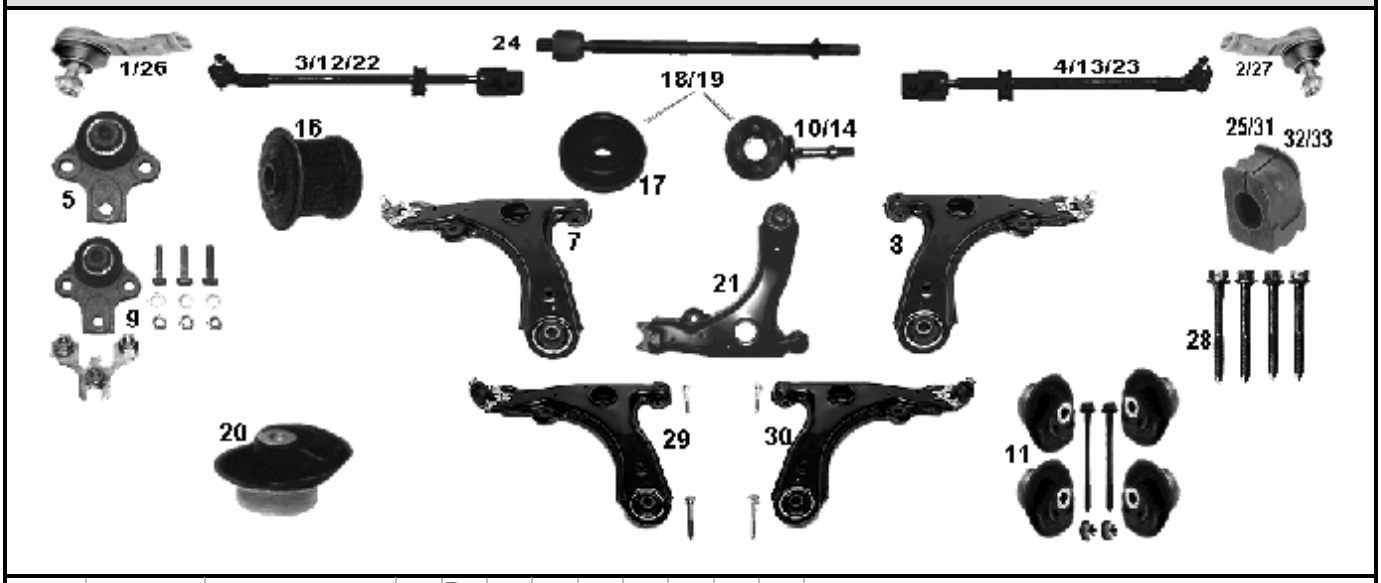


| NR | MAPCO | REF | | | ← | → | ↑ | ↓ | | | NEW | INFO |
|---|---|---|---|---|---|---|---|---|---|---|---|---|
| 1 | **19877** | 191419811 | ✓ | | ✓ | | | | ✓ | ✓ | | M14x1,5RHT |
| 2 | **19878** | 191419812 | ✓ | | | ✓ | | | ✓ | ✓ | | M14x1,5RHT |
| 3 | **19871** | 357419803 | ✓ | | ✓ | | | | | ✓ | | |
| 3 | **19682** | 357422803 | ✓ | | ✓ | | | | ✓ | | | **TRW** Chassis →3AR099264 |
| 4 | **19872** | 357419804 | ✓ | | | ✓ | | | | ✓ | | |
| 4 | **19683** | 357422804 | ✓ | | | ✓ | | | ✓ | | | **TRW** Chassis →3AR099264 |
| 5 | **19889** | 357407365 | ✓ | | ✓ | ✓ | | | ✓ | ✓ | | Chassis → 31N255989 |
| 7 | **19690** | 357407151 | ✓ | | ✓ | | | | ✓ | ✓ | | Chassis → 31N255989 |
| 8 | **19691** | 357407151 | ✓ | | | ✓ | | | ✓ | ✓ | | Chassis → 31N255989 |
| 9 | **19889/1** | 357407365 | ✓ | | ✓ | ✓ | | | ✓ | ✓ | | **Ø 19 mm** Chassis → 31N255989 |
| 10 | **49860** | 357411315D | ✓ | | ✓ | ✓ | | | ✓ | ✓ | | **D=21mm** 08/93→1997 |
| 11 | **33871/4** | 3A0501541S | | ✓ | ✓ | ✓ | | | ✓ | ✓ | | STOP **synchro** |
| 12 | **49692** | 3A0422803C | ✓ | | ✓ | | | | ✓ | ✓ | | Chassis 3AR099265 → |
| 13 | **49693** | 3A0422804C | ✓ | | | ✓ | | | ✓ | ✓ | | Chassis 3AR099265 → |
| 14 | **49865** | 357411315C | ✓ | | ✓ | ✓ | | | ✓ | ✓ | | **Ø 19mm** 1988→7/93 |
| | | | | | | | | | | | | |
| 16 | **33830** | 893199415 | ✓ | | ✓ | ✓ | | | ✓ | ✓ | | |
| 17 | **49860/9** | 357411329 | ✓ | | ✓ | ✓ | | | ✓ | ✓ | | |
| 18 | **49860/1** | 357411315D | ✓ | | ✓ | ✓ | | | ✓ | ✓ | | **10 + 17** |
| 19 | **49865/1** | | ✓ | | ✓ | ✓ | | | ✓ | ✓ | | **14 + 17** |
| 20 | **33871** | 3A0501541 | | ✓ | ✓ | ✓ | | | ✓ | ✓ | | STOP **synchro** |
| 21 | **19690/1** | 357407151 | ✓ | | ✓ | ✓ | | | ✓ | ✓ | | Chassis → 31N255989 |
| 22 | **49674** | 357422803A | ✓ | | ✓ | | | | ✓ | ✓ | | **ZF** |
| 23 | **49675** | 357422804A | ✓ | | | ✓ | | | ✓ | ✓ | | **ZF** |
| 24 | **49674/1** | | ✓ | | ✓ | ✓ | | | ✓ | ✓ | | **ZF** |
| 25 | **33935** | 357411313 | ✓ | | ✓ | | | | ✓ | ✓ | | **Ø 21mm** innen/inner |
| 26 | **59816** | 3A0422811A | ✓ | | ✓ | | | | ✓ | ✓ | | Chassis 3A-R-099-265→ |
| 27 | **59817** | 3A0422812A | ✓ | | | ✓ | | | ✓ | ✓ | | Chassis 3A-R-099-265→ |
| 28 | **95870** | | ✓ | | ✓ | ✓ | | | ✓ | ✓ | | MS |
| 29 | **19690/7** | 357407151 | ✓ | | ✓ | | | | ✓ | ✓ | | **+** Chassis → 31N255989 |
| 30 | **19691/7** | 357407151 | ✓ | | | ✓ | | | ✓ | ✓ | | **+** Chassis → 31N255989 |
| 31 | **36914** | 357411314A | ✓ | | | ✓ | | | ✓ | ✓ | ✓ | **Ø 22,7mm** innen/inner |
| 32 | **33948** | 357411314 | ✓ | | | ✓ | | | ✓ | ✓ | ✓ | **Ø 21mm** innen/inner |
| 33 | **33949** | 357411313A | ✓ | | ✓ | | | | ✓ | ✓ | ✓ | **Ø 22,7mm** innen/inner |

## VOLKSWAGEN PASSAT + SYNCRO 08/96→

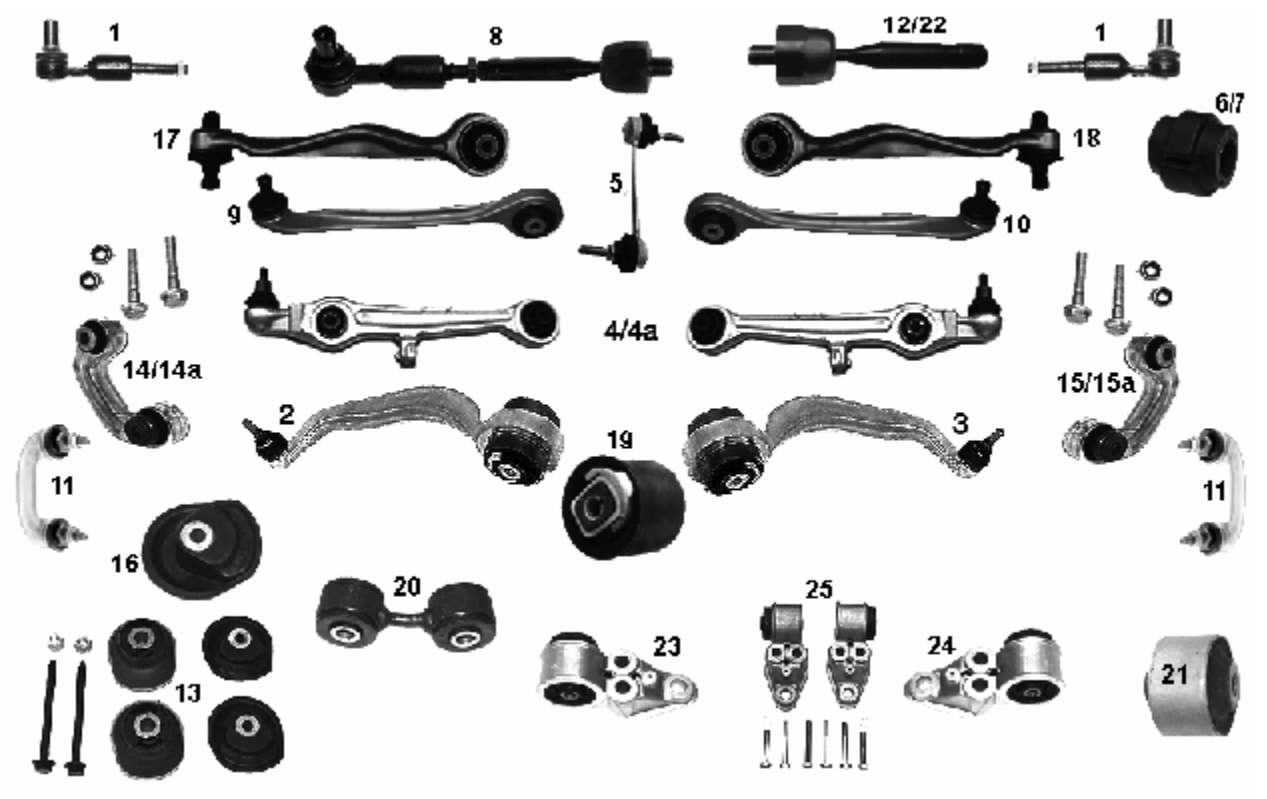


| NR | MAPCO | REF | | | ← | → | ↑ | ↓ | | | NEW | INFO |
|---|---|---|---|---|---|---|---|---|---|---|---|---|
| 1 | 49707 | 4D0419811B | ✓ | | ✓ | ✓ | | | ✓ | ✓ | | |
| 2 | 49708 | 4D0407693N | ✓ | | ✓ | | | ✓ | ✓ | ✓ | | hinten/ rear/ arrière |
| 3 | 49709 | 4D0407694N | ✓ | | | ✓ | | ✓ | ✓ | ✓ | | hinten/ rear/ arrière |
| 4 | 49710 | 4D0407151P | ✓ | | ✓ | ✓ | | | ✓ | ✓ | | →2001 |
| 4A | 51710 | 4B3407155A | ✓ | | ✓ | ✓ | | | ✓ | ✓ | | 2001→2005 |
| 5 | 49714 | 4D0505465D | ✓ | | ✓ | ✓ | | | ✓ | ✓ | | |
| 6 | 33939 | 4D0411327E | ✓ | | ✓ | ✓ | | | ✓ | ✓ | | |
| 7 | 33940 | 4D0411327F | ✓ | | ✓ | ✓ | | | ✓ | ✓ | | ✓ |
| 8 | 49732 | 4D0419801B | ✓ | | ✓ | ✓ | | | ✓ | ✓ | | |
| 9 | 49680 | 8D0407505F | ✓ | | ✓ | | ✓ | | ✓ | ✓ | | |
| 10 | 49681 | 8D0407506F | ✓ | | | ✓ | ✓ | | ✓ | ✓ | | |
| 11 | 49682 | 4D0411317J | ✓ | | ✓ | ✓ | | | ✓ | ✓ | | |
| 12 | 49738 | 4D0422821A | ✓ | | ✓ | ✓ | | | ✓ | ✓ | | |
| 13 | 33871/4 | 3A0501541S | | ✓ | ✓ | ✓ | | | ✓ | ✓ | | |
| 14 | 49683 | 8D0411317D | ✓ | | ✓ | | | ✓ | ✓ | ✓ | | |
| 14a | 49683/1 | | ✓ | | ✓ | | | ✓ | ✓ | ✓ | | + |
| 15 | 49684 | 8D0411318D | ✓ | | | ✓ | | ✓ | ✓ | ✓ | | |
| 15a | 49684/1 | | ✓ | | | ✓ | | ✓ | ✓ | ✓ | | + |
| 16 | 33871 | 3A0501541 | | ✓ | ✓ | ✓ | | | ✓ | ✓ | | |
| 17 | 49791 | 4D0407509G | ✓ | | ✓ | | | | ✓ | ✓ | | hinten/ rear/ arrière |
| 18 | 49792 | 4D0407510G | ✓ | | | ✓ | | | ✓ | ✓ | | hinten/ rear/ arrière |
| 19 | 33932 | 4D0407183P | ✓ | | ✓ | ✓ | | | ✓ | ✓ | | innen/inner |
| 20 | 59820 | 8E0505465C | | ✓ | ✓ | ✓ | | | ✓ | ✓ | | ✓ synchro/ 4-motion |
| 21 | 36915 | 4B0407515 | ✓ | | ✓ | ✓ | ✓ | | ✓ | ✓ | | vorn/ front/ avant |
| 22 | 51707 | 8E0422801B | ✓ | | ✓ | ✓ | | | ✓ | ✓ | | M14x1,5 |
| 23 | 36775 | 4B0 501 521D | | ✓ | ✓ | | | | ✓ | ✓ | ✓ | |
| 24 | 36776 | 4B0 501 522D | | ✓ | | ✓ | | | ✓ | ✓ | ✓ | |
| 25 | 36782 | | | ✓ | ✓ | ✓ | | | ✓ | ✓ | ✓ | |

## VOLKSWAGEN PASSAT + SYNCRO — Fortsetzung/ continued — 08/96→

26

26a
29

26b
30

27

27a
31

28

| NR | MAPCO | REF | | | ← | → | ↑ | ↓ | | | NEW | INFO |
|---|---|---|---|---|---|---|---|---|---|---|---|---|
| 26 | 59818 | 4D0498998C | ✓ | | ✓ | ✓ | | | ✓ | ✓ | | |
| 26a | 59818/1HPS | 4D0498998C | ✓ | | ✓ | ✓ | | | ✓ | ✓ | | →2001 + MS |
| 26b | 59818/2 | 4D0498998C | ✓ | | ✓ | ✓ | | | ✓ | ✓ | | →2001 + MS |
| 27 | 59819 | 8D0498998 | ✓ | | ✓ | ✓ | | | ✓ | ✓ | | |
| 27a | 59819/1 | 8D0498998 | ✓ | | ✓ | ✓ | | | ✓ | ✓ | | →2001 + MS |
| 28 | 95710 | | ✓ | | ✓ | ✓ | | | ✓ | ✓ | | MS |
| 29 | 59824/1 | | ✓ | | ✓ | ✓ | | | ✓ | ✓ | ✓ | 2001→2005 + MS |
| 30 | 59824/2 | | ✓ | | ✓ | ✓ | | | ✓ | ✓ | ✓ | 2001→2005 + MS |
| 31 | 59825/1 | | ✓ | | ✓ | ✓ | | | ✓ | ✓ | ✓ | 2001→2005 + MS |

## VOLKSWAGEN POLO II — 03/75→09/94

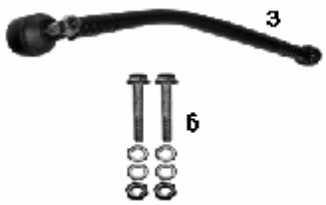


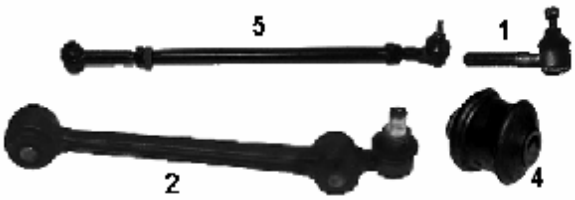


| NR | MAPCO | REF | | | ← | → | ↑ | ↓ | | | NEW | INFO |
|---|---|---|---|---|---|---|---|---|---|---|---|---|
| 1 | 19850 | 811419812 | ✓ | | ✓ | ✓ | | | ✓ | ✓ | | M14x1,5RHT |
| 2 | 19854 | 861407151B | ✓ | | ✓ | ✓ | | | ✓ | ✓ | | 10/78 →84 |
| 3 | 19899 | 871419801A | ✓ | | ✓ | ✓ | | | ✓ | ✓ | | 1987→09/94 |
| 4 | 33893 | 861407183 | ✓ | | ✓ | | | | ✓ | ✓ | | |
| 5 | 49878 | 871419802 | ✓ | | | ✓ | | | ✓ | ✓ | | 1987→09/94 |
| 6 | 95854 | | ✓ | | ✓ | ✓ | | | ✓ | ✓ | | MS |

## VOLKSWAGEN POLO III

10/94→ 09/01

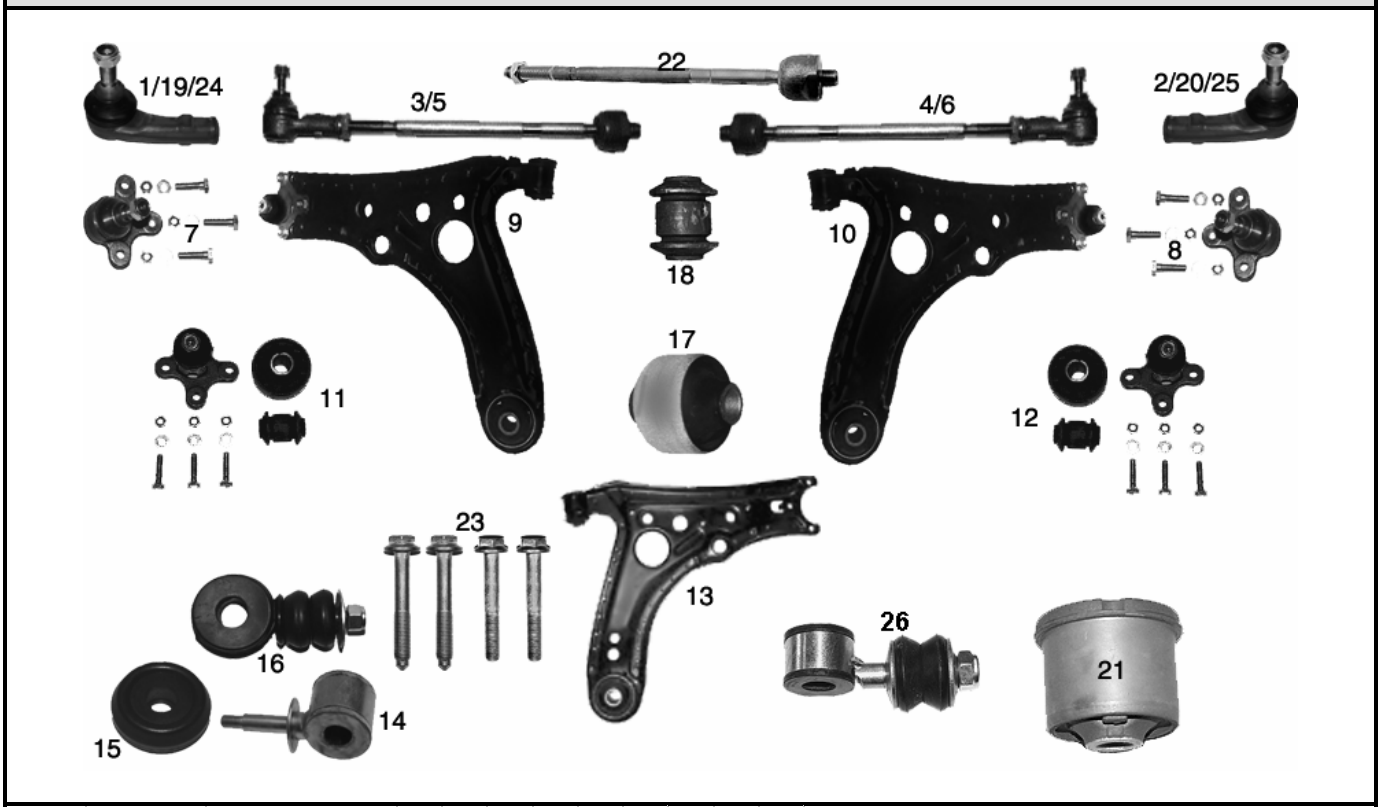


| NR | MAPCO | REF | | | ← | → | ↑ | ↓ | | | NEW | INFO |
|---|---|---|---|---|---|---|---|---|---|---|---|---|
| 1 | **19885** | 6N0419811 | ✓ | | ✓ | | | | ✓ | ✓ | | M14 x 1,5 RHT |
| 2 | **19886** | 6N0419812 | ✓ | | | ✓ | | | ✓ | ✓ | | M14 x 1,5 RHT |
| 3 | **19688** | 6N0419803 | ✓ | | ✓ | | | | | ✓ | | |
| 4 | **19689** | 6N0419804 | ✓ | | | ✓ | | | | ✓ | | |
| 5 | **59890** | 6X0422803A | ✓ | | ✓ | | | | ✓ | | | |
| 6 | **59889** | 6X0422804A | ✓ | | | ✓ | | | ✓ | | | |
| 7 | **19895** | 6N0407365 | ✓ | | ✓ | | | | ✓ | ✓ | | |
| 8 | **19896** | 6N0407365A | ✓ | | | ✓ | | | ✓ | ✓ | | |
| 9 | **19686** | 6N0407151A | ✓ | | ✓ | | | | ✓ | ✓ | | |
| 10 | **19687** | 6N0407151A | ✓ | | | ✓ | | | ✓ | ✓ | | |
| 11 | **19295** | | ✓ | | ✓ | | | | ✓ | ✓ | | Kit |
| 12 | **19296** | | ✓ | | | ✓ | | | ✓ | ✓ | | Kit |
| 13 | **19686/1** | | ✓ | | ✓ | ✓ | | | ✓ | ✓ | | |
| 14 | **49862** | 6N0411315 | ✓ | | ✓ | ✓ | | | ✓ | ✓ | | |
| 15 | **49862/9** | 6N0411329 | ✓ | | ✓ | ✓ | | | ✓ | ✓ | | |
| 16 | **49862/1** | | ✓ | | ✓ | ✓ | | | ✓ | ✓ | | **14 + 15(2x)** |
| 17 | **33835** | 6N0407181 | ✓ | | ✓ | ✓ | | | ✓ | ✓ | | |
| 18 | **33834** | 6N0407182 | ✓ | | ✓ | ✓ | | | ✓ | ✓ | | |
| 19 | **49871** | 6N0422811 | ✓ | | ✓ | | | | ✓ | | | M14 x 1,5 RHT |
| 20 | **49872** | 6N0422812 | ✓ | | | ✓ | | | ✓ | | | M14 x 1,5 RHT |
| 21 | **33937** | 6N0501541D | | ✓ | ✓ | ✓ | | | ✓ | ✓ | | |
| 22 | **19696/1** | **6N0 422 821A** | ✓ | | ✓ | ✓ | | | ✓ | | | M14x1,5 RH |
| 23 | **95686** | | ✓ | | ✓ | ✓ | | | ✓ | ✓ | | MS |
| 24 | **51822** | 6X0422811 | ✓ | | ✓ | | | | ✓ | | | M14x1,5 RHT |
| 25 | **51823** | 6X0422812 | ✓ | | | ✓ | | | ✓ | | | M14x1,5 RHT |
| 26 | **51862** | 191411315A | ✓ | | ✓ | ✓ | | | ✓ | ✓ | ✓ | Ø 18 mm |
| | | | | | | | | | | | | |

## VOLKSWAGEN POLO IV 10/01→

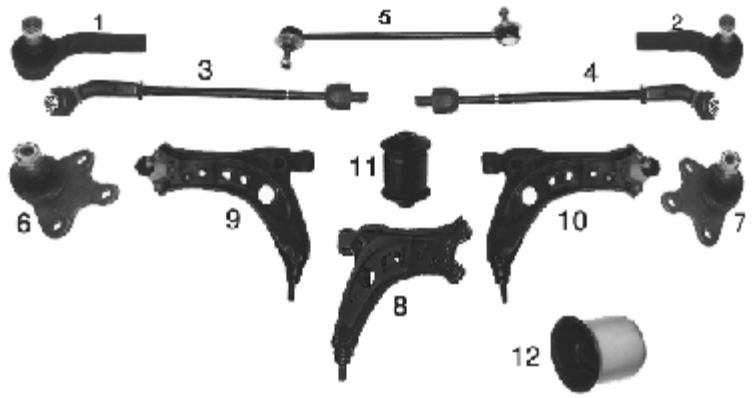


| NR | MAPCO | REF | | | ← | → | ↑ | ↓ | | | NEW | INFO |
|---|---|---|---|---|---|---|---|---|---|---|---|---|
| 1 | 59806 | 6Q0423811 | ✓ | | ✓ | | | | ✓ | ✓ | | |
| 2 | 59807 | 6Q0423812 | ✓ | | | ✓ | | | ✓ | ✓ | | |
| 3 | 59808 | 6Q0423803B | ✓ | | ✓ | | | | ✓ | ✓ | | |
| 4 | 59809 | 6Q0423804B | ✓ | | | ✓ | | | ✓ | ✓ | | |
| 5 | 59812HPS | 6Q0411315C | ✓ | | ✓ | ✓ | | | ✓ | ✓ | | |
| 6 | 59810 | 6Q0407365A | ✓ | | ✓ | | | | ✓ | ✓ | | |
| 7 | 59811 | 6Q0407366A | ✓ | | | ✓ | | | ✓ | ✓ | | |
| 8 | 59813 | 6Q0407151D | ✓ | | ✓ | ✓ | | | ✓ | ✓ | | |
| 9 | 59813/1 | | ✓ | | | ✓ | | | ✓ | ✓ | | 6 + 8 |
| 10 | 59813/2 | | ✓ | | | ✓ | | | ✓ | ✓ | | 7 + 8 |
| 11 | 36938 | 6Q0407182A | ✓ | | ✓ | ✓ | | | ✓ | ✓ | ✓ | |
| 12 | 36939 | 6Q0407183 | ✓ | | ✓ | ✓ | | | ✓ | ✓ | ✓ | |

## VOLKSWAGEN POLO CLASSIC 12/95→ 09/01

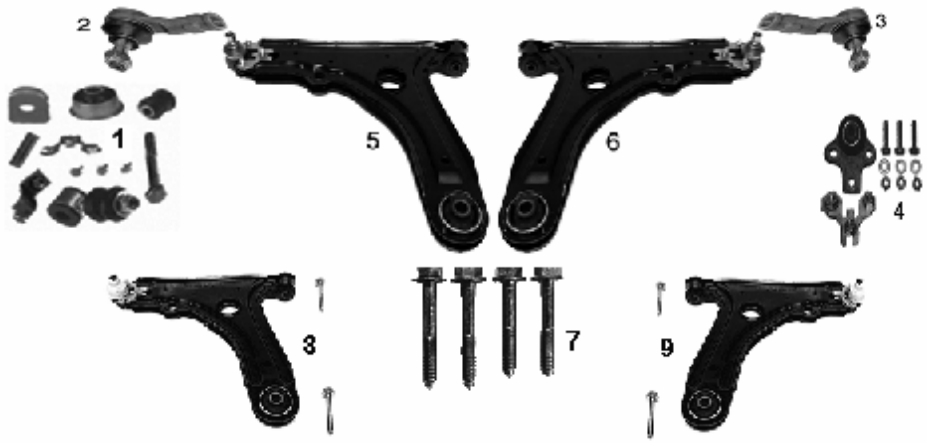


| NR | MAPCO | REF | | | ← | → | ↑ | ↓ | | | NEW | INFO |
|---|---|---|---|---|---|---|---|---|---|---|---|---|
| 1 | 33890 | | ✓ | | ✓ | ✓ | | | ✓ | ✓ | | |
| 2 | 19877 | 191419811 | ✓ | | ✓ | | | | ✓ | ✓ | | M14x1,5RHT |
| 3 | 19878 | 191419812 | ✓ | | | ✓ | | | ✓ | ✓ | | M14x1,5RHT |
| 4 | 19889/1 | 357407365A | ✓ | | ✓ | ✓ | | | ✓ | ✓ | | 19mm |
| 5 | 19858/1 | | ✓ | | ✓ | | | | ✓ | ✓ | | |
| 6 | 19858/2 | | ✓ | | | ✓ | | | ✓ | ✓ | | |
| 7 | 95858 | | ✓ | | ✓ | ✓ | | | ✓ | ✓ | | MS |
| 8 | 19858/7 | | ✓ | | ✓ | | | | ✓ | ✓ | | + |
| 9 | 19858/8 | | ✓ | | | ✓ | | | ✓ | ✓ | | + |

## VOLKSWAGEN SHARAN 05/95→

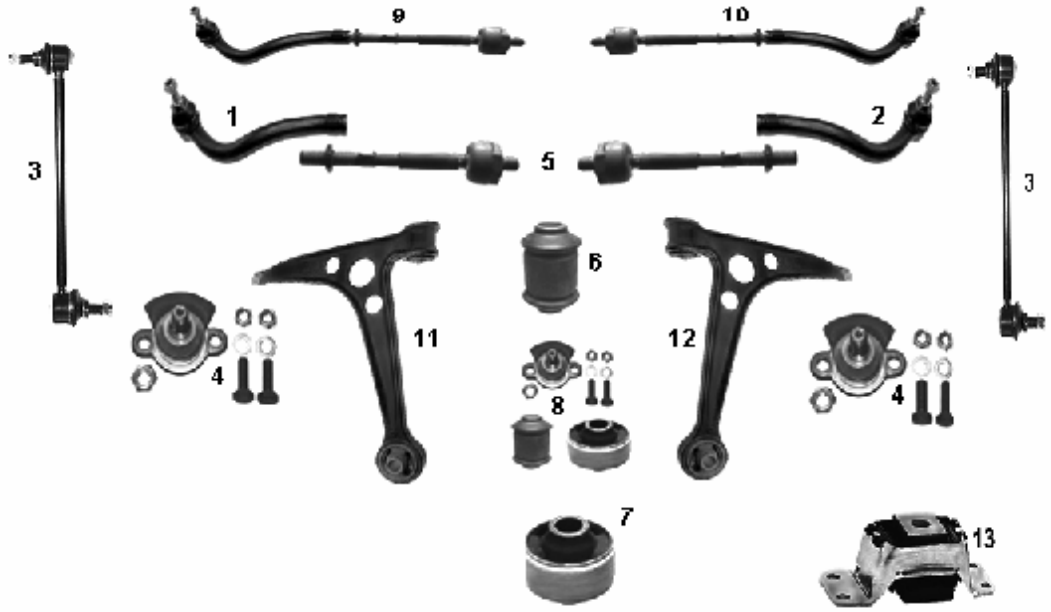


| NR | MAPCO | REF | | | ← | → | ↑ | ↓ | | | NEW | INFO |
|---|---|---|---|---|---|---|---|---|---|---|---|---|
| 1 | 49857 | 7M0422817 | ✓ | | ✓ | | | | ✓ | ✓ | | M14x1,50 RHT |
| 2 | 49858 | 7M0422818 | ✓ | | | ✓ | | | ✓ | ✓ | | M14x1,50 RHT |
| 3 | 49856HPS | 7M0411317 | ✓ | | ✓ | ✓ | | | ✓ | ✓ | | |
| 4 | 49861 | 7M0407365A | ✓ | | ✓ | ✓ | | | ✓ | ✓ | | |
| 5 | 49866 | 7M0422803G | ✓ | | ✓ | ✓ | | | ✓ | ✓ | | |
| 6 | 33908 | 7M0501541 | ✓ | | ✓ | ✓ | | | ✓ | ✓ | | |
| 7 | 33928 | 7M0407181A | ✓ | | ✓ | ✓ | | | ✓ | ✓ | | |
| 8 | 19266 | | ✓ | | ✓ | ✓ | | | ✓ | ✓ | | Kit |
| 9 | 49866/1 | 7M0422803G | ✓ | | ✓ | | | | ✓ | ✓ | | |
| 10 | 49866/2 | 7M0422804G | ✓ | | | ✓ | | | ✓ | ✓ | | |
| 11 | 49876 | 7M0407151B | ✓ | | ✓ | | | | ✓ | ✓ | | |
| 12 | 49877 | 7M0407152B | ✓ | | | ✓ | | | ✓ | ✓ | | |
| 13 | 33864 | 7M0505221C | | ✓ | ✓ | ✓ | | | ✓ | ✓ | | ✓ 1.8T 20V |

## VOLKSWAGEN TARO 04/89→03/97

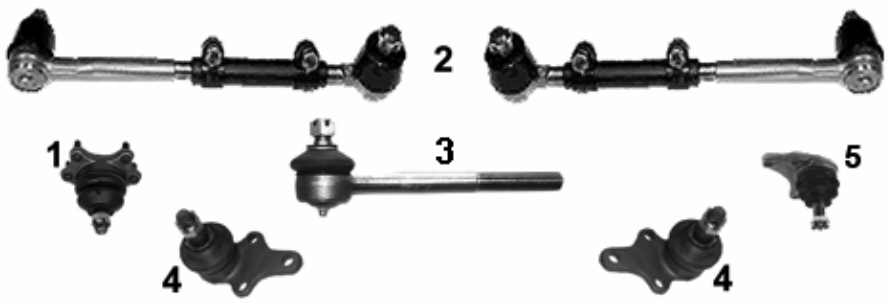


| NR | MAPCO | REF | | | ← | → | ↑ | ↓ | | | NEW | INFO |
|---|---|---|---|---|---|---|---|---|---|---|---|---|
| 1 | 59261 | 43350-39045 | ✓ | | ✓ | ✓ | ✓ | | ✓ | ✓ | | 17mm |
| 2 | 59262 | 45460-29215 | ✓ | | ✓ | ✓ | | | ✓ | ✓ | | |
| 3 | 59282 | 45046-39125 | ✓ | | ✓ | ✓ | | | ✓ | ✓ | | |
| 4 | 59569 | 43330-39245 | ✓ | | ✓ | ✓ | | ✓ | ✓ | ✓ | | |
| 5 | 59236 | 43350-39035 | ✓ | | ✓ | ✓ | ✓ | | ✓ | ✓ | | 15mm |

## VOLKSWAGEN TOURAN 02/03→

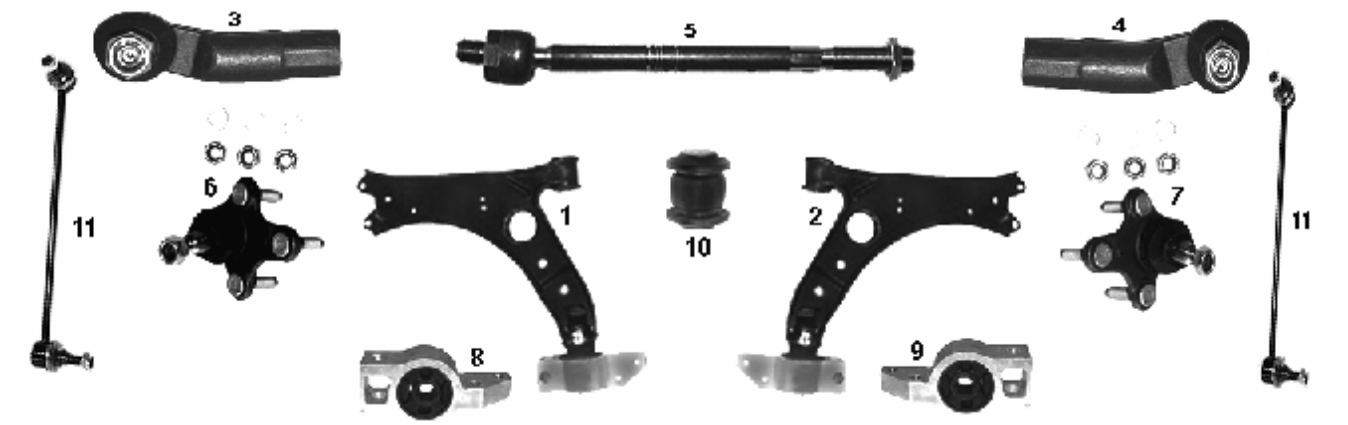


| NR | MAPCO | REF | | | ← | → | ↑ | ↓ | | | NEW | INFO |
|---|---|---|---|---|---|---|---|---|---|---|---|---|
| 1 | 51715 | 1K0 407 151P | ✓ | | ✓ | | | ✓ | ✓ | ✓ | | |
| 2 | 51716 | 1K0 407 152P | ✓ | | | ✓ | | ✓ | ✓ | ✓ | | |
| 3 | 51826 | 1K0 423 811A | ✓ | | ✓ | | | | ✓ | ✓ | | |
| 4 | 51827 | 1K0 423 812A | ✓ | | | ✓ | | | ✓ | ✓ | | |
| 5 | 51723 | 1K0 423 810A | ✓ | | ✓ | ✓ | | | ✓ | ✓ | | M16x1,5RHT L=310 mm |
| 6 | 51724 | 1K0 407 365E | ✓ | | ✓ | | | ✓ | ✓ | ✓ | | Konus 16,00 mm |
| 7 | 51725 | 1K0 407 366E | ✓ | | | ✓ | | ✓ | ✓ | ✓ | | Konus 16,00 mm |
| 8 | 36948 | 1K0 199 231G | ✓ | | ✓ | | | ✓ | ✓ | ✓ | ✓ | |
| 9 | 36949 | 1K0 199 232G | ✓ | | | ✓ | | ✓ | ✓ | ✓ | ✓ | |
| 10 | 36950 | 1K0 407 182 | ✓ | | ✓ | ✓ | | ✓ | ✓ | ✓ | ✓ | |
| 11 | 51825HPS | 1K0 411 315D | ✓ | | ✓ | ✓ | | ✓ | ✓ | ✓ | ✓ | |

## VOLKSWAGEN TOUAREG (7LA) 10/02→

| NR | MAPCO | REF | | | ← | → | ↑ | ↓ | | | NEW | INFO |
|---|---|---|---|---|---|---|---|---|---|---|---|---|
| 1 | 51824 | 7L0 411 317 | ✓ | | ✓ | ✓ | | | ✓ | ✓ | | L= 197,0 mm |
| | | | | | | | | | | | | |
| | | | | | | | | | | | | |

## VOLKSWAGEN TRANSPORTER LT 28 - 35 I BUS 1975→ 06/96
## VOLKSWAGEN TRANSPORTER LT 40 - 45 I Kasten / Pritsche 1978→ 06/96

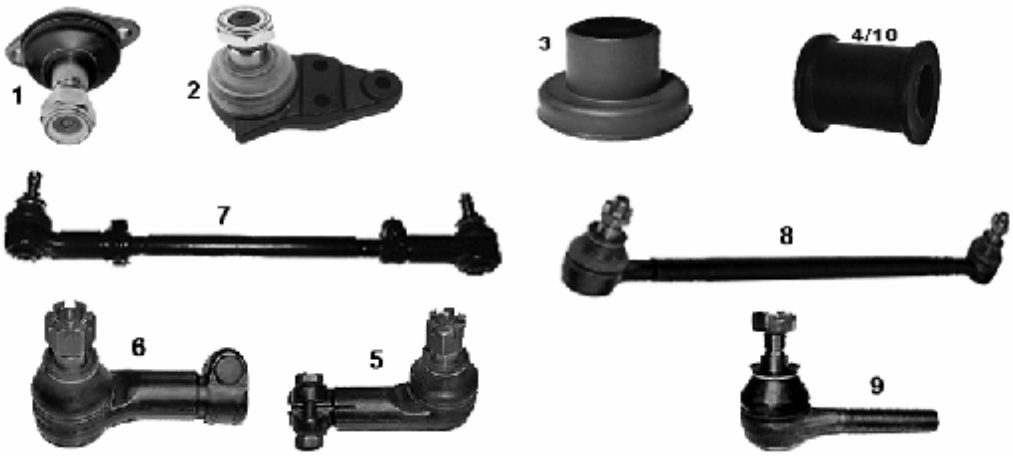


| NR | MAPCO | REF | | | ← | → | ↑ | ↓ | | | NEW | INFO |
|---|---|---|---|---|---|---|---|---|---|---|---|---|
| 1 | **19851** | 281407361 | ✓ | | ✓ | ✓ | ✓ | | ✓ | ✓ | | |
| 2 | **19852** | 281407187A | ✓ | | ✓ | ✓ | | ✓ | ✓ | ✓ | | |
| 3 | **33929** | 281407077 | ✓ | | ✓ | ✓ | | | ✓ | ✓ | | aussen/outside |
| 4 | **33815** | 281411041 | ✓ | | ✓ | ✓ | | ✓ | ✓ | ✓ | | **L 47mm, Ø innen/inner 21mm** |
| 5 | **51802** | 281415 801D part | ✓ | | ✓ | ✓ | | | ✓ | ✓ | | 14,5mm aussen/outside M16x1,50RHT |
| 6 | **51803** | 281415 801D part | ✓ | | ✓ | ✓ | | | ✓ | ✓ | | 14,5mm innen/inner M16x1,50LHT |
| 7 | **51806** | 281415 801D | ✓ | | ✓ | | | | ✓ | ✓ | | |
| 8 | **51805** | 281415 802A | ✓ | | | ✓ | | | ✓ | ✓ | | |
| 9 | **51808** | 281415 811 | ✓ | | ✓ | ✓ | | | ✓ | ✓ | | 16mm aussen/outside M14x1,50LHT |
| 10 | **33945** | 281411045 | ✓ | | ✓ | ✓ | | | ✓ | ✓ | | **L 31mm Ø innen/inner 21mm** |

## VOLKSWAGEN TRANSPORTER LT 28 - 31 - 35 II BUS 04/96→
## LT 28 - 46 II Kasten / Pritsche 04/96→

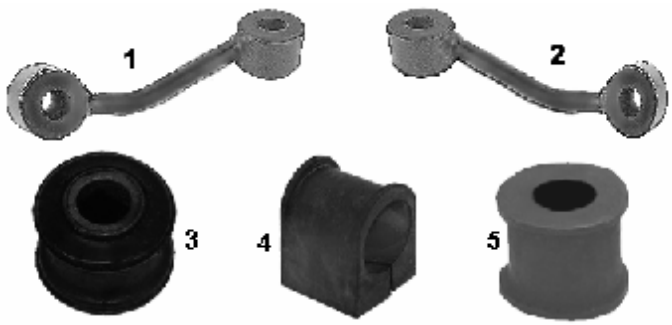


| NR | MAPCO | REF | | | ← | → | ↑ | ↓ | | | NEW | INFO |
|---|---|---|---|---|---|---|---|---|---|---|---|---|
| 1 | **59854** | 2D0411051 | ✓ | | ✓ | | | | ✓ | ✓ | | |
| 2 | **59855** | 2D0411052 | ✓ | | | ✓ | | | ✓ | ✓ | | |
| 3 | **33946** | 2D0511413 | ✓ | | ✓ | ✓ | | | ✓ | ✓ | | Ø innen/inner 12mm |
| 4 | **33947** | 2D0411041B | ✓ | | ✓ | ✓ | | | ✓ | ✓ | | Ø innen/inner 25mm |
| 5 | **36947** | 2D0411041A | ✓ | | ✓ | ✓ | | | ✓ | ✓ | ✓ | |

## VOLKSWAGEN TRANSPORTER T2 — 08/67→07/79
## VOLKSWAGEN TRANSPORTER T3 — 05/79→07/92

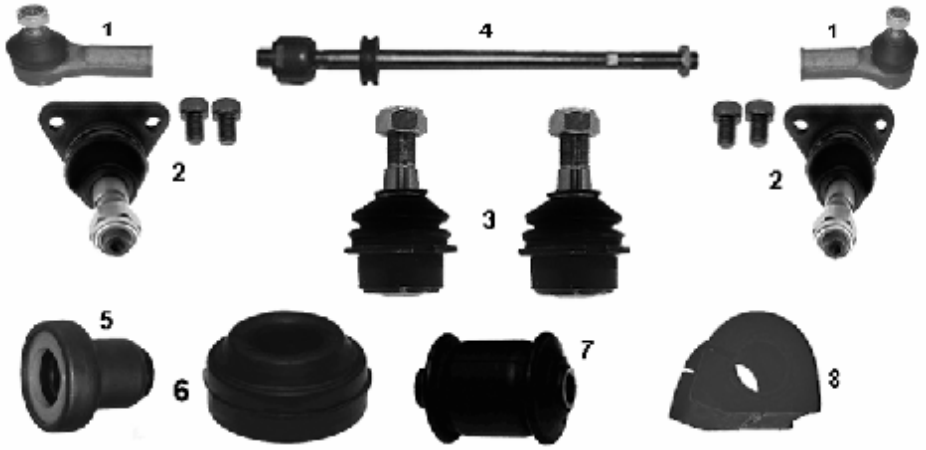


| NR | MAPCO | REF | | | ← | → | ↑ | ↓ | | | NEW | INFO |
|---|---|---|---|---|---|---|---|---|---|---|---|---|
| 1 | **19874** | 171419812 | ✓ | | ✓ | ✓ | | | ✓ | ✓ | | M14x1,5 RHT |
| 2 | **19883** | 251407361 | ✓ | | ✓ | ✓ | ✓ | | ✓ | ✓ | | 1979→1992 ✓ **T3** |
| 3 | **19881** | 211405371A | ✓ | | ✓ | ✓ | | ✓ | ✓ | ✓ | | →12/78 ✓ **T2** |
| 3 | **19884** | 251407187B | ✓ | | ✓ | ✓ | | ✓ | ✓ | ✓ | | 1979→1992 ✓ **T3** |
| 4 | **19887** | | ✓ | | ✓ | ✓ | | | ✓ | ✓ | | M14 x 1,5 RHT |
| 5 | **33859** | 251407077 | ✓ | | ✓ | ✓ | | | ✓ | ✓ | | |
| 6 | **33900** | 251407175 | ✓ | | ✓ | ✓ | | | ✓ | ✓ | | |
| 7 | **33896** | 251407183 | ✓ | | ✓ | ✓ | | | ✓ | ✓ | | |
| 8 | **33814** | 251 411 041C | ✓ | | ✓ | ✓ | | | ✓ | ✓ | | Chassis 24-E-145100→ kg **1200** |

**VERGLEICHSNUMMERN DIENEN NUR ZUR BESSEREN IDENTIFIKATION UND DÜRFEN NICHT AUF RECHNUNGEN ERSCHEINEN!!!**
**Reference numbers are used for better identification only !**
**Références d´origine pour meilleure identification seulement !**

## VOLKSWAGEN TRANSPORTER T4 09/90→

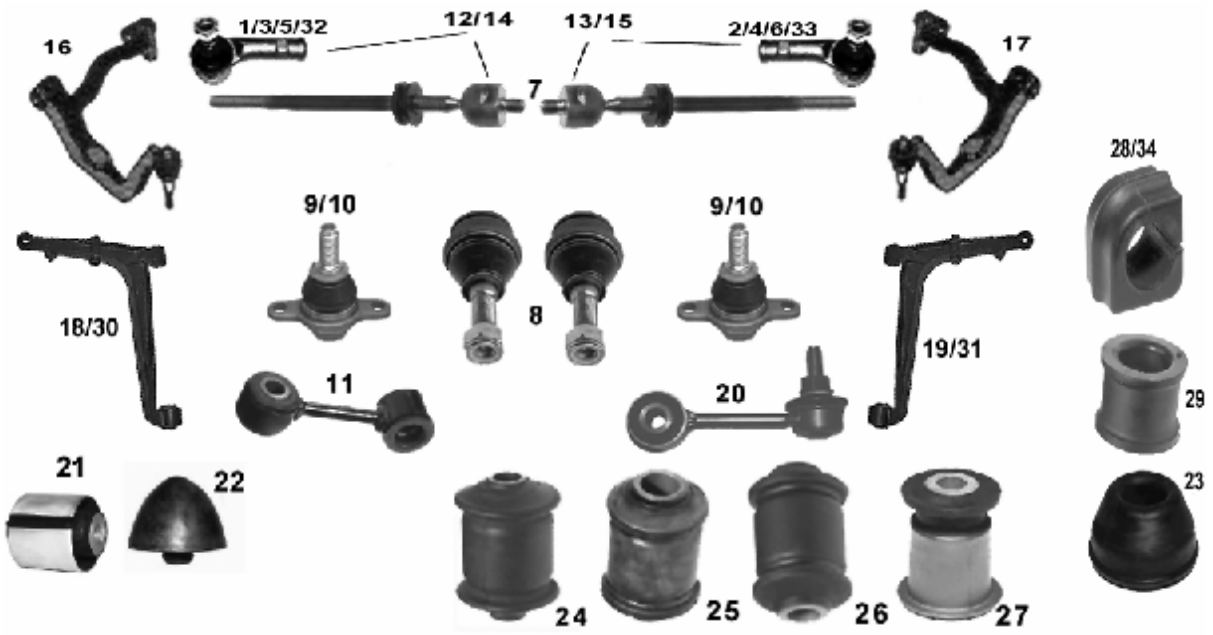


| NR | MAPCO | REF | | | ← | → | ↑ | ↓ | | | NEW | INFO |
|---|---|---|---|---|---|---|---|---|---|---|---|---|
| 1 | 19859 | 701419811A | ✓ | | ✓ | | | | ✓ | ✓ | | Chassis → 70M096448 M16x1,5RHT |
| 2 | 19880 | 701419812 | ✓ | | | ✓ | | | ✓ | ✓ | | Chassis → 70M096448 M16x1,5RHT |
| 3 | 19866 | 701419811B | ✓ | | ✓ | | | | ✓ | ✓ | | Chassis 70M096449→70S002791 →08/94 M16x1,5RHT |
| 4 | 19867 | 701419812A | ✓ | | | ✓ | | | ✓ | ✓ | | Chassis 70M096449→70S002791 →08/94 M16x1,5RHT |
| 5 | 19873 | 701419811C | ✓ | | ✓ | | | | ✓ | ✓ | | 18 mm |
| 6 | 19882 | 701419812B | ✓ | | | ✓ | | | ✓ | ✓ | | 18 mm |
| 7 | 49764 | | ✓ | | ✓ | ✓ | | | ✓ | ✓ | | |
| 8 | 19868 | 701407187B | ✓ | | ✓ | ✓ | ✓ | | ✓ | ✓ | | |
| 9 | 19869 | 701407361C | ✓ | | ✓ | ✓ | | | ✓ | ✓ | | →12/95 |
| 10 | 49859 | 7D0407361 | ✓ | | ✓ | ✓ | | | ✓ | ✓ | | 01/96→ |
| 11 | 49851 | 7D0411049 | ✓ | | ✓ | ✓ | | | ✓ | ✓ | | |
| 12 | 49766 | 701419803D | ✓ | | ✓ | | | | ✓ | ✓ | | **3 + 7** |
| 13 | 49767 | 701419804D | ✓ | | | ✓ | | | ✓ | ✓ | | **4 + 7** |
| 14 | 49773 | 701419803E | ✓ | | ✓ | | | | ✓ | ✓ | | **5 + 7** |
| 15 | 49774 | 701419804E | ✓ | | | ✓ | | | ✓ | ✓ | | **6 + 7** |
| 16 | 49852 | 701407021B | ✓ | | ✓ | | ✓ | | ✓ | ✓ | | →12/95 |
| 17 | 49853 | 701407022B | ✓ | | | ✓ | ✓ | | ✓ | ✓ | | →12/95 |
| 18 | 49854 | 701407151A | ✓ | | ✓ | | | ✓ | ✓ | ✓ | | →12/95 |
| 19 | 49855 | 701407152A | ✓ | | | ✓ | | ✓ | ✓ | ✓ | | →12/95 |
| 20 | 49863 | 701411049B | ✓ | | ✓ | ✓ | | | ✓ | ✓ | | |
| 21 | 33872 | 7D0407140 | ✓ | | ✓ | ✓ | | ✓ | ✓ | ✓ | | |
| 22 | 33873 | 701407303 | ✓ | | ✓ | ✓ | | | ✓ | ✓ | | |
| 23 | 33897 | 251407179 | | ✓ | ✓ | ✓ | | | ✓ | ✓ | | |
| 24 | 33913 | 701407077 | ✓ | | ✓ | ✓ | | | ✓ | ✓ | | |
| 25 | 33914 | 701407183 | ✓ | | ✓ | ✓ | | | ✓ | ✓ | | |
| 26 | 33915 | 701407087 | ✓ | | ✓ | ✓ | | | ✓ | ✓ | | |
| 27 | 33916 | 7D0407183 | ✓ | | ✓ | ✓ | | | ✓ | ✓ | | |
| 28 | 33925 | 701411041 | ✓ | | ✓ | ✓ | | | ✓ | ✓ | | Innen/inner Ø 23mm |
| 29 | 33926 | 7D0411045 | ✓ | | ✓ | ✓ | | | ✓ | ✓ | | |
| 30 | 59804 | 7D0407151A | ✓ | | ✓ | | | ✓ | ✓ | ✓ | | 01/96→ |
| 31 | 59805 | 7D0407152A | ✓ | | | ✓ | | ✓ | ✓ | ✓ | | 01/96→ |
| 32 | 59814 | 701419811E | ✓ | | ✓ | | | | ✓ | ✓ | | 01/96→ Chassis 70-T-200000→ |
| 33 | 59815 | 701419812D | ✓ | | | ✓ | | | ✓ | ✓ | | 01/96→ Chassis 70-T-200000→ |
| 34 | 36940 | 701411041D | ✓ | | ✓ | ✓ | | | ✓ | ✓ | | Innen/inner Ø 27mm |

## VOLKSWAGEN TRANSPORTER T4 Kit's 09/90→

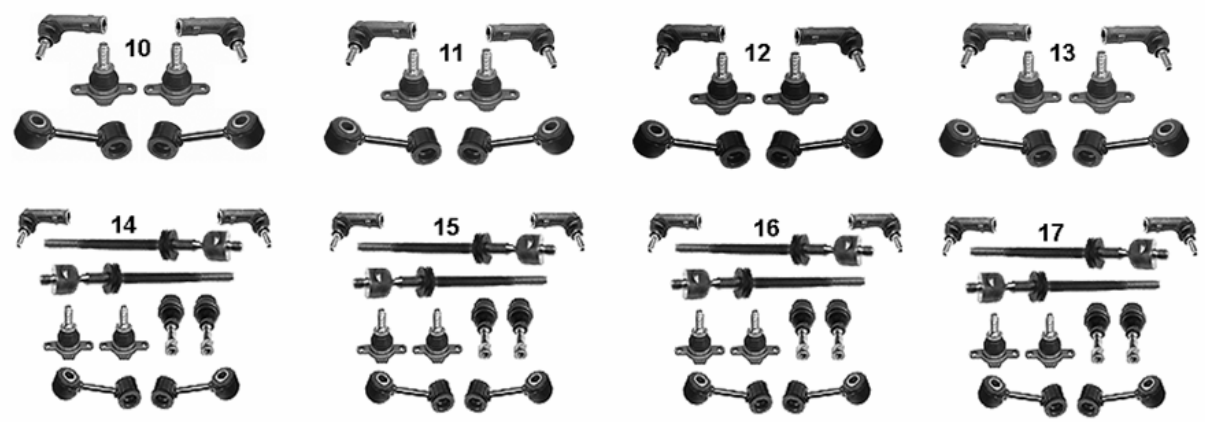


| NR | MAPCO | REF | | | ← | → | ↑ | ↓ | | | NEW | INFO |
|---|---|---|---|---|---|---|---|---|---|---|---|---|
| 1 | 19267 | | ✓ | | ✓ | ✓ | | ✓ | ✓ | ✓ | | 01/96→ |
| 2 | 19267/2 | | ✓ | | ✓ | ✓ | | | ✓ | ✓ | | 2 x 19267 01/96→ |
| 3 | 19268 | | ✓ | | ✓ | ✓ | ✓ | | ✓ | ✓ | | 08/91→ |
| 4 | 19268/2 | | ✓ | | ✓ | ✓ | ✓ | | ✓ | ✓ | | 2 x 19268 08/91→ |
| 5 | 19269 | | ✓ | | ✓ | ✓ | | ✓ | ✓ | ✓ | | 08/91 → 12/95 |
| 6 | 19269/2 | | ✓ | | ✓ | ✓ | | ✓ | ✓ | ✓ | | 2 x 19269 08/91 → 12/95 |
| 7 | 19290 | | ✓ | | ✓ | ✓ | ✓ | | ✓ | ✓ | | 08/91→ |
| 8 | 19291 | | ✓ | | ✓ | ✓ | | ✓ | ✓ | ✓ | | 08/91 → 12/95 |
| 9 | 19292 | | ✓ | | ✓ | ✓ | | ✓ | ✓ | ✓ | | 01/96→ |
| 10 | 51811 | | ✓ | | ✓ | ✓ | | | ✓ | ✓ | | -> 07/91 Chassis -> 70-M-096 448 |
| 11 | 51812 | | ✓ | | ✓ | ✓ | | | ✓ | ✓ | | ->08/94 Chassis 70-M-096 449 ->70-S-002 791 |
| 12 | 51813 | | ✓ | | ✓ | ✓ | | | ✓ | ✓ | | ->11/95 Chassis 70-S-002 792 ->70-T-199 999 |
| 13 | 51814 | | ✓ | | ✓ | ✓ | | | ✓ | ✓ | | 11/95-> Chassis 70-T-200 000 -> |
| 14 | 51815 | | ✓ | | ✓ | ✓ | | | ✓ | ✓ | | -> 07/91 Chassis -> 70-M-096 448 |
| 15 | 51816 | | ✓ | | ✓ | ✓ | | | ✓ | ✓ | | ->08/94 Chassis 70-M-096 449 ->70-S-002 791 |
| 16 | 51817 | | ✓ | | ✓ | ✓ | | | ✓ | ✓ | | ->11/95 Chassis 70-S-002 792 ->70-T-199 999 |
| 17 | 51818 | | ✓ | | ✓ | ✓ | | | ✓ | ✓ | | 11/95-> Chassis 70-T-200 000 -> |

## VOLKSWAGEN TRANSPORTER T5 / MULTIVAN T5 04/03 →

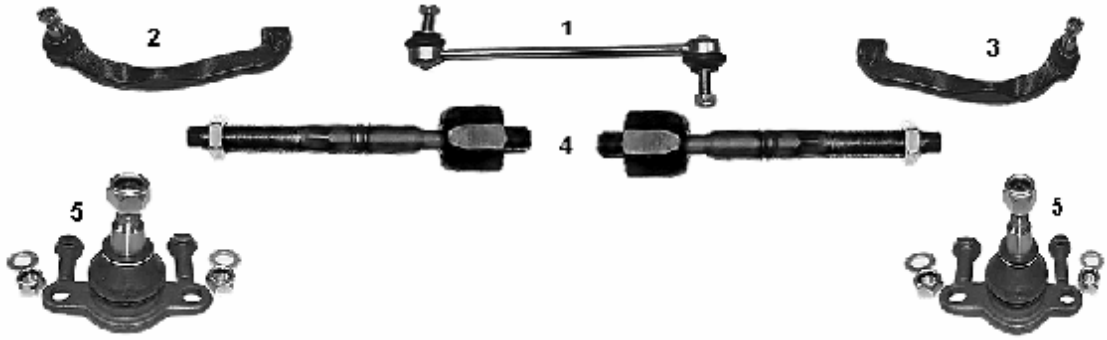


| NR | MAPCO | REF | | | ← | → | ↑ | ↓ | | | NEW | INFO |
|---|---|---|---|---|---|---|---|---|---|---|---|---|
| 1 | **51718HPS** | 7H5 411 317 | ✓ | | ✓ | ✓ | | | ✓ | ✓ | ✓ | |
| 2 | **51719** | 7H0 422 817C | ✓ | | ✓ | | | | ✓ | ✓ | | M16x1,5 |
| 3 | **51720** | 7H0 422 818C | ✓ | | | ✓ | | | ✓ | ✓ | | M16x1,5 |
| 4 | **51722** | 7H0 419 803C part of | ✓ | | ✓ | ✓ | | | ✓ | ✓ | | M16x1,5 |
| 5 | **51721** | 7E0 407 361 | ✓ | | ✓ | ✓ | | ✓ | ✓ | ✓ | | |

# VOLVO

## VOLVO 242 - 244 - 245
## VOLVO 262 - 264 - 265 08/74→08/93

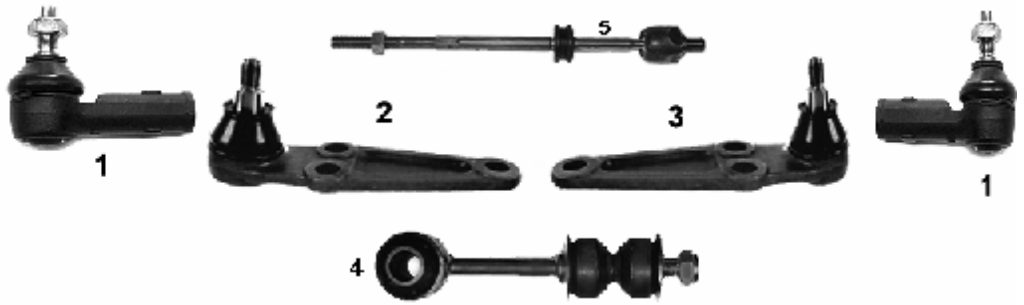


| NR | MAPCO | REF | | | ← | → | ↑ | ↓ | | | NEW | INFO |
|---|---|---|---|---|---|---|---|---|---|---|---|---|
| 1 | **19906** | 1205658 | ✓ | | ✓ | ✓ | | | ✓ | ✓ | | M14x2RHT |
| 2 | **19902** | 1330821 | ✓ | | ✓ | | | | ✓ | | | 1978→ |
| 3 | **19901** | 1330820 | ✓ | | | ✓ | | | ✓ | | | 1978→ |
| 4 | **19915** | 1206667 | ✓ | | ✓ | ✓ | | | ✓ | ✓ | | Innen/inner ∅ 10mm |
| 5 | **49952** | 353 0167 | ✓ | | ✓ | ✓ | | | ✓ | ✓ | | M14x1,5RHT L= 252 mm **ZF** |

## VOLVO 480 E 04/86→ 09/95
## VOLVO 440 K - 460 L 08/88→ 12/96

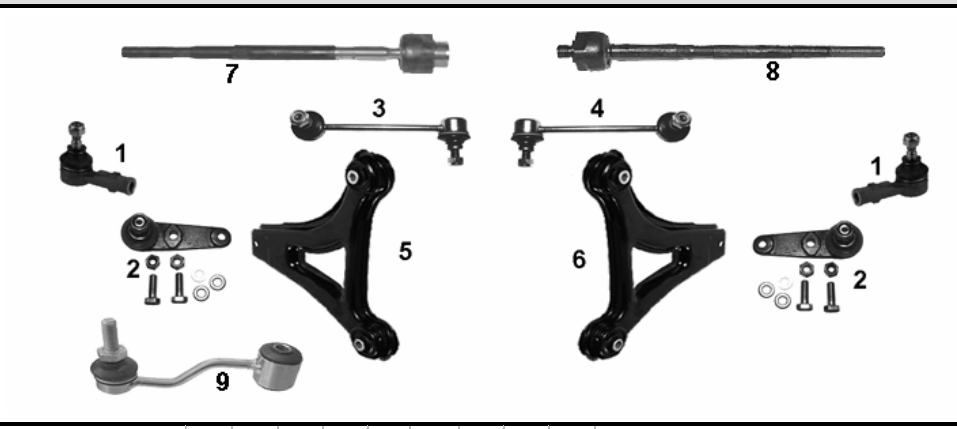


| NR | MAPCO | REF | | | ← | → | ↑ | ↓ | | | NEW | INFO |
|---|---|---|---|---|---|---|---|---|---|---|---|---|
| 1 | 19908 | 3480012 | ✓ | | ✓ | ✓ | | | ✓ | ✓ | | M12x1,5RHT |
| 2 | 19909 | 3410519 | ✓ | | ✓ | ✓ | | | ✓ | ✓ | | |
| 3 | 49901 | 8416 129 | ✓ | | ✓ | | | | ✓ | ✓ | | |
| 4 | 49902 | 8416 130 | ✓ | | | ✓ | | | ✓ | ✓ | | |
| 5 | 49925 | 3443 998 | ✓ | | ✓ | | | | ✓ | ✓ | | D |
| 6 | 49926 | 3443 999 | ✓ | | | ✓ | | | ✓ | ✓ | | D |
| 7 | 49928 | 3410 369 | ✓ | | ✓ | ✓ | | | | ✓ | | M14x1,50RHT L=268,0 mm |
| 8 | 49944 | 334 2824 | ✓ | | ✓ | ✓ | | | ✓ | | | M16x1,5 RHT L=289,0 mm |
| 9 | 19903 | 343 4868 | | ✓ | ✓ | ✓ | | | ✓ | ✓ | | |

## VOLVO 740 08/83→08/92
## VOLVO 760 02/82→07/92
## VOLVO 780 Coupé 08/86→07/90

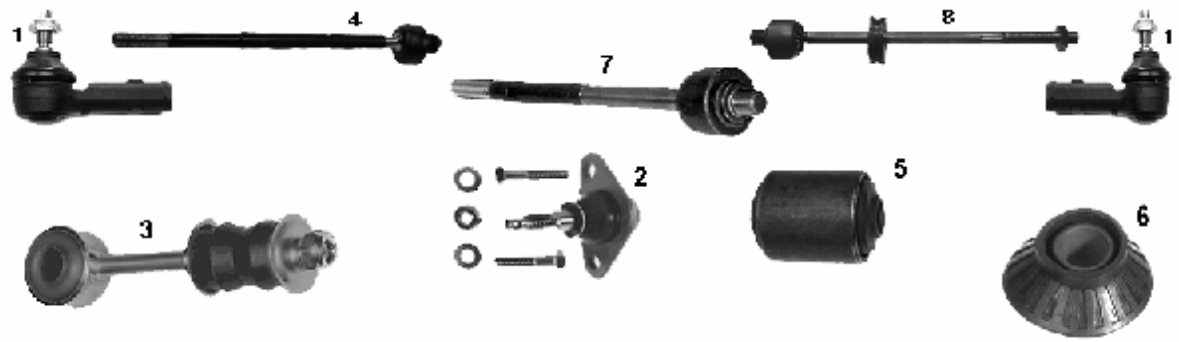


| NR | MAPCO | REF | | | ← | → | ↑ | ↓ | | | NEW | INFO |
|---|---|---|---|---|---|---|---|---|---|---|---|---|
| 1 | 19906 | 1 205 658 | ✓ | | ✓ | ✓ | | | ✓ | ✓ | | M14 x 2,0 RHT |
| 2 | 19907 | 1 229 573 | ✓ | | ✓ | ✓ | | | ✓ | ✓ | | |
| 3 | 19913 | 9 157 725 | ✓ | | ✓ | ✓ | | | ✓ | ✓ | | Innen/inner ∅ 12 mm |
| 4 | 49900 | 1 273 126 | ✓ | | ✓ | ✓ | | | ✓ | ✓ | | M18X1,5RHT **TRW** |
| 5 | 33917 | 1 329 655 | ✓ | | ✓ | ✓ | | | ✓ | ✓ | | ✓ 740+760 |
| 6 | 33923 | 6 819 057 | ✓ | | ✓ | ✓ | | | ✓ | ✓ | | |
| 7 | 49942 | 9140 504 | ✓ | | ✓ | ✓ | | | ✓ | ✓ | | M14x1,5RHT L=250,0 mm **CAM** |
| 8 | 49943 | 1387 356 | ✓ | | ✓ | ✓ | | | ✓ | ✓ | | M14x2,0RHT **ZF** |

## VOLVO 850 — 06/91→12/96

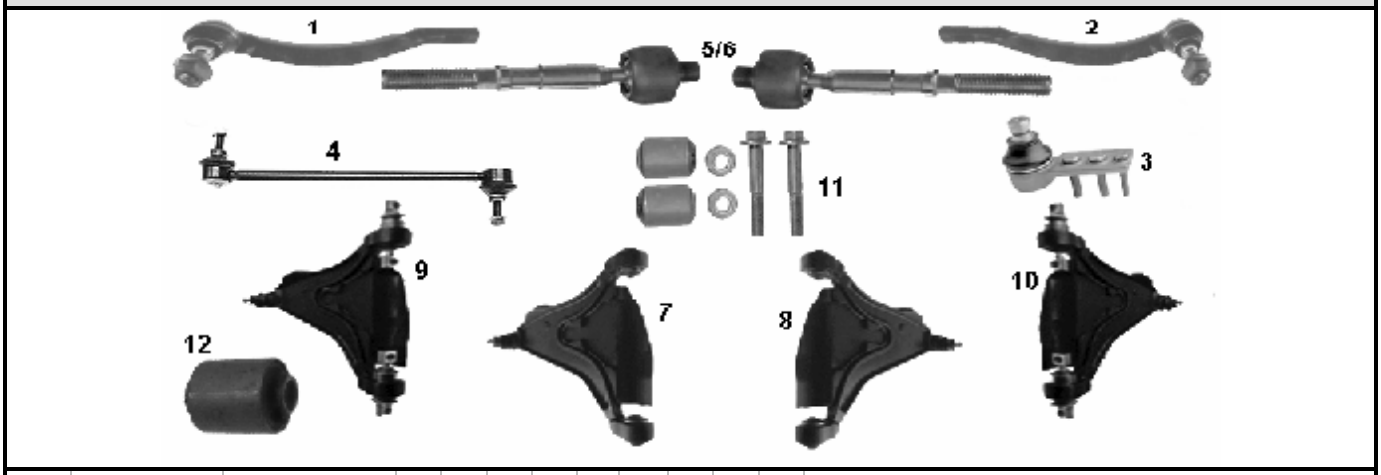


| NR | MAPCO | REF | | | ← | → | ↑ | ↓ | | | NEW | INFO |
|---|---|---|---|---|---|---|---|---|---|---|---|---|
| 1 | 19910 | 271598.5 | ✓ | | ✓ | | | | ✓ | ✓ | | M14x2,0RHT |
| 2 | 19911 | 271599.3 | ✓ | | | ✓ | | | ✓ | ✓ | | M14x2,0RHT |
| 3 | 19912 | 271591.0 | ✓ | | ✓ | ✓ | | | ✓ | ✓ | | |
| 4 | 19914HPS | 1387860 | ✓ | | ✓ | ✓ | | | ✓ | ✓ | | |
| 5 | 49917 | 3546266 | ✓ | | ✓ | ✓ | | | ✓ | ✓ | | **TRW** |
| 6 | 49954 | 919 1410 | ✓ | | ✓ | ✓ | | | ✓ | ✓ | | L=203 mm **SMI** |
| 7 | 49912 | 271901 | ✓ | | ✓ | | | | ✓ | ✓ | | **Turbo** |
| 8 | 49913 | 271902 | ✓ | | | ✓ | | | ✓ | ✓ | | **Turbo** |
| 9 | 49914 | 272336 | ✓ | | ✓ | | | | ✓ | ✓ | | ✓ **Turbo** |
| 10 | 49915 | 272337 | ✓ | | | ✓ | | | ✓ | ✓ | | ✓ **Turbo** |
| 11 | 36975 | 271631 | ✓ | | ✓ | ✓ | | | ✓ | ✓ | | **KIT** |
| 12 | 36976 | 6800251 | ✓ | | ✓ | ✓ | | | ✓ | ✓ | ✓ | |

## VOLVO 940 I + II — 1990→ 10/98

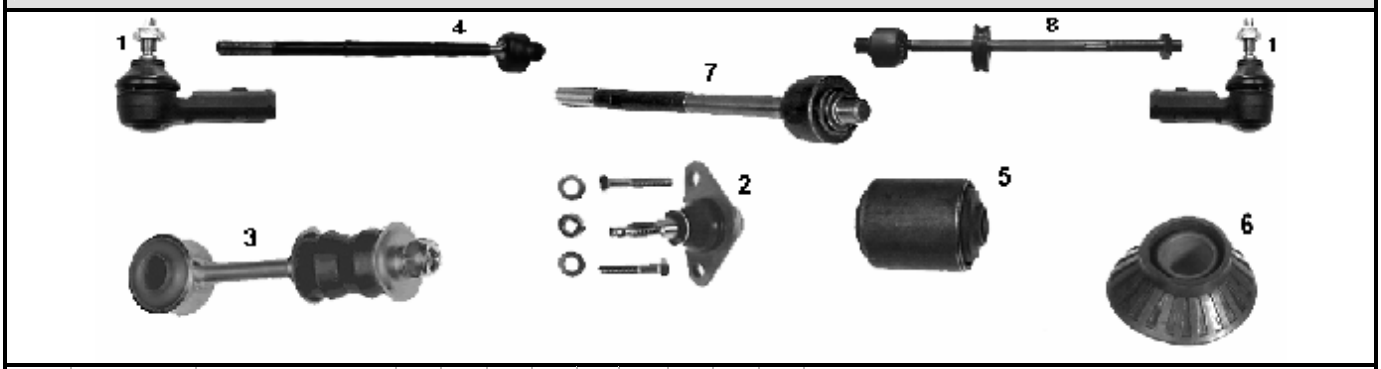


| NR | MAPCO | REF | | | ← | → | ↑ | ↓ | | | NEW | INFO |
|---|---|---|---|---|---|---|---|---|---|---|---|---|
| 1 | 19906 | 1 205 658 | ✓ | | ✓ | ✓ | | | ✓ | ✓ | | M14 x 2,0 RHT |
| 2 | 19907 | 1 229 573 | ✓ | | ✓ | ✓ | | | ✓ | ✓ | | |
| 3 | 19913 | 9 157 725 | ✓ | | ✓ | ✓ | | | ✓ | ✓ | | Innen/inner ∅ 12 mm |
| 4 | 49900 | 1 273 126 | ✓ | | ✓ | ✓ | | | ✓ | ✓ | | M18X1,5RHT **TRW** |
| 5 | 33917 | 1 329 655 | ✓ | | ✓ | ✓ | | | ✓ | ✓ | | ✓ 740+760 |
| 6 | 49918 | 9140788F | ✓ | | ✓ | ✓ | | | ✓ | ✓ | | **TRW** |
| 7 | 49942 | 9140 504 | ✓ | | ✓ | ✓ | | | ✓ | ✓ | | M14x1,5RHT L=250,0 mm **CAM** |
| 8 | 49943 | 1 387 356 | ✓ | | ✓ | ✓ | | | ✓ | ✓ | | M14x2,0RHT **ZF** |

## VOLVO 960 I + II — 08/90→ 12/96

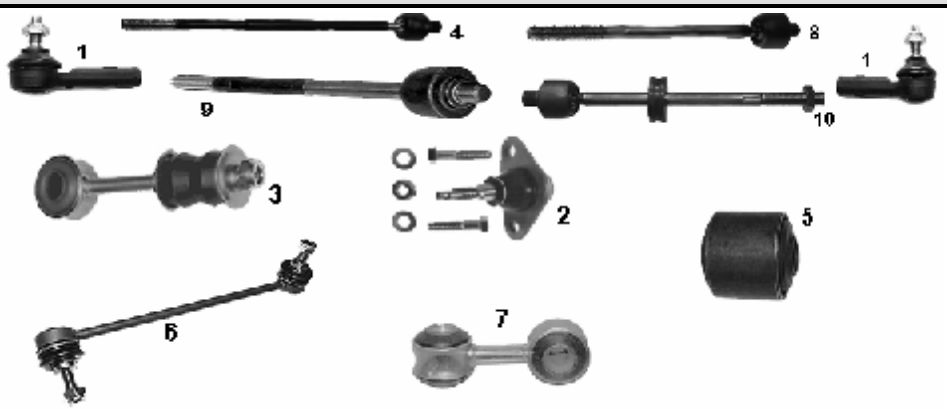


| NR | MAPCO | REF | | | ← | → | ↑ | ↓ | | | NEW | INFO |
|---|---|---|---|---|---|---|---|---|---|---|---|---|
| 1 | **19906** | 1 205 658 | ✓ | | ✓ | ✓ | | | ✓ | ✓ | | M14 x 2,0 RHT |
| 2 | **19907** | 1 229 573 | ✓ | | ✓ | ✓ | | | ✓ | ✓ | | |
| 3 | **19913** | 9 157 725 | ✓ | | ✓ | ✓ | | | ✓ | ✓ | | Innen/inner ∅ 12 mm |
| 4 | **49900** | 1 273 126 | ✓ | | ✓ | ✓ | | | ✓ | ✓ | | M18X1,5RHT **TRW** |
| 5 | **33917** | 1 329 655 | ✓ | | ✓ | ✓ | | | ✓ | ✓ | | |
| 6 | **19937HPS** | 9 492 837 | ✓ | | ✓ | ✓ | | | ✓ | ✓ | | |
| 7 | **19938** | 3 530 304-9 | | ✓ | ✓ | ✓ | | | ✓ | ✓ | | |
| 8 | **49918** | 9140788F | ✓ | | ✓ | ✓ | | | ✓ | ✓ | | **TRW** |
| 9 | **49942** | 9140 504 | ✓ | | ✓ | ✓ | | | ✓ | ✓ | | M14x1,5RHT L=250,0 mm **CAM** |
| 10 | **49943** | 1 387 356 | ✓ | | ✓ | ✓ | | | ✓ | ✓ | | M14x2,0RHT **ZF** |

## VOLVO S40 I (VS) — 07/95→12/03
## VOLVO V40 (VW) — 07/95→

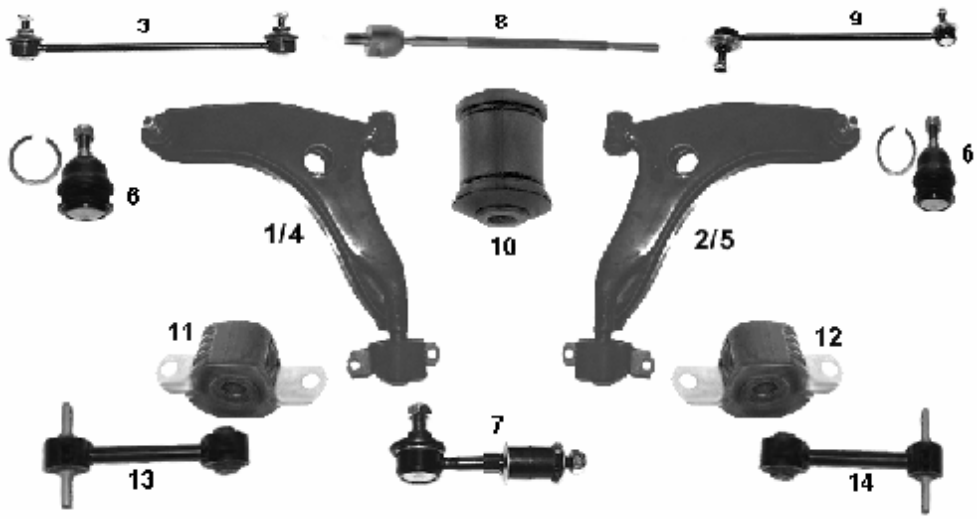


| NR | MAPCO | REF | | | ← | → | ↑ | ↓ | | | NEW | INFO |
|---|---|---|---|---|---|---|---|---|---|---|---|---|
| 1 | **49907** | 30887025 | ✓ | | ✓ | | | | ✓ | ✓ | | 01/98→2001 |
| 2 | **49908** | 30887033 | ✓ | | | ✓ | | | ✓ | ✓ | | 01/98→2001 |
| 3 | **49905** | 30871770 | ✓ | | ✓ | ✓ | | | ✓ | ✓ | | |
| 4 | **49544** | 30889962 | ✓ | | ✓ | | | | ✓ | ✓ | | → 1997 |
| 5 | **49545** | 30889963 | ✓ | | | ✓ | | | ✓ | ✓ | | → 1997 |
| 6 | **49578** | 30863990 | ✓ | | ✓ | ✓ | | | ✓ | ✓ | | |
| 7 | **49909** | 30852103 | | ✓ | ✓ | ✓ | | | ✓ | ✓ | | |
| 8 | **49910** | 3345797 | ✓ | | ✓ | ✓ | | | ✓ | ✓ | | M12x1,5RHT |
| 9 | **59664** | 8623576 | ✓ | | ✓ | ✓ | | | ✓ | ✓ | | |
| 10 | **33924** | 30818467 | ✓ | | ✓ | ✓ | | | ✓ | ✓ | | |
| 11 | **33551/1** | 30872510 | ✓ | | ✓ | | | | ✓ | ✓ | | |
| 12 | **33550/1** | 30872511 | ✓ | | | ✓ | | | ✓ | ✓ | | |
| 13 | **49956** | 30818091 | | ✓ | ✓ | | ✓ | | ✓ | ✓ | | |
| 14 | **49957** | 30620785 | | ✓ | | ✓ | ✓ | | ✓ | ✓ | | |

## VOLVO S40
## VOLVO V40

2001→2003

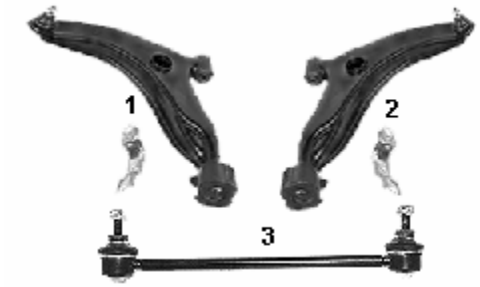


| NR | MAPCO | REF | | | ← | → | ↑ | ↓ | | | NEW | INFO |
|---|---|---|---|---|---|---|---|---|---|---|---|---|
| 1 | 49919 | 30887653 | ✓ | | ✓ | | | | ✓ | ✓ | | |
| 2 | 49920 | 30887654 | ✓ | | | ✓ | | | ✓ | ✓ | | |
| 3 | 49947HPS | 30884179 | ✓ | | ✓ | ✓ | | | ✓ | ✓ | ✓ | L= 267 mm |

## VOLVO S40 II
## VOLVO V50

01/04→
04/04→

| NR | MAPCO | REF | | | ← | → | ↑ | ↓ | | | NEW | INFO |
|---|---|---|---|---|---|---|---|---|---|---|---|---|
| 1 | 59664 | 8623576 | ✓ | | ✓ | | | | ✓ | ✓ | | |
| 2 | 59668 | 30683067 | | ✓ | ✓ | ✓ | | | ✓ | ✓ | | |
| 3 | 59646 | 8671921 | | ✓ | ✓ | ✓ | | | ✓ | ✓ | | |
| 4 | 51602 | 30714126 | ✓ | | ✓ | | | ✓ | ✓ | ✓ | ✓ | |
| 5 | 51603 | 30714127 | ✓ | | | ✓ | | ✓ | ✓ | ✓ | ✓ | |

## VOLVO S60

11/00→

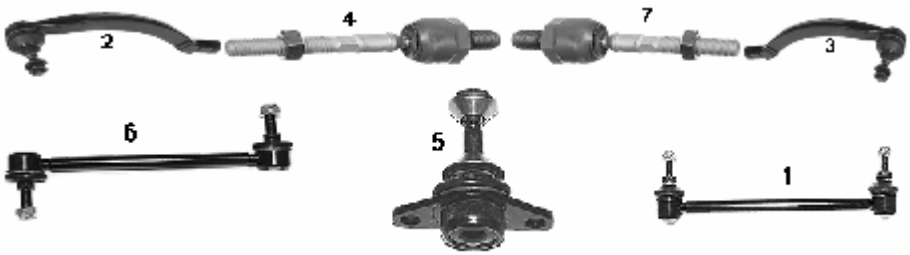


| NR | MAPCO | REF | | | ← | → | ↑ | ↓ | | | NEW | INFO |
|---|---|---|---|---|---|---|---|---|---|---|---|---|
| 1 | 49916 | 8672446 | | ✓ | ✓ | ✓ | | | ✓ | ✓ | | |
| 2 | 49921 | 274 175 | ✓ | | ✓ | | | | ✓ | ✓ | | |
| 3 | 49922 | 274 176 | ✓ | | | ✓ | | | ✓ | ✓ | | |
| 4 | 49923 | 272 428 | ✓ | | ✓ | ✓ | | | ✓ | ✓ | | M14x2,0 L= 157mm |
| 5 | 49924 | 274 186 | ✓ | | ✓ | ✓ | | | ✓ | ✓ | | |
| 6 | 49906 | 274 303 | ✓ | | ✓ | ✓ | | | ✓ | ✓ | | |
| 7 | 49927 | 274 179 | ✓ | | ✓ | ✓ | | | ✓ | ✓ | | -> 12/03 SMI M14x1,5 L= 148mm |

## VOLVO C70 , S70 — 01/97→11/00
## VOLVO V70 I Kombi — 01/97→03/00

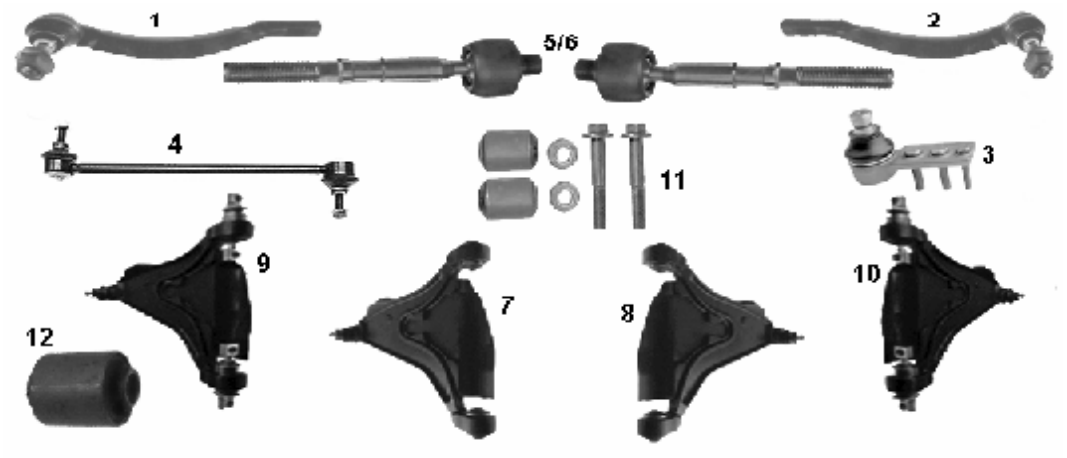


| NR | MAPCO | REF | | | ← | → | ↑ | ↓ | | | NEW | INFO |
|---|---|---|---|---|---|---|---|---|---|---|---|---|
| 1 | 19910 | 271598.5 | ✓ | | ✓ | | | | ✓ | ✓ | | M14x2,0RHT |
| 2 | 19911 | 271599.3 | ✓ | | | ✓ | | | ✓ | ✓ | | M14x2,0RHT |
| 3 | 19912 | 271591.0 | ✓ | | ✓ | ✓ | | | ✓ | ✓ | | |
| 4 | 19914HPS | 1387860 | ✓ | | ✓ | ✓ | | | ✓ | ✓ | | |
| 5 | 49917 | 3546266 | ✓ | | ✓ | ✓ | | | ✓ | ✓ | | → 2000 **TRW** |
| 6 | 49954 | 919 1410 | ✓ | | ✓ | ✓ | | | ✓ | ✓ | | L=203 mm **SMI** |
| 7 | 49912 | 271901 | ✓ | | ✓ | | | | ✓ | ✓ | | **Turbo** |
| 8 | 49913 | 271902 | ✓ | | | ✓ | | | ✓ | ✓ | | **Turbo** |
| 9 | 49914 | 272336 | ✓ | | ✓ | | | | ✓ | ✓ | | ✓ **Turbo** |
| 10 | 49915 | 272337 | ✓ | | | ✓ | | | ✓ | ✓ | | ✓ **Turbo** |
| 11 | 36975 | 271631 | ✓ | | ✓ | ✓ | | | ✓ | ✓ | ✓ | **KIT** |
| 12 | 36976 | 6800251 | ✓ | | ✓ | ✓ | | | ✓ | ✓ | ✓ | |

## VOLVO V70 II Kombi — 03/00→

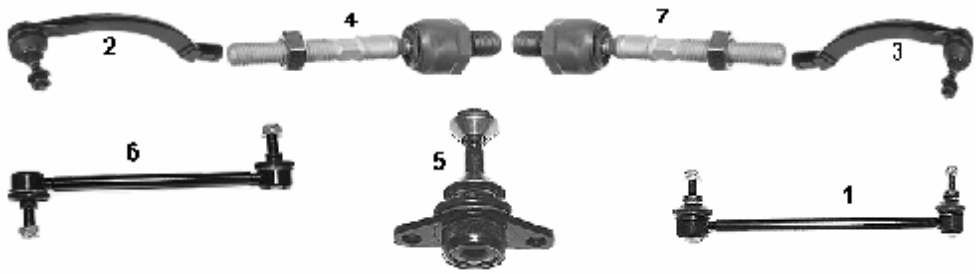


| NR | MAPCO | REF | | | ← | → | ↑ | ↓ | | | NEW | INFO |
|---|---|---|---|---|---|---|---|---|---|---|---|---|
| 1 | 49916 | 8672446 | | ✓ | ✓ | ✓ | | | ✓ | ✓ | | |
| 2 | 49921 | 274 175 | ✓ | | ✓ | | | | ✓ | ✓ | | |
| 3 | 49922 | 274 176 | ✓ | | | ✓ | | | ✓ | ✓ | | |
| 4 | 49923 | 272 428 | ✓ | | ✓ | ✓ | | | ✓ | ✓ | | M14x2,0 L= 157mm |
| 5 | 49924 | 274 186 | ✓ | | ✓ | ✓ | | | ✓ | ✓ | | |
| 6 | 49906 | 274 303 | ✓ | | ✓ | ✓ | | | ✓ | ✓ | | |
| 7 | 49927 | 274 179 | ✓ | | ✓ | ✓ | | | ✓ | ✓ | | -> 12/03 SMI M14x1,5 L= 148mm |
| | | | | | | | | | | | | |
| | | | | | | | | | | | | |

## VOLVO XC70 CROSS COUNTRY 09/02→

| NR | MAPCO | REF | | | ← | → | ↑ | ↓ | | | NEW | INFO |
|---|---|---|---|---|---|---|---|---|---|---|---|---|
| 1 | 49927 | 274 179 | ✓ | | ✓ | ✓ | | | ✓ | ✓ | | -> 12/03 SMI M14x1,5 L= 148mm 1 |

## VOLVO S80 05/98→

| NR | MAPCO | REF | | | ← | → | ↑ | ↓ | | | NEW | INFO |
|---|---|---|---|---|---|---|---|---|---|---|---|---|
| 1 | 19939 | 9 200 603 | ✓ | | ✓ | ✓ | | | ✓ | ✓ | | |
| 2 | 49916 | 8672446 | | ✓ | ✓ | ✓ | | | ✓ | ✓ | | |
| 3 | 49921 | 274 175 | ✓ | | ✓ | | | | ✓ | ✓ | | |
| 4 | 49922 | 274 176 | ✓ | | | ✓ | | | ✓ | ✓ | | |
| 5 | 49923 | 272 428 | ✓ | | ✓ | ✓ | | | ✓ | ✓ | | M14x2,0 L= 157mm |
| 6 | 49924 | 274 187 | ✓ | | ✓ | ✓ | | | ✓ | ✓ | | |
| 7 | 49906 | 274 303 | ✓ | | ✓ | ✓ | | | ✓ | ✓ | | L= 335mm |
| 8 | 49927 | 274 179 | ✓ | | ✓ | ✓ | | | ✓ | ✓ | | -> 12/03 SMI M14x1,5 L= 148mm |

## VOLVO S90 01/97→ 05/98
## VOLVO V90 Kombi 01/97→12/98

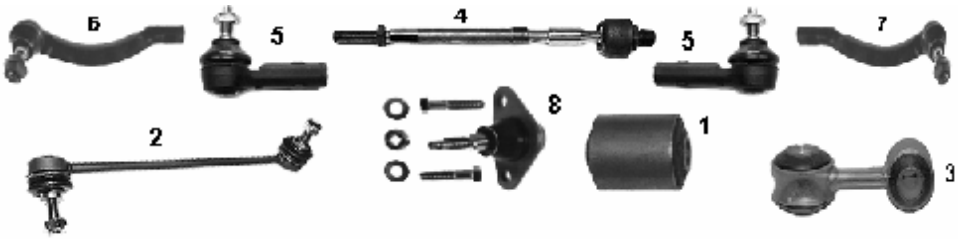


| NR | MAPCO | REF | | | ← | → | ↑ | ↓ | | | NEW | INFO |
|---|---|---|---|---|---|---|---|---|---|---|---|---|
| 1 | 33917 | 1 329 655 | ✓ | | ✓ | ✓ | | | ✓ | ✓ | | ✓ 2.9 24V |
| 2 | 19937HPS | 9 492 837 | ✓ | | ✓ | ✓ | | | ✓ | ✓ | | |
| 3 | 19938 | 3 530 304-9 | | ✓ | ✓ | ✓ | | | ✓ | ✓ | | |
| 4 | 49918 | 9 140 788F | ✓ | | ✓ | ✓ | | | ✓ | ✓ | | TRW |
| 5 | 19906 | 3516 944 | ✓ | | ✓ | ✓ | | | ✓ | ✓ | | ✓ 2.9Lt 24V 1997-> 1998 |
| 6 | 19910 | 3546 267 | ✓ | | ✓ | | | | ✓ | ✓ | | |
| 7 | 19911 | 3546 268 | ✓ | | | ✓ | | | ✓ | ✓ | | |
| 8 | 19907 | 270 477 | ✓ | | ✓ | ✓ | | | ✓ | ✓ | | |

## VOLVO XC 90 10/02→

| NR | MAPCO | REF | | | ← | → | ↑ | ↓ | | | NEW | INFO |
|---|---|---|---|---|---|---|---|---|---|---|---|---|
| 1 | 49955 | 274 523 | ✓ | | ✓ | ✓ | | | ✓ | ✓ | ✓ | 1 |